NONRESIDENT
TRAINING
COURSE

November 1996

Gunner's Mate 1 & C

NAVEDTRA 14110

Although the words "he," "him," and "his" are used sparingly in this course to enhance communication, they are not intended to be gender driven or to affront or discriminate against anyone.

PREFACE

By enrolling in this self-study course, you have demonstrated a desire to improve yourself and the Navy. Remember, however, this self-study course is only one part of the total Navy training program. Practical experience, schools, selected reading, and your desire to succeed are also necessary to successfully round out a fully meaningful training program.

COURSE OVERVIEW: In completing this nonresident training course, you will demonstrate a knowledge of the subject matter by correctly answering questions on the following subjects: Explosives and Pyrotechnics; Ammunition, Magazines, and Missile Handling; Small Arms; Basic Mechanisms; Electrical and Electronic Circuit Analysis; Gun Mounts; GMLS: Primary Functions and Descriptions and Secondary and Auxiliary Functions; SMS Guided Missiles, Aerodynamics, and Flight Principles; Target Detection and Weapon Control; Alignment; Maintenance; and Administration and Training.

THE COURSE: This self-study course is organized into subject matter areas, each containing learning objectives to help you determine what you should learn along with text and illustrations to help you understand the information. The subject matter reflects day-to-day requirements and experiences of personnel in the rating or skill area. It also reflects guidance provided by Enlisted Community Managers (ECMs) and other senior personnel, technical references, instructions, etc., and either the occupational or naval standards, which are listed in the *Manual of Navy Enlisted Manpower Personnel Classifications and Occupational Standards*, NAVPERS 18068.

THE QUESTIONS: The questions that appear in this course are designed to help you understand the material in the text.

VALUE: In completing this course, you will improve your military and professional knowledge. Importantly, it can also help you study for the Navy-wide advancement in rate examination. If you are studying and discover a reference in the text to another publication for further information, look it up.

1996 Edition Prepared by
GMC Jim Bomar, GMC Roger Null
and GMC Jerry Wallace

Published by
NAVAL EDUCATION AND TRAINING
PROFESSIONAL DEVELOPMENT
AND TECHNOLOGY CENTER

NAVSUP Logistics Tracking Number
0504-LP-026-7760

Sailor's Creed

"I am a United States Sailor.

I will support and defend the Constitution of the United States of America and I will obey the orders of those appointed over me.

I represent the fighting spirit of the Navy and those who have gone before me to defend freedom and democracy around the world.

I proudly serve my country's Navy combat team with honor, courage and commitment.

I am committed to excellence and the fair treatment of all."

CONTENTS

INSTRUCTIONS FOR TAKING THE COURSE

ASSIGNMENTS

The text pages that you are to study are listed at the beginning of each assignment. Study these pages carefully before attempting to answer the questions. Pay close attention to tables and illustrations and read the learning objectives. The learning objectives state what you should be able to do after studying the material. Answering the questions correctly helps you accomplish the objectives.

SELECTING YOUR ANSWERS

Read each question carefully, then select the BEST answer. You may refer freely to the text. The answers must be the result of your own work and decisions. You are prohibited from referring to or copying the answers of others and from giving answers to anyone else taking the course.

SUBMITTING YOUR ASSIGNMENTS

To have your assignments graded, you must be enrolled in the course with the Nonresident Training Course Administration Branch at the Naval Education and Training Professional Development and Technology Center (NETPDTC). Following enrollment, there are two ways of having your assignments graded: (1) use the Internet to submit your assignments as you complete them, or (2) send all the assignments at one time by mail to NETPDTC.

Grading on the Internet: Advantages to Internet grading are:

- you may submit your answers as soon as you complete an assignment, and
- you get your results faster; usually by the next working day (approximately 24 hours).

In addition to receiving grade results for each assignment, you will receive course completion confirmation once you have completed all the assignments. To submit your assignment answers via the Internet, go to:

http://courses.cnet.navy.mil

Grading by Mail: When you submit answer sheets by mail, send all of your assignments at one time. Do NOT submit individual answer sheets for grading. Mail all of your assignments in an envelope, which you either provide yourself or obtain from your nearest Educational Services Officer (ESO). Submit answer sheets to:

COMMANDING OFFICER
NETPDTC N331
6490 SAUFLEY FIELD ROAD
PENSACOLA FL 32559-5000

Answer Sheets: All courses include one "scannable" answer sheet for each assignment. These answer sheets are preprinted with your SSN, name, assignment number, and course number. Explanations for completing the answer sheets are on the answer sheet.

Do not use answer sheet reproductions: Use only the original answer sheets that we provide—reproductions will not work with our scanning equipment and cannot be processed.

Follow the instructions for marking your answers on the answer sheet. Be sure that blocks 1, 2, and 3 are filled in correctly. This information is necessary for your course to be properly processed and for you to receive credit for your work.

COMPLETION TIME

Courses must be completed within 12 months from the date of enrollment. This includes time required to resubmit failed assignments.

PASS/FAIL ASSIGNMENT PROCEDURES

If your overall course score is 3.2 or higher, you will pass the course and will not be required to resubmit assignments. Once your assignments have been graded you will receive course completion confirmation.

If you receive less than a 3.2 on any assignment and your overall course score is below 3.2, you will be given the opportunity to resubmit failed assignments. **You may resubmit failed assignments only once.** Internet students will receive notification when they have failed an assignment--they may then resubmit failed assignments on the web site. Internet students may view and print results for failed assignments from the web site. Students who submit by mail will receive a failing result letter and a new answer sheet for resubmission of each failed assignment.

COMPLETION CONFIRMATION

After successfully completing this course, you will receive a letter of completion.

ERRATA

Errata are used to correct minor errors or delete obsolete information in a course. Errata may also be used to provide instructions to the student. If a course has an errata, it will be included as the first page(s) after the front cover. Errata for all courses can be accessed and viewed/downloaded at:

http://www.advancement.cnet.navy.mil

STUDENT FEEDBACK QUESTIONS

We value your suggestions, questions, and criticisms on our courses. If you would like to communicate with us regarding this course, we encourage you, if possible, to use e-mail. If you write or fax, please use a copy of the Student Comment form that follows this page.

For subject matter questions:

E-mail: n315.products@cnet.navy.mil
Phone: Comm: (850) 452-1001, Ext. 1713
DSN: 922-1001, Ext. 1713
FAX: (850) 452-1370
(Do not fax answer sheets.)
Address: COMMANDING OFFICER
NETPDTC N315
6490 SAUFLEY FIELD ROAD
PENSACOLA FL 32509-5237

For enrollment, shipping, grading, or completion letter questions

E-mail: fleetservices@cnet.navy.mil
Phone: Toll Free: 877-264-8583
Comm: (850) 452-1511/1181/1859
DSN: 922-1511/1181/1859
FAX: (850) 452-1370
(Do not fax answer sheets.)
Address: COMMANDING OFFICER
NETPDTC N331
6490 SAUFLEY FIELD ROAD
PENSACOLA FL 32559-5000

NAVAL RESERVE RETIREMENT CREDIT

If you are a member of the Naval Reserve, you may earn retirement points for successfully completing this course, if authorized under current directives governing retirement of Naval Reserve personnel. For Naval Reserve retirement, this course is evaluated at 6 points. (Refer to *Administrative Procedures for Naval Reservists on Inactive Duty,* BUPERSINST 1001.39, for more information about retirement points.)

Student Comments

Course Title: *Gunner's Mate 1 & C*

NAVEDTRA: 14110 **Date**: _____

We need some information about you:

Rate/Rank and Name: _____ SSN: _____ Command/Unit _____

Street Address: _____ City: _____ State/FPO: _____ Zip _____

Your comments, suggestions, etc.:

Privacy Act Statement: Under authority of Title 5, USC 301, information regarding your military status is requested in processing your comments and in preparing a reply. This information will not be divulged without written authorization to anyone other than those within DOD for official use in determining performance.

NETPDTC 1550/41 (Rev 4-00

CHAPTER 1

EXPLOSIVES AND PYROTECHNICS

As you begin the study of the Gunner's Mate rating, you are taking the first step in joining a proud tradition of over 200 years of service. As a Gunner's Mate, you and your equipment represent the offensive power of the U.S. Navy's surface fleet. As you move into the petty officer ranks, you will wear the title of "Gunner" to all those who know and respect the responsibilities of your profession. This training manual provides a condensed version of the responsibilities and basic knowledge required of your specialty. Throughout the text, you will find references to other manuals for further study. These references are crucial to your success both on the deck plates and in competition for advancement in rate. Seek them out and become familiar with their contents.

One very important development in the history of ordnance was the discovery of explosives. In this chapter, we will discuss the fundamental characteristics of explosives and how they are classified according to their use. Then we will go into some details of various explosives and pyrotechnics used in Navy ammunition. We will conclude this chapter with a discussion of some general explosive safety requirements.

WARNING

DO NOT attempt to operate any explosive or pyrotechnic device until you are thoroughly trained and certified on that device. The information contained in this training manual should not be used to replace source publications or prescribed training procedures.

EXPLOSIVES

LEARNING OBJECTIVE Describe the characteristics and classification of explosives and propellants of naval ordnance.

To understand the composition and function of a complete round of ammunition, you need a basic knowledge of the characteristics and uses of military explosives. The demands for ammunition capable of fulfilling the many requirements of the Navy necessitates the employment of several classes of explosives. Each explosive performs in a specific manner and is used for a specific purpose. Therefore, explosives used to burst a forged steel projectile would be unsuitable as a propelling charge for ejecting and propelling projectiles. Similarly, the explosives used in initiators, such as in primers and fuzes, are so sensitive to shock that only small quantities can be used safely.

NAVSEA OP-4, *Ammunition Afloat,* defines the word *explosives* without further qualification as those substances or mixtures of substances that when suitably initiated by flame, spark, heat, electricity, friction, impact, or similar means, undergo rapid chemical reactions resulting in the rapid release of energy. The release of energy is almost invariably accompanied by a rapid and pronounced rise in pressure and temperature. The rise in pressure usually, but not necessarily, is a consequence of the rapid generation of gas in a much larger volume than that originally occupied by the explosive.

An "explosion" is defined as a practically instantaneous and violent release of energy. It results from the sudden chemical change of a solid or liquid substance into gases. These gases, expanded by the heat of the chemical change, exert tremendous pressure on their containers and the surrounding atmosphere.

HIGH AND LOW EXPLOSIVES

Military explosives are divided into two general classes, high explosives and low explosives, according to their rate of decomposition.

High Explosives

High explosives are usually nitration products of organic substances, such as toluene, phenol, pentaerythritol, arnines, glycerin, and starch, and may be nitrogen-containing inorganic substances or mixtures of both. TNT is an example of a high explosive. Ahigh explosive may be a pure compound or a mixture of several compounds with additives, such as powdered metals (aluminum), plasticizing oils, or waxes, that impart desired stability and performance characteristics. A high explosive is characterized by the extreme rapidity with which its decomposition occurs; this action is known as "detonation." When initiated by a blow or shock, it will decompose almost instantaneously

in a manner similar to an extremely rapid combustion or with rupture and rearrangement of the molecules themselves. In either case, gaseous and solid products of reaction are produced. The disruptive effect of the reaction makes these explosives valuable as a bursting charge but precludes their use as a low-explosive propellant.

Low Explosives

Low explosives are mostly solid combustible materials that decompose rapidly but do not normally detonate. This action is known as "deflagration." Upon ignition and decomposition, low explosives develop a large volume of gases that produce enough pressure to propel a projectile in a definite direction. The rate of burning is an important characteristic that depends upon such factors as combustion gas pressure, grain size and form, and composition. Under certain conditions, low explosives may be made to detonate in the same manner as high explosives.

CHARACTERISTICS OF EXPLOSIVE REACTIONS

The most important characteristics of explosive reactions are as follows:

1. VELOCITY An explosive reaction differs from ordinary combustion in the velocity of the reaction. The velocity of combustion of explosives may vary within rather wide limits, depending upon the kind of explosive substance and upon its physical state. For high explosives the velocity, or time of reaction, is high (usually in feet per second), as opposed to low explosives, where the velocity is low (usually in seconds per foot).

2. HEAT An explosive reaction of a high explosive is always accompanied by the rapid liberation of heat. The amount of heat represents the energy of the explosive and its potential for doing work.

3. GASES: The principal gaseous products of the more common explosives are carbon dioxide, carbon monoxide, water vapor, nitrogen, nitrogen oxides, hydrogen, methane, and hydrogen cyanide. Some of these gases are suffocating, some are actively poisonous, and some are combustible. For example, the flame at the muzzle of a gun when it is fired results from the burning of these gases in air. Similarly, solid residues of the explosives remaining in the gun have been known to ignite when brought into contact with air as the breech is opened. The ignition may come from high temperature of the gas or from the burning residue in the gun bore. The resulting explosion may transmit flame to the rear of the gun, producing what is called a "flareback." This danger has led to the adoption of gas-expelling devices on guns installed in enclosed compartments or mounts.

4. PRESSURE: The high pressure accompanying an explosive reaction is due to the formation of gases that are expanded by the heat liberated in the reaction. The work that the reaction is capable of performing depends upon the volume of the gases and the amount of heat liberated. The maximum pressure developed and the way in which the energy of the explosion is applied depend further upon the velocity of the reaction. When the reaction proceeds at a low velocity, the gases receive heat while being evolved, and the maximum pressure is attained comparatively late in the reaction. If in the explosion of another substance the same volume of gas is produced and the same amount of heat is liberated but at a greater velocity, the maximum pressure will be reached sooner and will be quantitatively greater. However, disregarding heat losses, the work done will be equal. The rapidity with which an explosive develops its maximum pressure is a measure of the quality known as "brisance." A brisant explosive is one in which the maximum pressure is attained so rapidly that a shock wave is formed, and the net effect is to shatter material surrounding or in contact with it. Thus brisance is a measure of the shattering ability of an explosive.

5. STABILITY The stability of an explosive is important in determining the length of time it can be kept under normal stowage conditions without deterioration and its adaptability to various military uses. A good, general explosive should stand a reasonable exposure to such extremes as high humidity in a hot climate or cold temperatures of arctic conditions.

6. IGNITION TEMPERATURES: There is no one temperature of ignition or detonation in an explosive for its behavior when heated depends on two factors: the reamer of confinement and the rate and manner of heating. It is usually possible, however, to find a small range of temperatures within which a given explosive will ignite or detonate. These so-called ignition temperatures, or explosion temperatures, are useful in setting limits near which it is certainly unsafe to heat an explosive. When an unconfined explosive is heated sufficiently, it may detonate or simply catch fire and burn. Detonation can occur either immediately or after an interval of burning. In general, the likelihood of detonation rises rapidly with increasing confinement because of the resultant rise in pressure.

7. LOADING PROPERTIES: The adaptability of an explosive to loading requirements is an important factor in fixing its range of usefulness. When projectiles are press-loaded, it is necessary to fill them with a granular explosive. On the other hand, cast-loaded munitions require either an explosive having a relatively low melting point or a thermosetting plastic to act as a casting medium.

8. SENSITIVITY: The amount of energy necessary to initiate an explosion is the measure of the sensitivity of the explosive. Sensitivity is an important consideration in selecting an explosive for a particular purpose. For example, the explosive in an armor-piercing projectile must be relatively insensitive; otherwise, the shock of impact would detonate it before it had penetrated to the point desired

INITIATION OF EXPLOSIVE REACTIONS

An explosive reaction is initiated by the application of energy. The preferred method of initiation depends on the characteristics of the individual explosive. The most commonly used methods of initiation are the following:

1. By heat: Low explosives are commonly initiated by the application of heat in some form. High explosives will react when sufficient heat is applied, especially if heat is applied suddenly throughout the mass. Initiation by percussion (direct blow) or by friction is simply initiation by heat derived from the energy of these actions.

2. By shock (detonation): High explosives in general, such as the main charges of gun projectiles, require the sudden application of a strong shock to initiate the explosive reaction. This shock or detonation is usually obtained by exploding a smaller charge of a more sensitive high explosive that is in contact with or in close proximity to the main charge. The smaller charge can readily be exploded by heat or shock.

3. By influence: It has frequently been: demonstrated that detonation of an explosive mass can be transmitted to other masses of high explosive in the vicinity without actual contact. It has been generally accepted that such transmission is caused either by the passage of an explosive percussion wave from one mass to the other or by fragments. The second explosion occurring under these conditions is said to be initiated by influence. The result is called a "sympathetic" detonation or explosion. The distance through which this action may take place varies with the kinds of explosive used, the intervening medium, and certain other conditions.

CLASSIFICATION

The classification of explosives thus far has been based on characteristics. A more practical classification, from the standpoint of the GM, is based on military uses of the explosives. These classifications are

- initiating explosives,
- booster explosives and igniters,
- propellants, and
- the main charge.

Initiating Explosives

"Initiating explosives" are those explosives that serve to initiate the ignition of propellants and the reaction of high explosives. Initiating explosives function when subjected to heat, impact, or friction. Initiating explosives may function by themselves, as does the primer cap in a small-arms cartridge. However, inmost instances the initiating charge is the lead element in what is known as an "explosive train." An explosive train uses the impulse of an initiating explosive to initiate the chain reaction that leads to the detonation of a main burster charge or ignition of a propellant.

Booster Explosives

Relatively insensitive disrupting explosives require an intermediate charge to increase the shock of the initiating explosive to ensure proper reaction of the main explosive charge. A booster increases the shock of the initiating explosive to a degree sufficient to explode the disrupting explosive.

The basic high-explosive train consists of the initiator, the booster, and the main (burster) charge. However, high-explosive trains are often compounded by the addition of intermediate charges and time delays. (See fig. l-l.) An intermediate charge functions

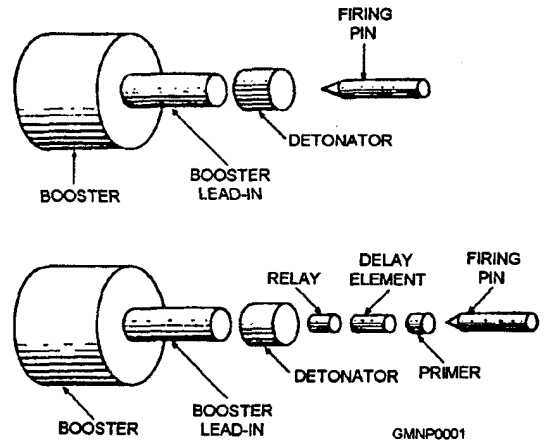

Figure 1-1.—High-explosive train.

between the initial charge and the booster to ensure the detonation of the booster.

The large quantity and relatively slow burning rate of gun propellant requires the use of another type of exposive train. The small flame produced by the initiating charge is insufficient to ignite the propellant grains thoroughly to produce an efficient burning rate of the entire charge. An explosive train consisting of an initiating charge, usually a mixture of lead styphnate and nitrocellulose (NC), detonates to ignite a small black powder booster which, in turn, ignites the larger black pow&r igniter. The black powder igniter is contained in the extension tube. Figure 1-2 shows a typical electric primer used in a propelling charge. The primer extension tube of a 5"/54 powder charge is approximately 20 inches long, contains 52 grams of black powder, and has 32 vent holes.

The devices that use initiating and booster explosives to ignite a propelling charge or detonate a projectile burster charge are called primers and detonators, respectively. Remember, the terms *primer* and *detonator* describe a device that contains explosives, not the explosives themselves.

PRIMERS.— A primer is a device used to initiate the burning of a propellant charge by means of a flame. Its explosive train normally consists of a small quantity of extremely sensitive primary high explosive which, when detonated ignites a small black powder booster which, in turn, ignites the black powder igniter. Primers are classified according to the method of initiation (normally percussion or electric). All primers function in a similar manner when initiated.

DETONATORS.— Detonators are used in initiating high-explosive bursting charges. They are similar to primers in that they also contain a small quantity of extremely sensitive initiating explosives. However, a detonator will use a high-explosive booster usually made of a more stable substance than the initiating charge but less stable than the main burster. Detonators are also classified according to the methods of initiation, usually electric or percussion.

Propellants

The primary function of a propellant is to provide a pressure that, acting against an object to be propelled, will accelerate the object to the required velocity. This pressure must be controlled so that it will never exceed the strength of the container in which it is produced, such as guns, rocket motor housing, or pyrotechnic pistols. In addition, propellants must be comparatively insensitive to shock Propellants maybe either liquid or solid (Liquid propellants will not be discussed here, since only solid propellants are used in Navy gun ammunition.)

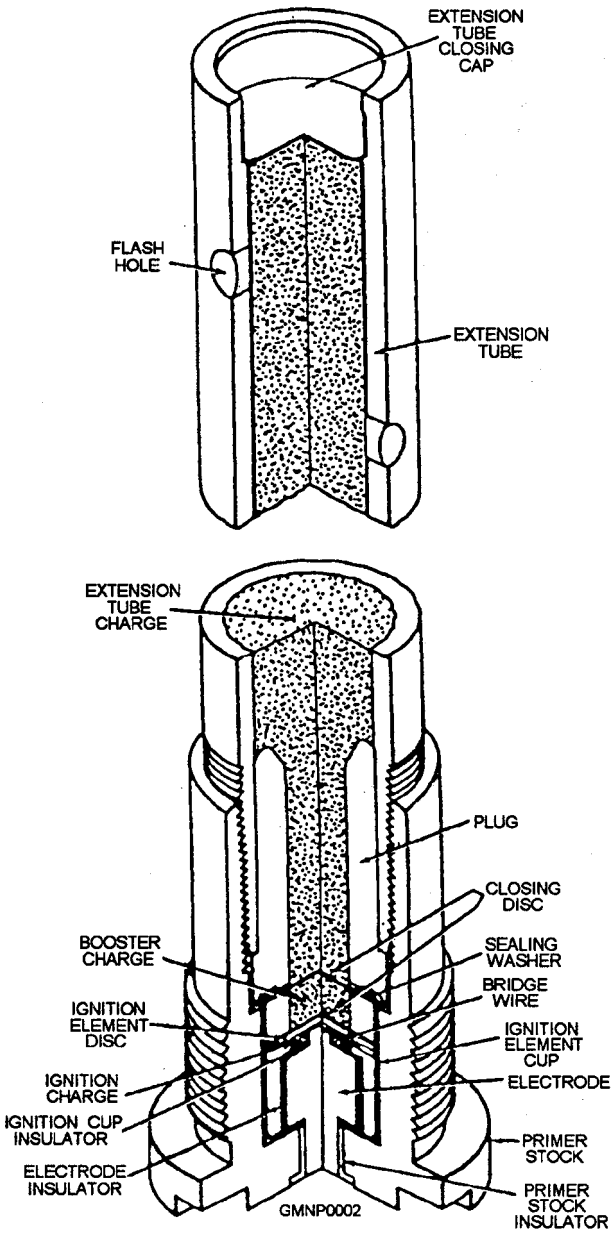

Figure l-2.—Typical case electric primer.

Propellants can be classified by such terms as single-base, double-base, triple-base, and composite. Single-base propellants contain only one explosive ingredient, NC. Double-base and triple-base propellants contain, respectively, nitroglycerine (NG) and nitroguanidine (NQ) in addition to NC. Composite propellants are compositions that contain mixtures of fuel and inorganic oxidants. There are combinations of composite and double-base propellants called composite double-base propellants.

Solid propellants are manufactured in the form of flakes, balls, sheets, cords, or perforated cylindrical grains. They are made in various shapes to obtain different types of burning actions. In large guns, 40 mm and over, a cylindrical grain with seven perforations is used, while 20-mm guns use a single perforation. Smaller calibers, including small arms, use flake or ball grains. The cylindrical grains are made in various diameters and lengths, but size is normally stated in web thickness. (See fig. 1-3.) The different types of burning actions are regressive, neutral, and progressive. A propellant is said to be "regressive burning" when the surface area of the grains decrease as they burn. An example of a "neutral burning" grain is a single perforated grain whose inner surface increases and whose outer surface decreases as it burns. The result of these two actions is that the total surface remains the same. As a multiperforated grain burns, its total burning area increases since it burns from the inside to the outside at the same time. Thus it is called "progressive burning."

Main Charge

The main charge for explosive projectiles, bombs, mines, torpedo warheads, and other bomb type of ammunition is always a high explosive. These substances must meet certain requirements for military use. In general, they must do the following:

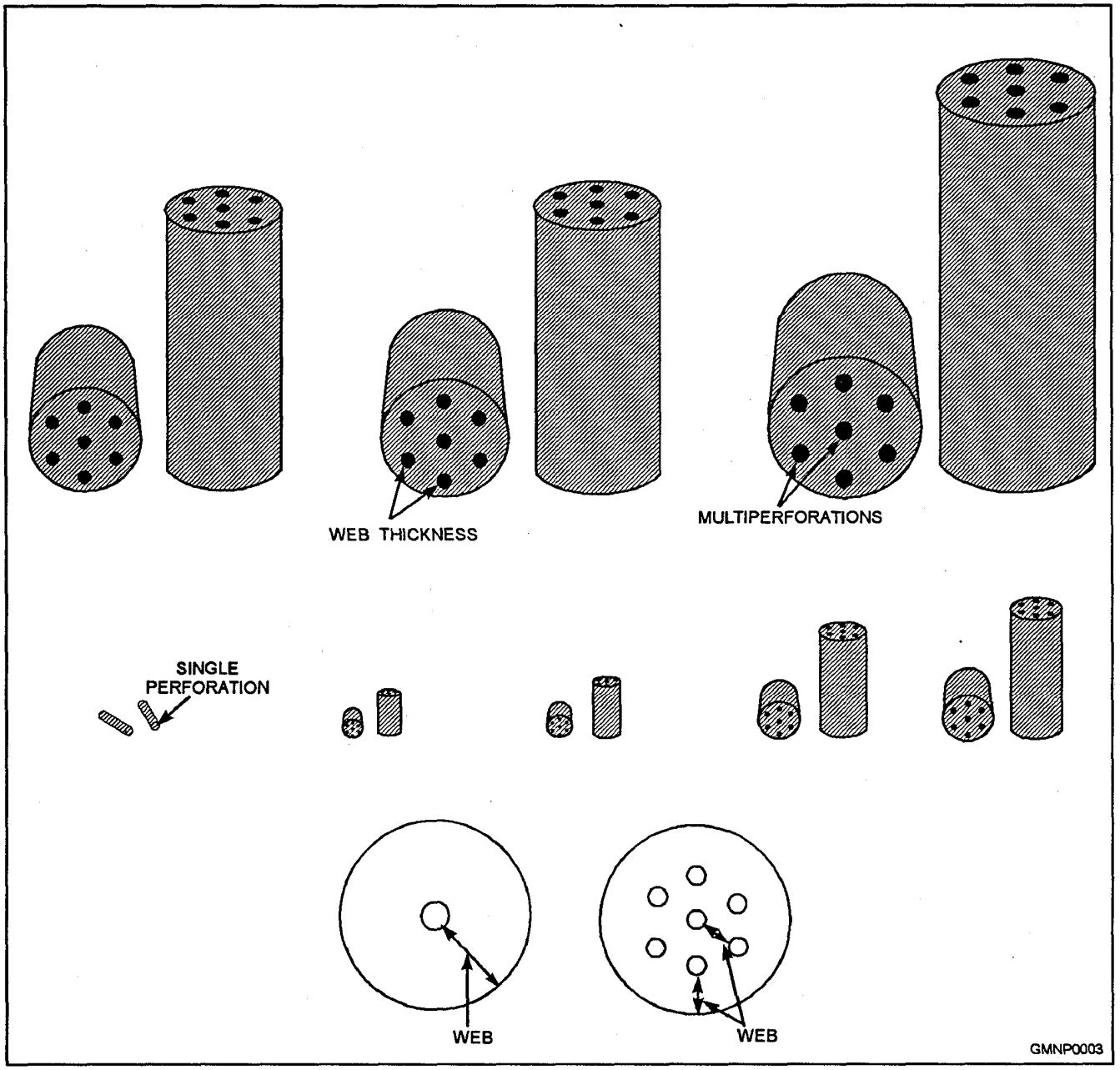

Figure 1-3.—Solid propellant grains.

1. Be insensitive enough to withstand the shock of handling, of being fired from a gun, and of impact against armor (only in armor-piercing projectiles).

2. Have maximum explosive power.

3. Have stability to withstand adverse stowage conditions.

4. Produce proper fragmentation (only for fragmentation weapons).

5. Be inexpensive and easy to manufacture from readily available materials.

High-explosive charges are loaded into their containers by one of three methods--cast-loading, press-loading, and extrusion. Cast-loading is performed by pouring the substance as a liquid into a container and letting it solidify. Explosives having no liquid form must be press-loaded (pressed into their container) or incorporated into a liquid casting medium. The combining of certain explosives with plastic binders results in plastic mixtures that can be loaded either by casting or by extrusion. Specific compounds of these explosives are described in the following section.

SERVICE EXPLOSIVES AND THEIR USE

LEARNING OBJECTIVE Discuss the composition and characteristics of service explosives and their use.

Service explosives as used in the Navy are varied and subject to periodic change. However, there are certain basic explosives that have become fairly standard throughout the Navy. A few of the more pertinent explosives and their uses are discussed in the following paragraphs.

BLACK POWDER

Black powder is the oldest explosive known. The ingredients in black powder include saltpeter (potassium nitrate or sodium nitrate), charcoal, and sulfur. It ignites spontaneously at about 300°C (540°F) and develops a fairly high temperature of combustion: 2300°C to 3800°C (4172°F to 6782°F).

The chemical stability of black power impractically unlimited when stored in airtight containers, but it deteriorates irregularly when exposed to moisture, which it absorbs readily. The term *hygroscopic* applies to explosives that easily absorb moisture.

Black powder is not affected by moderately high temperatures, and it is not subject to spontaneous combustion at ordinary stowage temperatures. It is highly flammable and very sensitive to friction, shock, sparks, and flame. When black powder is ignited, it is extremely quick and violent in its action.

The Navy classifies black powder into two types (potassium nitrate and sodium nitrate), depending on the chemical compound used in the base material. These two types are further divided into classes identified by numbers 1 through 9 for potassium nitrate-based black powder and by letters *A* through *C* for sodium nitrate-based black powder.

Uses of Black Powder

The range of use of black powder has decreased with the development of new chemical compounds but, where smoke is no objection, black powder is considered by many to be the best substance available for transmitting flame and producing a quick, hot flame.

Currently, black powder is used by the Navy for the following purposes:

- Classes 1 through 9: JATO, rocket igniters, igniter pads, ignition ends for bag charges, primers, propelling charges for line-throwing guns, expelling charges for base-ejection shells, pyrotechnic items, relay pellets, igniting charges for illuminating candles, charges in target practice shells, igniter charges in primer detonators, fuze-delay elements, tracer igniters, delay and igniter charges in primer detonators, practice hand grenade fuzes, and Navy squibs.

- Classes A through C: Saluting charges, practice bombs, and torpedo impulse charges.

Black Powder as a Propellant

Black powder as a gun propellant has several disadvantages: (1) it leaves a large amount of residue, (2) it produces large quantities of smoke, (3) it causes rapid erosion of the gun bore, and (4) its velocity of reaction is too rapid. For these reasons and the fact that black powder charges do not provide the reproducible results required of modern guns, it was abandoned as a propellant around 1888. This abandonment was hastened by the development of NC.

NITROCELLULOSE (NC)

NC was first prepared in 1838. However, two main problems had to be solved before it could be used as a gun propellant. First, the velocity of the explosion had to be reduced so that the charge weight required to propel the projectile would not shatter the gun tube.

second, the density had to be increased so that a given charge weight would pack into a reasonable space. The first problem was solved in part by igniting NC instead of firing it with a detonator. The solution to the second problem actually solved both. In 1886, Vielle first colloided or gelatinized NC with alcohol and ether and, thus reduced the burning rate to acceptable levels. The procedure significantly increased the loading density of NC, establishing it as the foundational element in gun propellants used through the present day. Further developments resulted in materials that could be added to improve stowage qualities, reduce or eliminate flash, reduce hygroscopicity, reduce flame temperature, and even increase the propellant force or impetus.

SMOKELESS POWDER

Smokeless powder is the propellant used in the propelling charges for Navy gun ammunition. It is a uniform ether-alcohol colloid of purified NC to which is added a small quantity of diphenylamine or ethyl centrality to assist in preserving the stability of the powder. Smokeless powder is basically unstable since it contains NC and two volatile substances-ether and alcohol. Its length of usefulness depends largely on the conditions under which it is stowed. Moisture or heat speeds its deterioration; a combination of the two has extremely damaging effects.

Classification of Smokeless Powder

Smokeless powder is classified into two types: single-base and multibase.

SINGLE-BASE POWDER.— Single-base powder consists of colloided NC with other materials added to obtain suitable form, burning character, and stability. Several single-base propellants are in use today.

MULTIBASE POWDER.— Multibase powder uses NG and/or NQ in addition to NC as explosive ingredients. Such propellants are commonly called double-base (NC and NG) and triple-base (NC, NG, and NQ). One double-base and one triple-base propellant are in use today.

Index of Smokeless Powder

Smokeless powder types are assigned class designation letters that designate the chemical makeup of the powder as follows:

SP - Smokeless powder

B - Blended

C - Stabilized by ethyl centrality

D - Stabilized by diphenylamine

F - Flashless powder

G - Includes nitroglycerine and nitroguanidine

N - Nonhygroscopic

W - Reworked by grinding

X - Water-drying process

These letters are followed by a number that indicates the sequence of manufacture. The combination of the letters and the number is termed the *index* or the lot of the powder. The combinations of the class designation letters are described below.

SPC.— SPC is a cool-burning, single-base smokeless powder *(SP) with* ethyl centrality *(C)* as a stabilizer.

SPCF.— SPCF is a single-base smokeless powder similar to SPC type of powder but containing a flash suppressor to render the powder flashless. SPCF is found in all 5"/54 universal charge, full-service propelling charges.

SPCG.— SPCG is a multibase smokeless powder stabilized with ethyl centrality and includes NG and NQ in its composition. Although the designation letter for flashless powder (F) is not used, SPCG is a flashless powder.

SPD.— SPD is a single-base smokeless powder stabilized with diphenylamine.

SPDB.— SPDB is a blend of diphenylamine-stabilized powders of different lots. The purpose of blending is to provide a uniform index of ample size and desired character from smaller remnant lots.

SPDF.— SPDF is a diphenylamine-stabilized smokeless powder to which a flash inhibitor, such as potassium sulfate, has been added.

SPDN.— SPDN is a diphenylamine-stabilized smokeless powder to which nonvolatile materials are added to reduce the' hydroscopic tendencies of the propellant. The N stands for nonhygroscopic.

SPDX.— SPDX is a diphenylamine-stabilized smokeless powder that is water-dried. In the water-drying process, the powder is seasoned in tanks of warm water to remove volatile solvents, followed by a brief period of air drying.

SPWF.— SPWF is a flashless powder made by the reworking of ordinary nonflashless powder.

M-6 and M-6+2.—M-6 and M-6+2 propellant designations equate to the SPDN and SPDF (respectively) descriptions previously provided. These designations are used to describe the propellants used in 76-mm ammunition. The +2 refers to a 2% mixture of potassium sulfate.

PRIMARY (INITIATING) EXPLOSIVES

The explosives used as initiating explosives are the primary high explosives mentioned previously in this chapter. They are used in varying amounts in the different primers and detonators used by the Navy and may differ some insensitivity and in the amount of heat given off. The explosives discussed in this section are lead azide, lead, styphnate, and diazodinitrophenol (DDNP).

Lead Azide

Lead azide has a high-ignition temperature and is today the most commonly used primary explosive.

Lead azide is poisonous, slightly soluble in hot water and in alcohol, and highly soluble in a diluted solution of nitric or acetic acid in which a little sodium nitrate has been dissolved It reacts with copper, zinc, cadmium, or alloys containing such metals, forming an azide that is more sensitive than the original lead tide. Because lead azide does not react with aluminum, detonator capsules for lead azide are made of this metal. The hygroscopicity of lead azide is very low. Water does not reduce its impact sensitivity, as is the case with mercury fulminate. Ammonium acetate and sodium bichromate are used to destroy small quantities of lead azide. Lead tide may be used where detonation is caused by flame or heat. The velocity of detonation is approximately 17,500 feet per second (fps). Its color varies from white to buff. Lead azide is widely used as an initiating explosive in high-explosive detonator devices.

Lead azide, when protected from humidity, is completely stable in stowage.

Lead Styphnate

There are two forms of lead styphnate—the normal that appears as six-sided monohydrate crystals and the basic that appears as small, rectangular crystals. Lead styphnate is particularly sensitive to fire and the discharge of static electricity. When the styphnate is dry, it can readily ignite by static discharges from the human body. The longer and narrower the crystals, the more susceptible the material is to static electricity. Lead styphnate does not react with metals. It is less sensitive to shock and fiction than lead azide. Lead styphnate is slightly soluble in water and methyl alcohol and may be neutralized by a solution of sodium carbonate. The velocity of detonation is approximately 17,000 fps. The color of lead styphnate varies from yellow to brown. Lead styphnate is used as an initiating explosive in propellant primer and high-explosive detonator devices.

Diazodinitrophenol (DDNP)

DDNP is a yellowish brown powder. It is soluble in acetic acid, acetone, strong hydrochloric acid, and most of the solvents, but is insoluble in water. A cold sodium hydroxide solution may be used to destroy it. DDNP is desensitized by immersion in water and does not react with it at normal temperatures. It is less sensitive to impact but more powerful than lead tide. The sensitivity of DDNPto friction is approximately the same as that of lead tide.

DDNP is often used as an initiating explosive in propellant primer devices.

BOOSTER EXPLOSIVES

Booster explosives are those components of the explosive train that function to transmit and augment the force and flame from the initiating explosive. They ensure the reliable detonation or burning of the main burster charge or propellant charge. Propelling charges use a black powder booster, while high-explosive boosters use one of the following: Tetryl, CH-6, or Composition A-5.

Tetryl

Tetryl is a fine yellow crystalline material. When tetryl is heated, it first melts, then decomposes and explodes. It burns readily and is more easily detonated than explosive D.

CH-6

CH-6 is a mixture of 97.5% RDX (described in the next section), 1.5% calcium stearate, 0.5% polyisobutylene, and 0.5% graphite. It is a finely divided gray powder that is less toxic and more available than tetryl.

Composition A-5

Composition A-5 is a mixture of 98.5% RDX and 1.5% stearic acid.

MAIN-CHARGE (BURSTER) EXPLOSIVES

There are several high explosives currently used by the Navy as fillers for gun projectiles. The principal explosives are Composition A-3, RDX, and explosive D. These explosives, when combined in various

percentages and combinations, produce numerous high explosives with varying degrees of sensitivity, brisance, rate of detonation, and other pertinent characteristics. These principal explosives, and some of their more common derivative explosives, are discussed in the following paragraphs, as well as some explosives that are no longer being used but may still be in some ammunition stocks.

Trinitrotoluene (TNT)

TNT is a crystalline substance. The importance of TNT as a military explosive is based upon its relative safety in manufacture, loading, transportation, and stowage, and upon its explosive properties. Manufacturing yields are high and production relatively economical. The chemical names for TNT are trinitrotoluene and trinitrotol. Other (commercial) names are Trilite, Tolite, Trinol, Trotyl, Tritolol, Tritone, Trotol, and Triton.

TNT is toxic, odorless, comparatively stable, nonhygroscopic, and relatively insensitive. When TNT is pure, it is known as grade A TNT and varies from white to pale yellow. When the proportion of impurities is much greater, the color is darker, often brown, and the chemical is known as grade B TNT. It maybe ignited by impact, friction, spark, shock, or heat. TNT does not form sensitive compounds with most metals. The melting point varies between 80.6°C for grade A (refined TNT) and 76°C for grade B (crude TNT). TNT does not appear to be affected by acids but is affected by alkalies (lye, washing soda, and so on), becoming pink, red, or brown, and more sensitive. It is practically insoluble in water, but soluble in alcohol, ether, benzene, carbon disulfide, acetone, and certain other solvents. The velocity of detonation is approximately 22,300 fps.

Exudate has been known to separate from cast TNT. It may appear pale yellow to brown and may vary in consistency from an oily liquid to a sticky substance. The amount and rate of separation depend primarily upon the purity of the TNT and, secondarily, upon the temperature of the stowage place. Grade B (low-melting point) TNT may exude considerable liquid and generate some gas. This exudation is accelerated with an increase in temperature.

Pure TNT will not exude since exudate consists of impurities that have not been extracted in the refining process. Exudate is a mixture of lower melting isomers of TNT, nitrocompounds of toluene of lower nitration, and possible nitrocompounds of other aromatic hydrocarbons and alcohols. It is flammable and has high sensitivity to percussion when mixed with absorbents. Its presence does no appreciable harm to the stability but somewhat reduces the explosive force of the main charge. In some ammunition, an inert wax pad is used in the loading operation, and, in some cases, waxy material may ooze from the case. It should not be confused with the TNT exudate previously described. This material should, however, be tested for TNT to confirm its actual composition,

TNT exudate, when mixed with a combustible material, such as wood chips, sawdust, or cotton waste, will form a low explosive that is highly flammable and ignites easily from a small flame. It can be exploded in a reamer similar to a low grade of dynamite, but the main danger is its fire hazard. Accumulation of exudate is considered a great risk of explosion and fire. Its accumulation should always be avoided by continual removal and disposal as it occurs. While TNT is no longer used in Navy gun ammunition, some 3"/50, 40-mm, and 20-mm stocks loaded with TNT may still be in the inventory. These stocks should be identified and checked periodically for the presence of exudate.

The exudate is soluble in acetone or alcohol. One of these solvents (requiring adequate ventilation) or clean, hot water should be used to facilitate removal and disposal of the exudate.

WARNING

Under no circumstances should soap or other alkaline preparations be used to remove this exudate. The addition of a small amount of hydroxide, caustic soda, or potash will sensitize TNT and cause it to explode if heated to 160°F.

HMX (Cyclotetramethylene Tetranitramine)

HMX was discovered as a by-product in the production of RDX. Although it is almost as sensitive and powerful as RDX, it is seldom used alone in military applications but is normally mixed with another compound, such as TNT. In the Navy, HMX is used as an ingredient in plastic-bonded explosives.

RDX (Cyclotrimethylene Trinitramine)

RDX, also known as Cyclonite or Hexogen, is considered the most powerfid and brisant of the military high explosives. It is also one of the most used high explosives in Navy munitions.

RDX is a white crystalline solid that has a high degree of stability in stowage. It is usually used in mixtures with other explosives, desensitizers, or

plasticizers. The most used compositions of RDX are included in the following paragraphs.

COMPOSITION A-3.— Composition A-3 is a wax-coated, granular explosive, consisting of 91% RDX and 9% desensitizing wax.

Composition A-3 is not melted or cast. It is pressed into projectiles. It is nonhygroscopic and possesses satisfactory stowage properties. Composition A-3 is appreciably more brisant and powerful than TNT; its velocity of detonation is approximately 27,000 fps. It may be white or buff, depending upon the color of the wax used to coat the powdered RDX.

Composition A-3 is used as a fillerinprojectiles that contain a small burster cavity, such as antiaircraft projectiles. It can be used as compressed fillers for medium-caliber projectiles.

COMPOSITION B.— Composition B is a mixture of 59% RDX, 40% TNT, and 1% wax. The TNT reduces the sensitivity of the RDX to a safe degree and, because of its melting point, allows the material to be cast-loaded.

The blast energy of Composition B is slightly higher than that of TNT. Composition B is nonhygroscopic and remains stable in stowage. It has an extremely high-shaped-charge efficiency. The velocity of detonation is approximately 24,000 fps, and its color ranges from yellow to brown.

Composition B has been used as a more powerful replacement for TNT in loading some of the rifle grenades and some rocket heads. It can be used where an explosive with more power and brisance is of tactical advantage and there is no objection to a slight increase of sensitivity.

While no longer used in newer gun projectiles, some older stocks may be found with Composition B main charges.

COMPOSITION C.— Compositior C-3 is one of the Composition C series that has now been replaced by C-4, especially for loading shaped charges. However, quantities of Composition C-1 and Composition C-2 may be found in the field. Composition C-1 is 88.3% RDX and 11.7% plasticizing oil. Composition C-3 is 77% RDX, 3% tetryl, 4% TNT, 1% NC, 5% MNT (mononitrotoluol), and 10% DNT (dinitrotoluol). The last two compounds, while they are explosives, are oily liquids and plasticize the mixture. The essential difference between Composition C-3 and Composition C-2 is the substitution of 3% tetryl for 3% RDX, which improves the plastic qualities. The changes were made in an effort to obtain a plastic, puttylike composition to meet the requirements of an ideal explosive for molded and shaped charges that will maintain its plasticity over a wide range of temperatures and not exude oil.

Composition C-3 is about 1.35 times as powerful as TNT. The melting point of Composition C-3 is 68°C, and it is soluble in acetone. The velocity of detonation is approximate y 26,000 fps. Its color is light brown.

As with Composition B, Composition C is no longer being used as a gun projectile main charge. However, some stocks may still be in service with Composition C-3 used as a main charge.

Explosive D

Explosive D (ammonium picrate) is a yellow crystalline material. It is less sensitive than TNT or Composition A-3 and is generally used in projectiles that must penetrate hard targets, such as armor, without detonating.

Plastic-Bonded Explosives (PBXs)

PBXs are relatively new types of explosive compositions that have found increased use in naval weapons. They are generally made of an explosive compound like RDX or HMX incorporated into either an energetic or inert plastic binder.

PBXN-5

PBXN-5 is referred to as a plastic-bonded explosive because it is an explosive coated with plastic material. The composition is made of 95% HMX and 5% fluoroelastomers.

PBXN-106

This explosive is one of the new plastic-bonded explosives. It is a cast-cured explosive composition made from a homogeneous mixture of RDX in a plasticized polyurethane rubber matrix. Once cured, the material cannot be easily restored to a liquid state. The finished material is flexible and will absorb considerably more mechanical shock than conventional cast or pressed explosives.

PYROTECHNICS

LEARNING OBJECTIVE Discuss the common pyrotechnic devices currently in use on modem Navy surface ships.

Pyrotechnic is the Greek word for fireworks. The Navy uses fireworks not for celebration, but for illumination, marking, and signaling. An example is the illuminating projectile, or star shell, used to illuminate targets for gunfire. A star shell actually is a pyrotechnic device, although it is encased in a projectile body of standard external shape and is fired from a standard rifled gun.

In the following sections we will discuss the common pyrotechnic devices currently in use on modern Navy surface ships. For further information on these and other pyrotechnic devices used by the Navy, refer to *Pyrotechnic, Screening, Marking, and Countermeasure Devices,* NAVSEA SW050-AB-MMA-010. All the pyrotechnics we study here are intended for signaling and marking. In the following sections, we will discuss common

1. marine location markers,
2. marine illumination signals and the pyrotechnic pistols and projectiles used in firing them, and
3. distress and hand signals.

Also, at the end of this section on pyrotechnics, we will provide some basic information on the proper handling and stowage of these devices.

MARINE LOCATION MARKERS

Marine location markers are used as night or day long-burning referenee markings on the surface of the ocean. They are dropped over the side from surface ships for man-overboard marking, navigation drills, and other similar operations. These markers may also be dropped from aircraft for search and rescue operations. The two marine location markers currently in use are the Mk 58 and the Mk 6.

Mk 58 Marine Location Marker

The Mk 58 marine location marker is the primary marine location marker found aboard surface vessels. It is approximately 21 1/2 inches long and weighs about 123/4 pounds. It contains a battery squib, some starter mix, two pyrotechnic candles, and a transfer fuse between the two candles. Before launching, the tear tape over the water port must be removed so that seawater can enter to activate the battery. Battery current energizes the electric squib, which ignites the starter mix, which, in turn, lights the pyrotechnic candle. When the first candle has burned out (in 20 to 30 minutes), the second candle is started by the transfer fuze for a total burning time of approximately 40 to 60 minutes. The Mk 58 currently is available in two versions: the Mod O and the Mod 1. The Mod O is a hermetically sealed can that is opened with a twist key. Figure 1-4 shows this

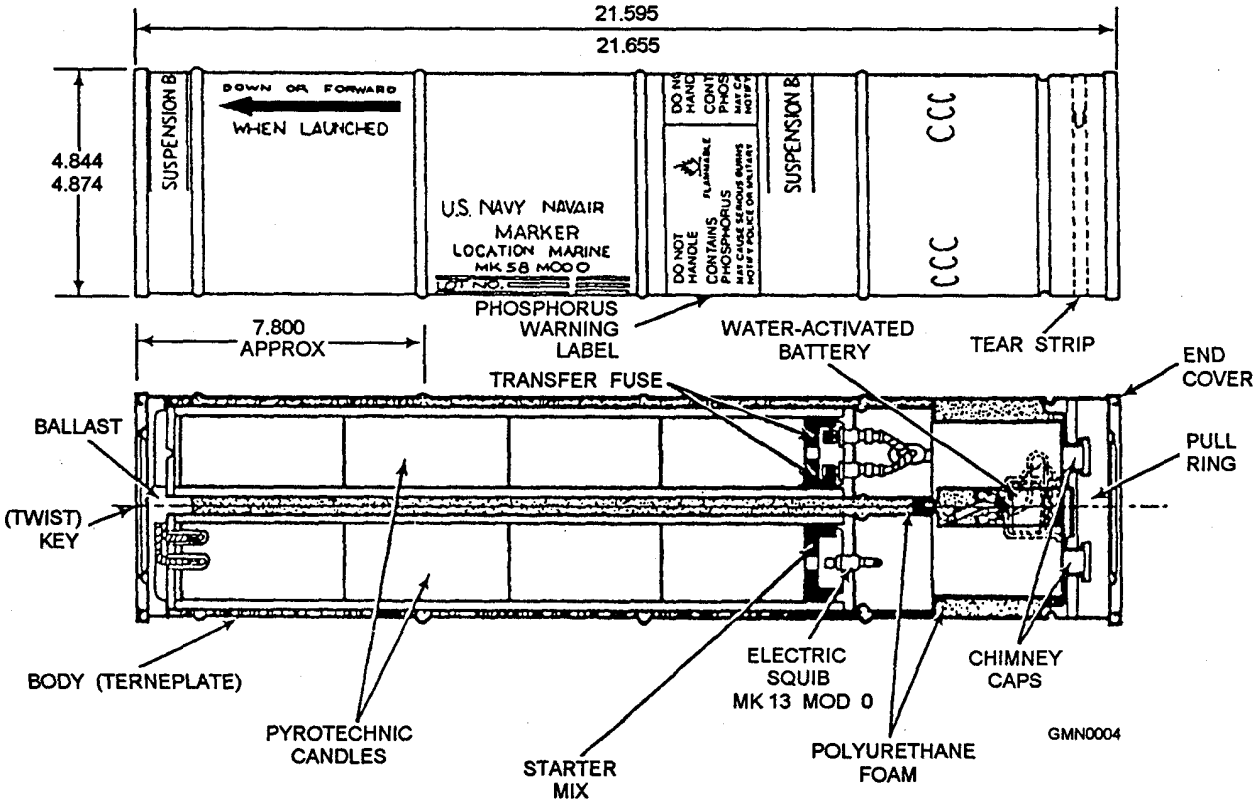

Figure 1-4.—The Mk 58 Mod 0 marine location marker.

marker. The Mod 1 (fig. 1-5) is capped with a replaceable polyethylene cover.

Mk 6 Marine Location Marker

The Mk 6 aircraft smoke and illumination signal (fig. 1-6) is a pyrotechnic device that is launched from surface craft only to produce a day or night floating reference point. One of its principal uses is as a man-overboard marker. It was previously approved for launching from low-performance aircraft as a long-burning marker but has been replaced for this purpose by the Mk 58 marine location marker.

The Mk 6 signal consists of a wooden body with a flat, die-cast metal plate affixed to one end to protect it from water impact damage and to maintain it in the correct floating attitude. There are four flame and smoke emission holes in the opposite end, each capped and sealed with tape. The pull-wire ring, also at the emission end, is also covered with tape.

The Mk 6 signal has a direct-firing ignition system. Ignition results from pulling the pull ring. The pull ring is pulled by hand, and the device is thrown into the water immediately. The pull wire ignites a 90-second delay fuse that ignites the quick match at the top of the first of four candles. The quick match ignites the first candle starting mix, which, in turn, initiates burning of that candle. Expanding gases of combustion force the cap and tape from the emission hole, allowing smoke and flame to be emitted When the first candle is nearly burned out, a transfer fuse carries the ignition to the quick match of the next candle in series. This process continues until all four candles have burned. The yellow flame and gray-white smoke are produced for a minimum of 40 minutes.

After the tear strip on the shipping container has been removed, the following rules apply:

1. The tape over the pull ring should not be disturbed until immediately before hand launching the signal. This tape not only prevents an accidental pull on the pull ring but also protects the igniter assembly from moisture, which might render the signal useless.

WARNING

This signal is initiated by the physical movement of a friction wire through ignition compound Extreme care must be taken to prevent tension of the pull ring during all handling operations.

2. If this device is prepared for launching and is not launched, the pull ring should be securely retaped into

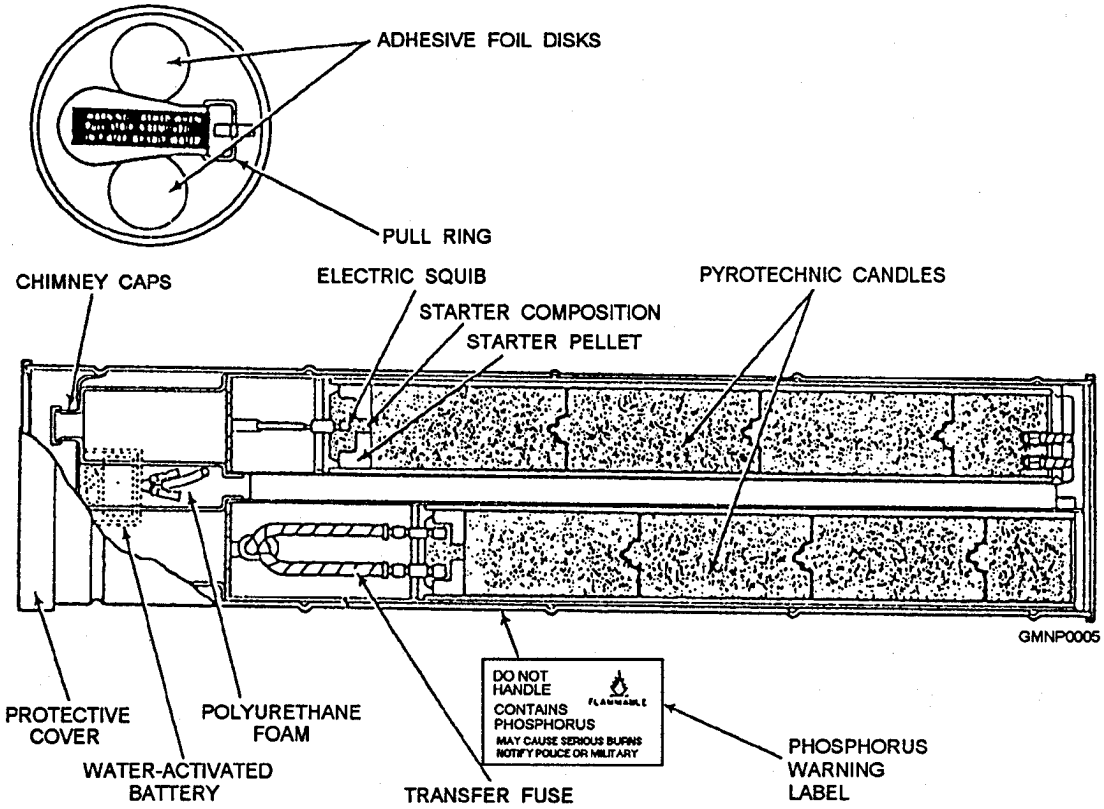

Figure 1-5.—The Mk 58 Mod 1 marine location marker.

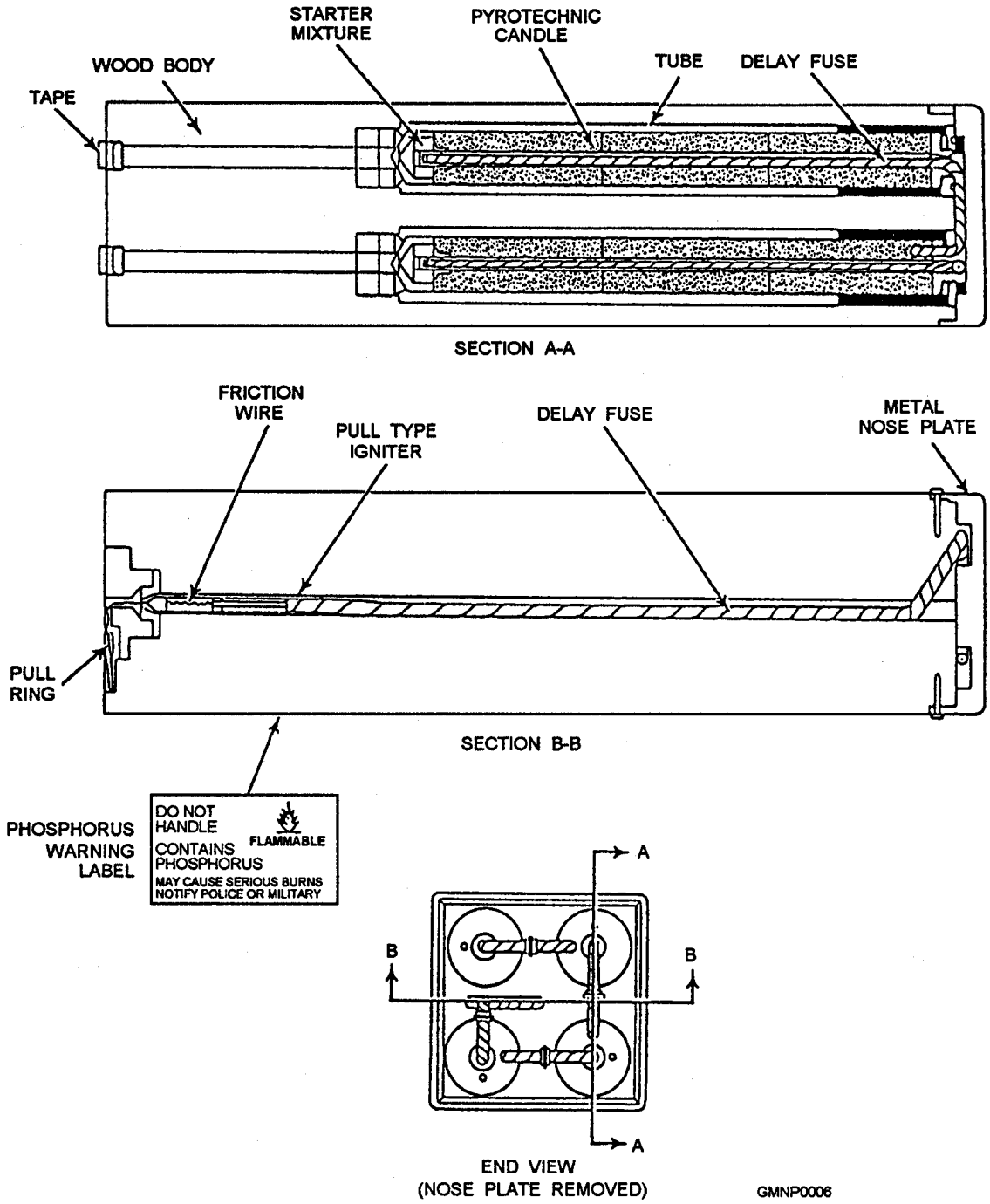

Figure 1-6.—The Mk 6 Mod 3 marine location marker.

position at the top of the signal without exerting any pulling force on the pull-wire igniter.

3. Under no circumstances should these signals be stowed or restowed with their pull rings exposed or with any wires, strings, or other material of any kind joined to their pull rings.

All safety precautions pertaining to this signal must be observed. In addition, the following specific rules apply:

1. Do not remove the tape over the pull ring until immediately before launching.

2. The Mk 6 signal should be thrown over the side immediate y after pulling the pull ring. This device contains a maximum 90-second delay element between initiation and candle ignition.

3. In all handling, extreme care should be taken to avoid pulling on the pull ring. The slightest movement of the friction igniter may start the ignition train.

The Mk 6 marine location marker is being replaced by the Mk 58. There are, however, remaining serviceable stocks of the Mk 6 available. If you have any of these markers in your inventory, they should be used first. Man-overboard and navigation drills are good instances where these stocks can be efficiently expended.

MARINE ILLUMINATION AND SMOKE SIGNALS AND PYROTECHNIC PISTOLS

Marine illumination signals are similar in appearance to a standard shotgun cartridge. When fired from the proper pistol or projector, a burning star (somewhat like a star from a Roman candle) shoots high into the air. In this section, we will describe the marine illumination and smoke signals and pyrotechnic pistols currently in use. These include the

1. Mk 2 marine illumination signal,
2. Mk 5 pyrotechnic pistol,
3. AN-M37A2 through AN-M39A2 series, double-star illumination signal,
4. Mk 1 marine illumination signal, and
5. AN-M8 pyrotechnic pistol.

Mk 2 Marine Illumination Signal

The Mk 2 marine illumination signal is available in three colors: red, green, and white. Each cartridge has a percussion primer and a propelling or expelling charge of ten grains of black powder, which projects the burning star to a height of about 200 feet. The star charge is a tightly packed cylinder wrapped with a quick match (a fast-burning fuse) that ignites it when fired. The star charge is separated from the expelling charge by a shock-absorbing wad of hard felt. The cartridge is closed by a wad that is so marked that color of the star can be determined at night by feeling it, as shown in figure 1-7.

The red star may be identified by its corrugated closing wad, the green star has a smooth closing wad, and the white has a small conical boss on its closing wad. Each of the three colors may also be identified by the corresponding color of the paper on the cartridge.

The burning time for each of the stars is approximately 6 seconds.

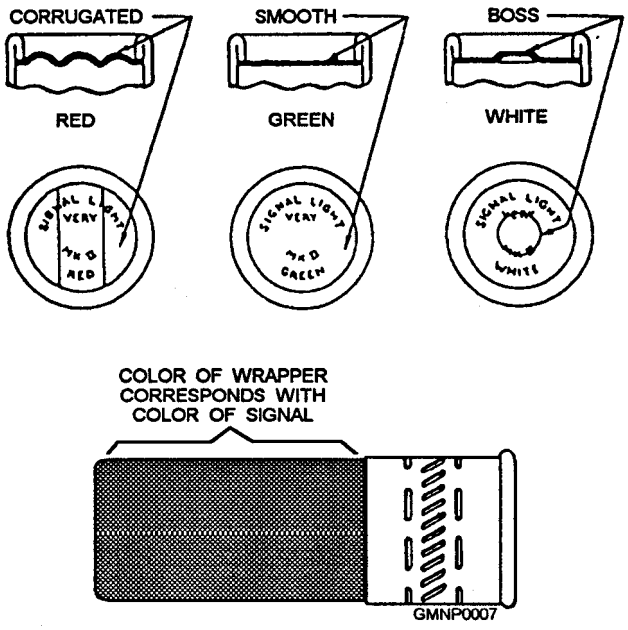

Figure **1-7.—The Mk 2 marine illumination signal.**

The illumination signals are available in ten round metal or cardboard containers. The containers are packaged in wooden boxes that hold 40, 45, or 100 containers.

Mk 5 Pyrotechnic Pistol

Mk 2 marine illumination signals are fired from the Mk 5 pyrotechnic pistol. This pistol is a breech-loaded, double-action, single-shot device, 11 inches long. Metal parts are mounted on a plastic frame. The operating instructions for the Mk 5 pistol are as follows:

1. To load the pistol, depress the latch button below the barrel. At the same time, pull the barrel downward, as show in figure 1-8, view A. Insert the signal shell

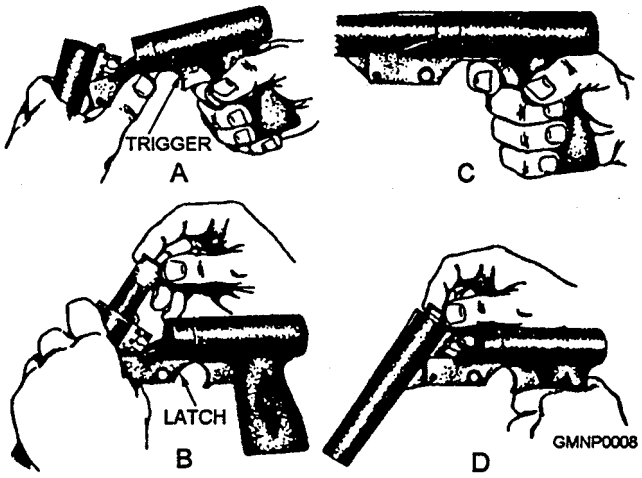

Figure 1-8.—Operation of the Mk 5 pyrotechnic pistol.

(view B). Push the barrel upward until it latches in the closed position. The pistol is now ready to fire.

2. To fire the pistol, aim it upward at the desired angle, normally 60 degrees, but clear of other ships or personnel. Pull the trigger, as shown in figure 1-8, view C. Keep your elbow slightly bent when firing to absorb the shock of recoil and to prevent the pistol from knocking itself out of your hand.

3. To extract the expended shell, break the pistol open again (view A), and pull the shell out of the chamber (view D).

WARNING

The pyrotechnic pistol is cocked at all times when the breech is closed, it has no positive safety mechanism. Illumination signals must NOT BE LOADED in the pistol until just before use. Untired signals must NOT be left in the pistol.

The Mk 5 pistol must be kept in serviceable condition at all times. Clean it thoroughly after each use according to the procedure prescribed on the appropriate 3-M System maintenance requirement card (MRC).

When loading or firing a pyrotechnic pistol, NEVER point it in the direction of other personnel or vessels.

NEVER use the Mk 5 pistol with ammunition other than that authorized for use with it. Conversely, illumination signals should never be fired from shotguns or from projectors other than those authorized.

AN-M37A2 Through AN-M39A2 Series, Double-Star Aircraft Illumination Signal

The AN-M37A2 through AN-M39A2 series illumination signals (fig. 1-9) are fired from the AN-M8 pyrotechnic pistol for either day or night identification or signaling. Each signal projects two stars of the same color, which burn from 7 to 13 seconds, to an altitude of approximately 250 feet above the point of launch. The 25,000-candlepower stars are visible from 2 to 3 miles in daylight and 5 miles at night in clear weather. The display colors are indicated by l/4-inch bands around the circumference of the signal and by colors on the closing wad. No provision is made for identification by touch as with the Mk 2 marine illumination signal. These signals ignite upon firing since they have no delay fuze.

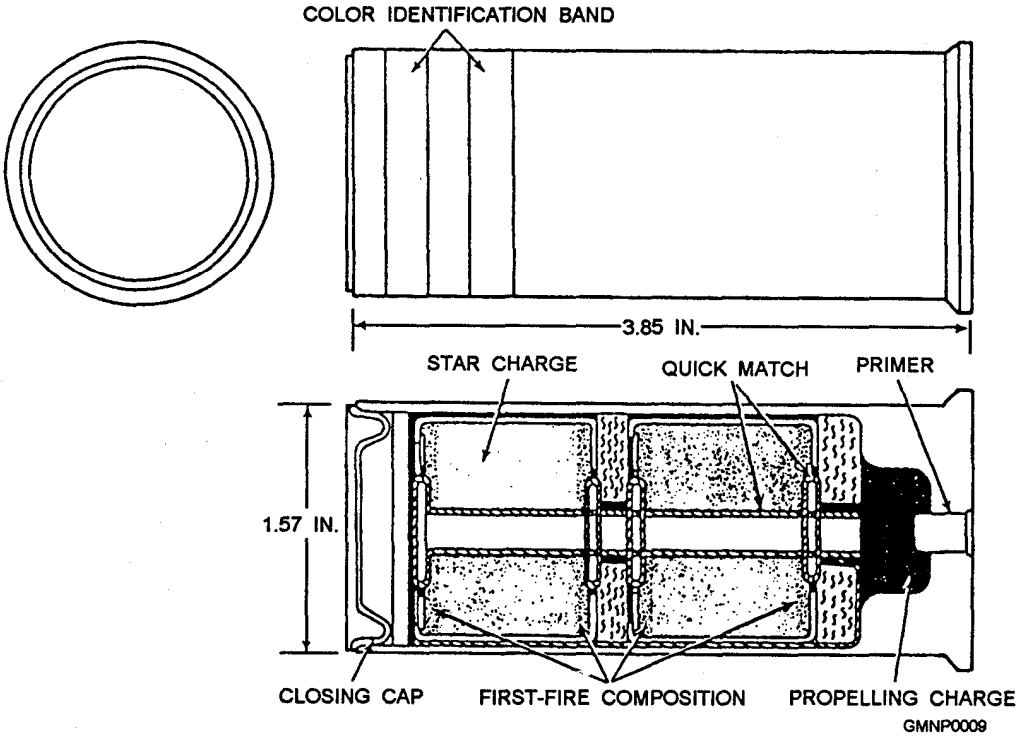

Figure 1-9.—The AN-M37A2 through the AN-M39A2 aircraft illumination signals.

Mk 1 Marine Illumination Signal

The Mk 1 marine illumination signal (fig. 1-10) is a general-purpose signal fired from the AN-M8 pyrotechnic pistol. The Mk 1 signal is available in two versions: the Mod O and the Mod 1.' The Mod O produces a red, green or yellow 7- to n-second star that falls free and leaves a trail of white light, similar to a comet. The Mod 1 produces a 20- to 30-second parachute-suspended red star. Both rounds are expelled from the pyrotechnic pistol by an auxiliary explosive to an approximate altitude of 30 feet. A rocket motor then ignites to propel the signal to a minimum height of 500 feet. It is stabilized in flight by folded fins that spring out once the signal is fired. At the end of its burn, the rocket propellant ignites an expelling charge and the pyrotechnic composition.

Mk 2 Marine Smoke Signal

The Mk 2 marine smoke signal (fig. 1-11) is intended primarily for signaling between ships and aircraft. It consists of a parachute-suspended red smoke display that persists for 20 to 30 seconds at a minimum height of 500 feet. The Mk 2 smoke signal is fired from the AN-M8 pyrotechnic pistol and functions much the same as the Mk 1 marine illunination signal.

AN-MS Pyrotechnic Pistol

A pistol similar to the Mk 5 pyrotechnic pistol is the AN-M8 pyrotechnic pistol (fig. 1-12). It can be used with a number of signals of shotgun-shell shape. The AN-M8 pyrotechnic pistol is loaded and fired in much the same fashion as the Mk 5. To open the breech for loading, raise the breechblock and pivot the hinged barrel down for loading and unloading. The same safety and maintenance procedures also apply.

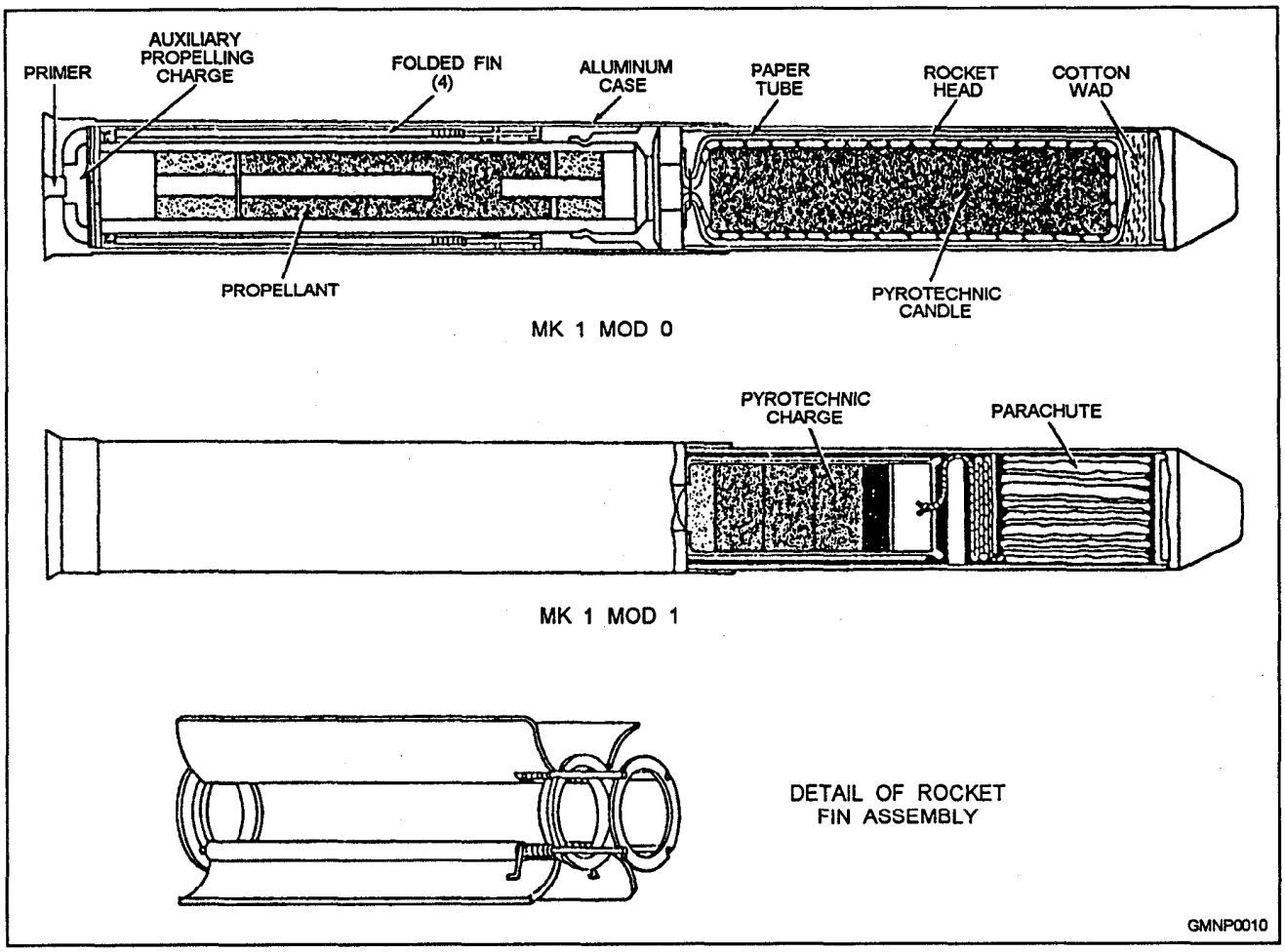

Figure 1-l0.—The Mk 1 marine illumination signal.

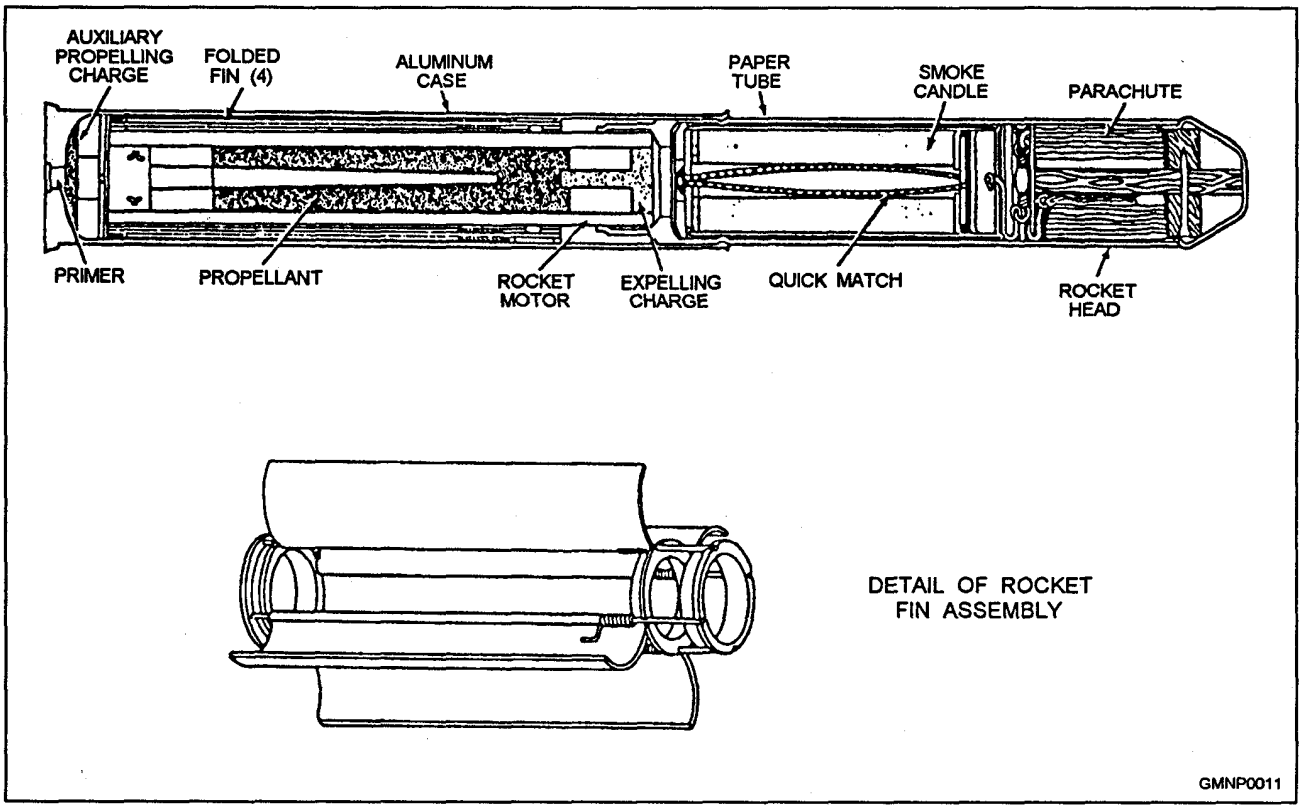

Figure 1-11.—The Mk 2 marine smoke signal.

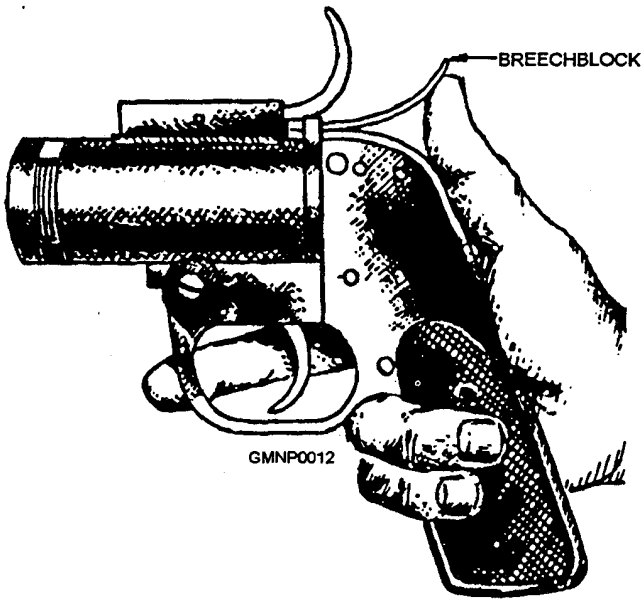

Figure l-12.—The AN-M8 pyrotechnic pistol.

WARNING

The pyrotechnic pistol is cocked at all times when the breech is closed, it has no positive safety mechanism. Illumination signals must NOT BE LOADED in the pistol until just before use. Unfired signals must NOT be left in the pistol.

DISTRESS AND HAND SIGNALS

There are three common types of hand-held personnel distress pyrotechnic devices currently found aboard surface ships; the Mk 13 smoke and illumination signal, the Mk 1 Navy light, and the Mk 79 personnel distress signal kit.

Mk 13 Marine Smoke and Illumination Signal

The Mk 13 marine smoke and illumination signal provides a pillar of smoke by day and a fiery light at fight. It is a very comforting thing to have in a life raft or a life vest.

The Mk 13 signal (fig. 1-13) is a metal cylinder about 5 1/8 inches long and 15/8 inches in diameter. It weighs between 6 and 7 ounces. One end contains a canister that, when ignited, produces orange smoke for about 20 seconds. The other end contains a pyrotechnic flame pellet that will burn for approximately 20 seconds.

Each end of the metal tube is enclosed by a plastic cap. Under each cap is a pull ring. When you pull the ring, a friction wire attached to its inside surface moves through a cap coated with a composition that ignites (by friction), setting off either the flare or the smoke canister (depending on which ring you pull).

The signal body carries illustrated instructions for use. The flame end plastic cap has three prominent protrusions (beads) across its face to identify it as the end to use at night. When you use the signal, point it away from the face and hold it at arm's length at a 45-degree angle after it ignites. After one end of the signal has been used, douse the signal to cool the metal parts. Keep it so that, if necessary, the other end can be used. Each end is separately insulated and waterproofed. NEVER try to use both ends at once. When using the smoke signal, keep it to leeward.

These signals are packaged 12 per aluminum container (Mk 3), 9 such containers (108 signals) per wooden box. They may also be packaged 18 signals per aluminum container (M2A1).

Mk 1 Navy Lights

Navy lights are hand torches that burn with a brilliant light visible up to 3 miles at night. They come in two colors: blue and red. Navy blue lights

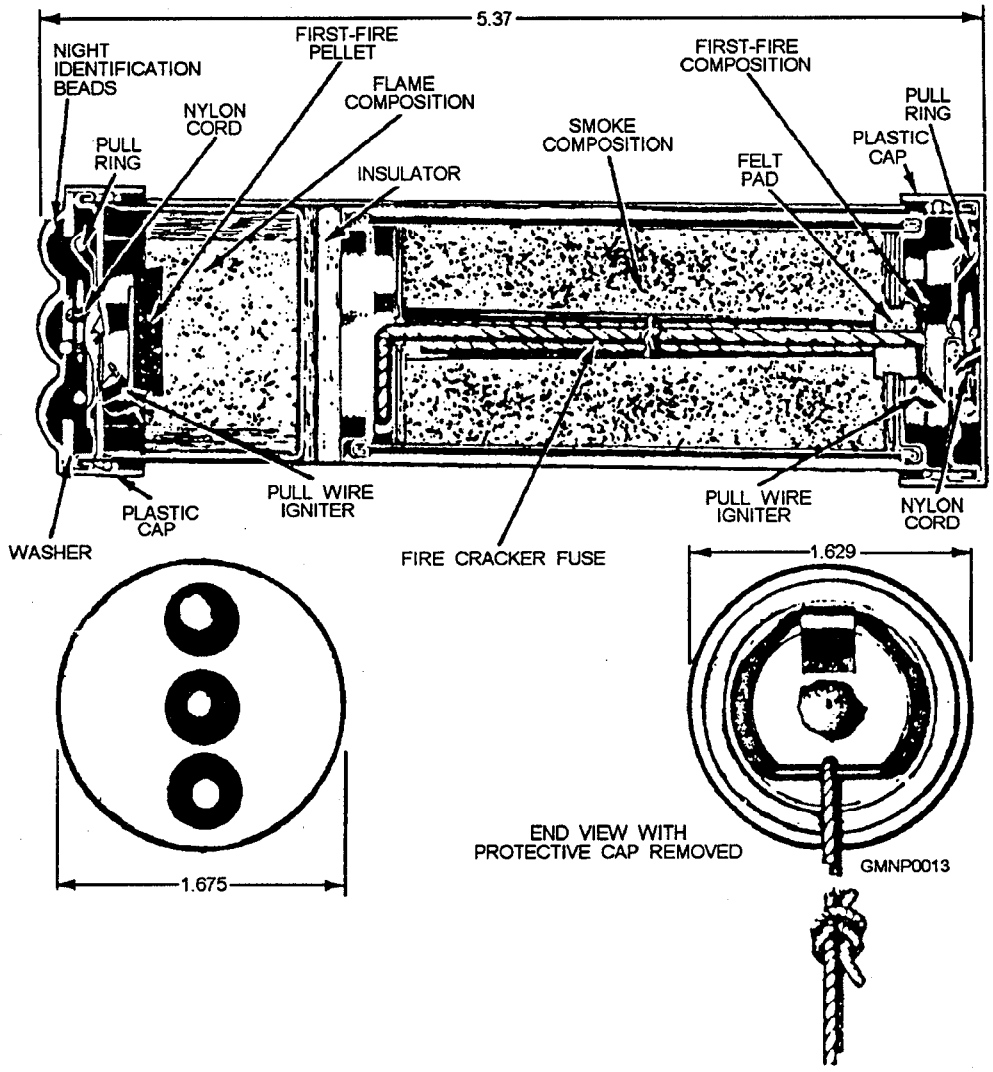

Figure l-13.—The Mk 13 marine smoke and illumination signal.

(Mk 1 Mod 1) burn for 75 seconds; Navy red lights (Mk 1 Mod O) burn for 135 seconds. The two lights are similar in appearance and construction (fig. 1-14).

Navy lights consist of a paper tube that contains the pyrotechnic substance with a wooden handle at one end and, at the other end, a cover with an exterior coating of abrasive, like that on the scratching side of a safety matchbox. A tear strip protects the exterior of the cover. The upper end of the paper tube, beneath the cover, is capped by a fabric impregnated with igniting compound similar to that on the head of a safety match.

To ignite the Navy light, tear off the protective strip, remove the cover, and scrape the inverted cover across the top of the paper tube. When you do this, it is advisable to hold the light pointing away from you at an angle of about 45 degrees to avoid contact with hot particles falling off the pyrotechnic candle. Hold the light at that angle while it burns.

Navy lights are shipped in metal containers with 6 to 12 lights packed in each. The metal containers are packed into cardboard cartons that hold 12 metal containers. Since these lights deteriorate when exposed to moisture, they should not be removed from their containers until ready for use. For the same reason, keep them away from water or moisture. Lights that have been left in open containers for more than 6 months should be turned into the nearest ammunition depot at the earliest opportunity. Lights that have become chemically encrusted or give off an acetic acid (vinegar) odor should be disposed of immediately. Put them in a weighted sack and dump them overboard

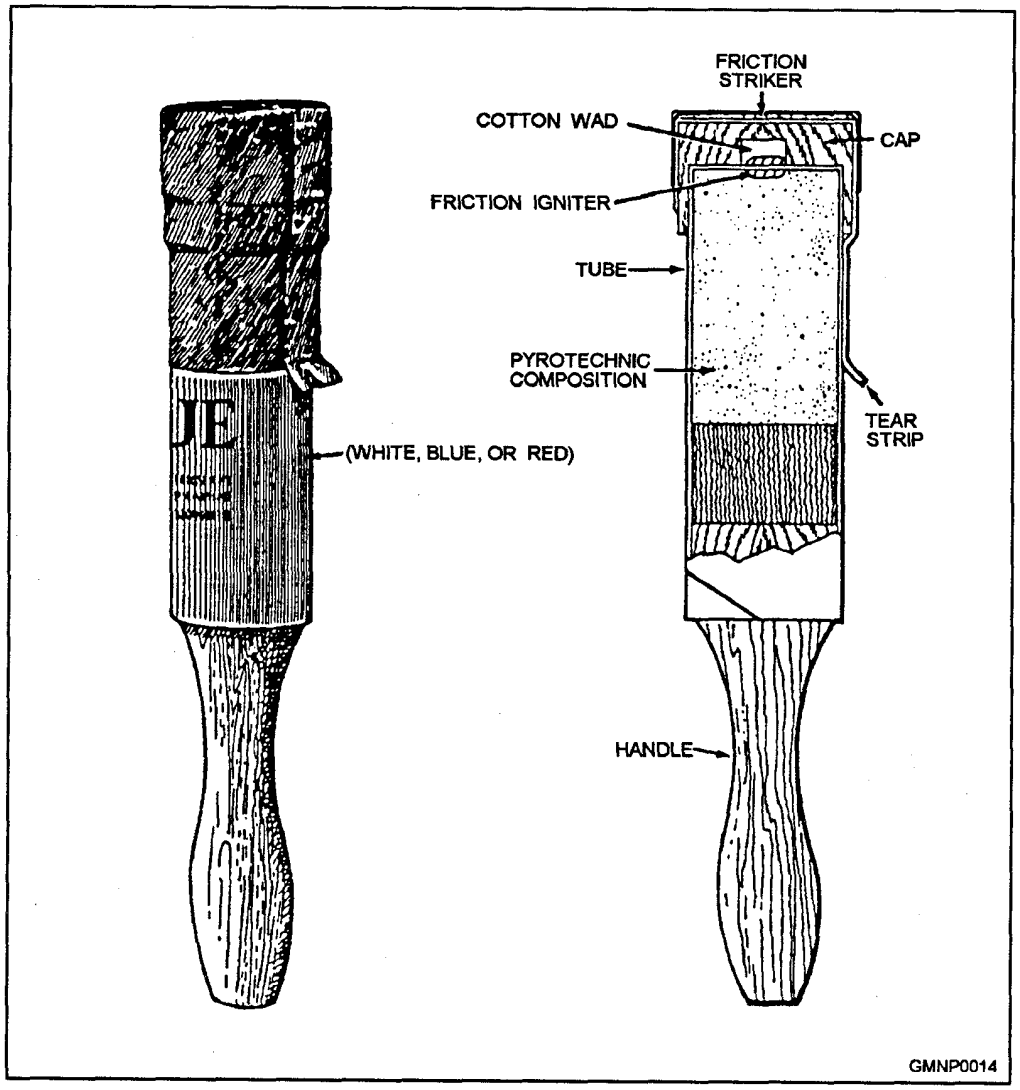

Figure l-14.—The Mk 1 Navy light.

Mk 79 Mod O and Mod 2 Personnel Distress Signal Kits

These kits (fig. 1-15) are designed to be used by downed aircrew personnel or personnel in life rafts as a distress signaling device. It is small and lightweight so that it can be carried in pockets of flight suits or on life rafts. The projector aims and fires the signals. Each signal contains a red pyrotechnic star. On activation, this star is propelled upward to a minimum height of 250 feet. The star burns for a minimum of 4 1/2 seconds.

The Mk 79 Mod O kit consists of one Mk 31 Mod O surface signal projector, a plastic bandoleer holding seven Mk 80 hand-fired signals, and an instruction sheet. The Mk 79 Mod 2 kit contains Mk 80 Mod 2 signals.

The projector consists of a steel cylinder slightly more than 5 inches long and approximately 1/2 inch in diameter. The base (or handle) is knurled to provide a more positive gripping surface. Fixed at the base end is an eyebolt to which is tied a 48-inch polypropylene cord, the other end of which is attached to a plastic bandoleer designed to hold seven signals. The firing end of the projector is interiorly threaded for the insertion of a signal. Near this end is a firing slot through which the trigger screw moves when it is released from the angle safety slot. The trigger screw is attached to the firing pin that is forced against the signal primer by a helical spring within the knurled portion of the cylindrical body.

Operating Instructions

The Mk 31 Mod O projector is operated as follows:

1. Remove the bandoleer and projector from the plastic envelope.

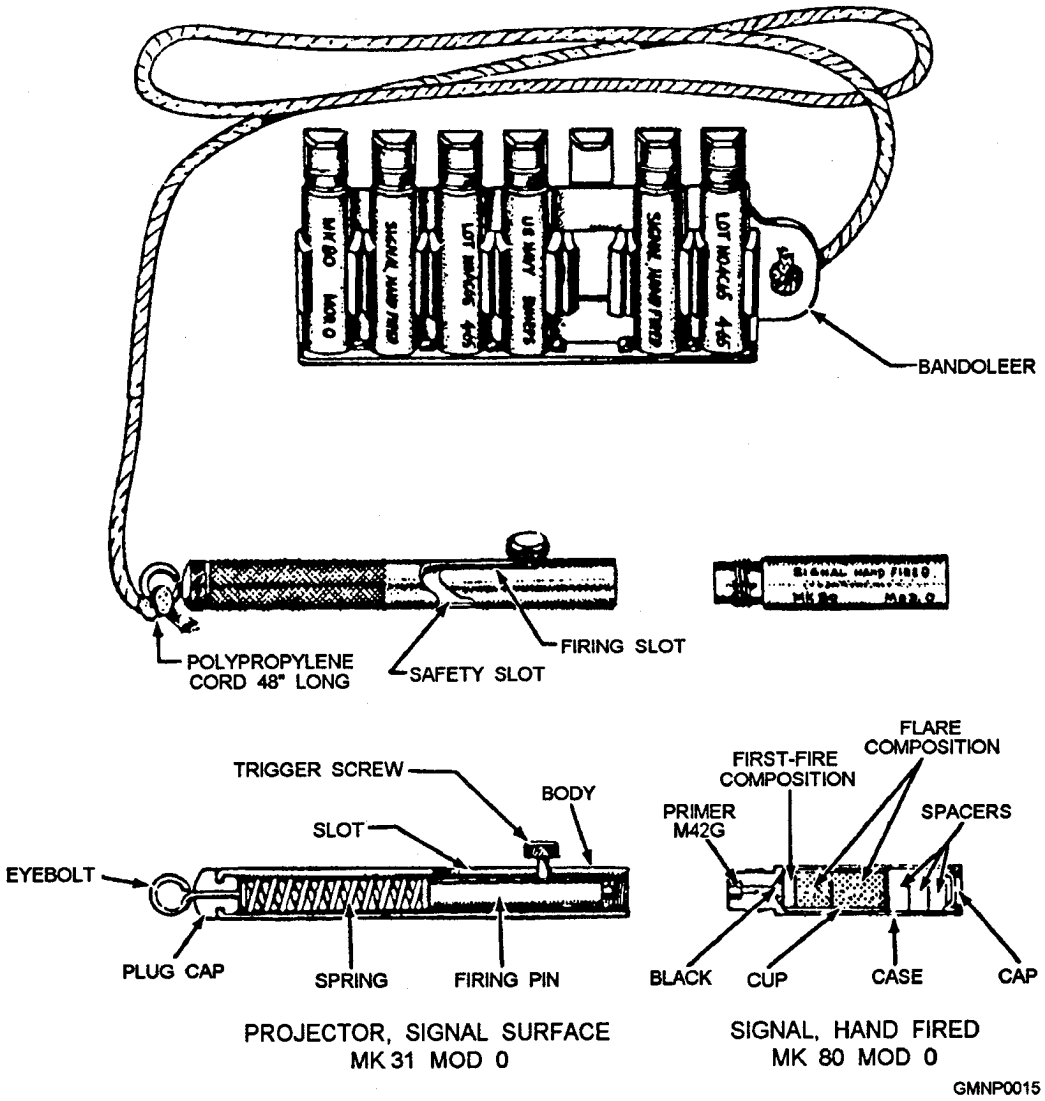

Figure 1-15.—The Mk 79 Mod 0 illumination signal kit.

2. Cock the firing pin of the projector by moving the trigger screw to the bottom of the vertical slot and slipping it to the right so that it catches at the top of the angular (safety) slot.

WARNING

The plastic tabs over the signals in the bandoleer protect the percussion primers from being struck accidentally. They should be kept intact until just before loading the signal into the projector.

3. Break the protective plastic tab away from the signal in the bandoleer to allow attachment to the projector.

4. Mate the projector with the signal and rotate the projector clockwise until the signal is seated.

5. Hold the projector over your head with your arm fully extended. The projector should be pointed at a slight angle away from the body.

6. While firmly gripping the projector, fire the signal by slipping the trigger screw to the left out of the safety slot and into the firing slot.

NOTE

This action should be one continuous movement so that the thumb does not interfere with the forward motion.

7. If the signal fails to fire, pull the trigger screw back to the bottom of the firing slot against the force of the spring, and lift your thumb quickly.

WARNING

When removing a misfired cartridge, ensure that you keep it pointed in a safe direction and do not place any part of your hand over the discharge end of the cartridge.

8. Unscrew the spent signal case or signal that has failed to fire and discard it by throwing it over the side.

9. Place the trigger screw in the safety slot and reload, as in step 4, if you need to fire another signal.

Safety Precautions

The following special safety precautions apply when using the Mk 79 kit:

1. Signals in this kit are ignited by percussion primers, which should be protected against being struck. Protruding tabs of the bandoleer, which extend over the signal bases, prevent accidental striking of the primers. They should not be torn off or bent back except in loading a signal into the projector.

2. The projector should not be loaded until immediately before firing. If a signal is loaded into the projector and is not fired immediately, it should be returned to the bandoleer.

WARNING

Dented or damaged signals should not be used. Dents or other imperfections might result in violent actions of the signal when fired.

3. Signals should be inspected periodically to ensure that they are not dented or otherwise damaged.

4. Signals should be kept away from fire and other heat sources.

5.The projector trigger screw should be checked frequently to ensure that it is tight. A loose trigger can release the firing pin prematurely and cause injury, or it might fall out and be lost during emergency loading, thereby rendering the projector useless.

6. The trigger screw should be in the safety slot while a signal is being loaded.

7. In the firing of the projector, care should be taken to raise the arm well above the head with the projector held in a vertical position. A loaded projector should never be pointed toward other personnel or toward the body of the user.

PYROTECHNIC SAFETY HANDLING AND STOWAGE

The following general information is taken directly from *Pyrotechnic, Screening, Marking, and Countermeasure Devices*, NAVSEA SW050-AB-MMA-010, chapter 1.

Pyrotechnic Safety

"All pyrotechnic and screening devices, while designed and tested to be safe under normal conditions,

can be subject to accidental ignition because of a wide variety of circumstances. The general rule to follow is: Be constantly aware that pyrotechnics contain chemical components that are intended to burn with intense heat, and act accordingly."

Pyrotechnic Handling and Stowage

All pyrotechnics and smoke-screening devices are designed to withstand normal handling. They should, however, be handled as little as possible to lessen the chances of damage, which might cause accidental ignition or leakage. Many devices contain materials of a dangerous nature and are therefore designed with safety features, which should be maintained in good operating condition. Dents, deformations, or cracks in the outer body may interfere with the proper functioning of these safety features or might cause ignition during handling or stowage. It is therefore imperative that extreme care be taken to prevent damage to containers of pyrotechnics and screening devices and to the devices themselves.

Effect of Moisture on Pyrotechnics

The proper functioning of pyrotechnic, dye-marking, and screening devices is frequently affected by moisture. Some compositions may become more sensitive and dangerous when exposed to moisture, while others tend to become difficult to ignite and less dependable in operation. Care should be exercised to prevent damage that would interfere with seals because some screening devices produce their smoke by reaction of their chemical contents with moisture in the air. Also, bear in mind that some marine location markers, such as the Mk 58, are saltwater-activated and should be stowed with that in mind. That fact should also be considered in emergency situations where the markers could be inadvertently exposed to fire-fighting water or runoff.

Effect of Temperature on Pyrotechnics

Pyrotechnics and some screening devices may become adversely affected by excessively high or variable temperatures. These devices should never be stored where direct rays of the sun could generate excessively high temperature. Stowage should be in dry, well-ventilated places that provide the greatest possible protection from such conditions. All Navy pyrotechnics have been designed to withstand temperatures from -65°F to 160°F and, therefore, will probably be safe from deterioration or damage within that range. However, it is recommended that every reasonable effort be made to maintain stowage temperature at not more than 100°F. Specific ammunition stowage temperature requirements for all types of ammunition are addressed in NAVSEA OP 4.

Toxic Hazards of Pyrotechnics

Many chemicals used in pyrotechnics, screening equipment, and dye-marking devices are poisonous if taken internally. This also applies to the residue of burned pyrotechnics. From the inhalation standpoint, the products of pyrotechnic devices and smoke generators oftlen present a serious problem. Many of the smokes and fumes given off by pyrotechnics and screening devices are considered nontoxic and only mildly irritating to the eyes and nasal passages when encountered in relatively light concentrations out-of-doors. Heavy concentrations in closely confined spaces, however, are dangerous and may be lethal because they reduce the amount of oxygen in the air. Anything more than a brief exposure to the gases of combustion, or to screening smokes, should be avoided or should be protected against through the use of an appropriate breathing apparatus.

ORDNANCE SAFETY

LEARNING OBJECTIVE. Identify the publications that you will most often refer to for the safety requirements of naval explosives and pyrotechnics.

Personnel not familiar with ammunition, or untrained in its use and handling, normally are afraid of the possibility of an explosion. However, when handled properly, Navy explosive ordnance is relatively safe. Ordnance safety regulations are contained innumerous publications. However, you will most often refer to the safety requirements contained in NAVSEA OP-4, *Ammunition Afloat;* OP-5, *Ammunition Ashore;* OP-3347, *United States Navy Ordnance Safety Precautions;* and the safety summaries contained in equipment maintenance manuals. *Pyrotechnic, Screening, Marking, and Countermeasure Devices,* NAVSEA SW050-AB-MMA-010, contains additional information and safety precautions that pertain to the pyrotechnic devices described in this chapter as well as other devices not mentioned. Many of these regulations and precautions embody the lessons learned as a result

of actual disasters. They must be obeyed without exception and cannot be changed or disregarded.

No matter how dangerous the work, familiarity can lead to carelessness. All personnel involved in the inspection or care of explosives, propellants, and pyrotechnics must exercise utmost care to ensure that regulations and instructions are rigidly observed. As a GM you should be thoroughly familiar with the information contained in the references cited in the last paragraph. You will be expected to enforce the provisions they contain as you carry out your duties and supervise assigned personnel.

Ordnance safety will be addressed throughout this manual as it applies to the topic under discussion.

SUMMARY

In this introductory chapter, we discussed the fundamental characteristics of explosives, how they are classified, and some of their specific uses in Navy explosive ordnance. We described how an explosive train is used to ignite or detonate a propellant charge or main explosive charge. We then identified some of the service explosives you will encounter as a Gunner's Mate. We then described some of the common pyrotechnic devices found aboard surface vessels, their operation, and some safety precautions. And we concluded this chapter with a brief discussion of ordnance safety responsibilities and identified the primary reference sources of Navy ordnance safety regulations. We highly recommend that you continue your education as a Gunner's Mate by reading these and other references listed in this manual.

CHAPTER 2

AMMUNITION, MAGAZINES, AND MISSILE HANDLING

In the preceding chapter, you learned about the raw materials that are used to make up explosives and pyrotechnics. In this chapter, you will study Navy gun ammunition and its basic construction features and functions. We will identify the types of projectiles and fuzes used in the Navy and describe the systems used to identify ammunition. We will also describe magazines and their sprinkler and alarm systems. We discuss some of the equipment, training requirements, and safety precautions pertaining to the handling and stowage of ammunition. Finally, we will discuss missile processing and associated handling equipment. To get the most benefit from this chapter, you should have a basic understanding of the Navy's Maintenance and Material Management (3-M) System. You may wish to review the 3-M Systems fundamentals before continuing.

AMMUNITION

LEARNING OBJECTIVE Describe the classification, components, and features of Navy gun ammunition.

In a general sense, ammunition includes anything that is intended to be thrown at or put in the path of the enemy to deter, injure, or kill personnel or to destroy or damage materials. In this section, we describe how ammunition is classified, the common components of gun ammunition, and some of the types of gun ammunition in use today.

AMMUNITION CLASSIFICATION

Gun ammunition is classified in several different ways, depending on your needs. It maybe classified by size of gun, assembly configuration, service use, or purpose and construction.

Classification by Size of Gun

Gun ammunition is most commonly classified by the size of the gun in which it is used. In addition to designations of bore diameter, such as 25-mm, 76-mm, or 5-inch, the length of the gun bore in calibers (inches) is also used as a means of classification. Thus a 5-inch, 54-caliber projectile is one used in a gun having a bore diameter of 5 inches and a bore length of 54 times 5 inches, or 270 inches.

Classification by Assembly

The three types of ammunition classified by assembly are shown in figure 2-1.

FIXED AMMUNITION.— The fixed class applies to ammunition that has the cartridge case crimped around the base of the projectile. The primer is assembled in the cartridge case. The projectile and the cartridge case, containing the primer and propellant charge, all form one unit as a fixed round of ammunition. Guns through 76-mm use fixed ammunition.

SEPARATED AMMUNITION.— This class applies to ammunition that consists of two units-the projectile assembly and the cartridge case assembly. The projectile assembly consists of the projectile body containing the load, nose fuze, base fuze, and auxiliary detonating fuze, as applicable. The cartridge case assembly consists of the cartridge case, primer, propellant charge, wad, distance piece, and a plug to close the open end of the cartridge case. The projectile and cartridge are rammed into the gun chamber together as one piece though they are not physically joined. Separate ammunition has been produced in gun sizes of 5-inch, 38-caliber through 8-inch, 55-caliber guns.

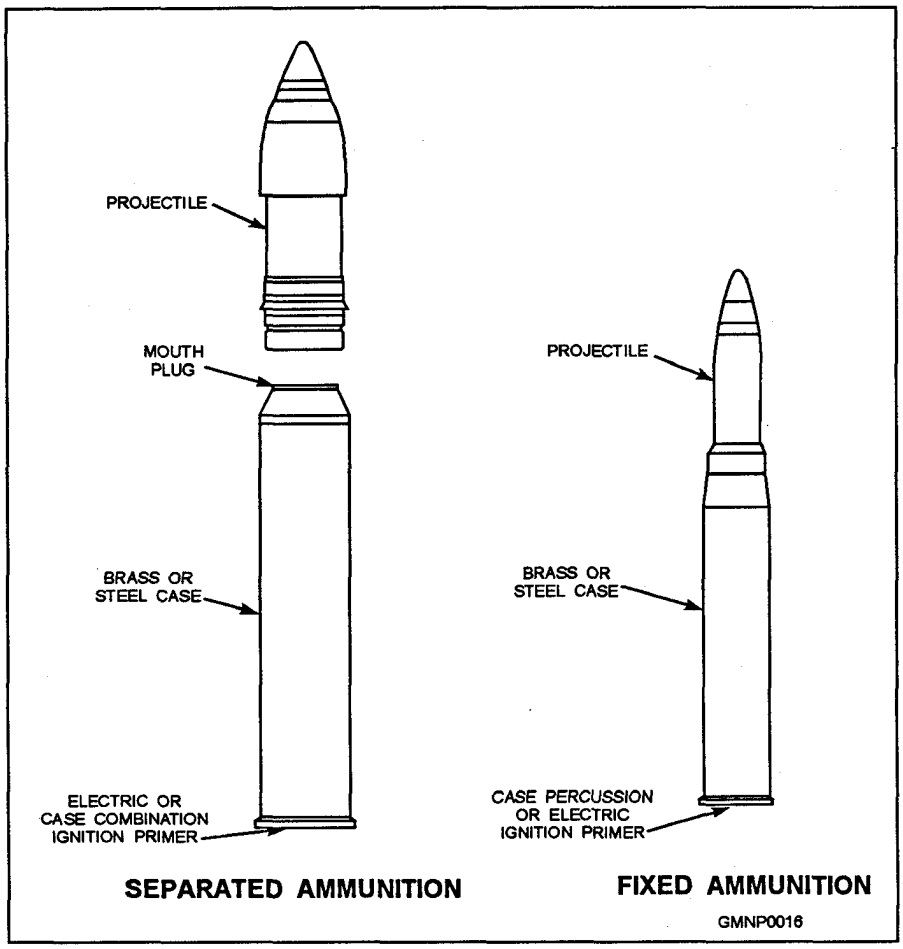

Figure 2-1.—Typical Navy gun ammunition assemblies.

SEPARATE-LOADING (BAGGED GUN) AMMUNITION.— This class applies to gun sizes 8 inches and larger. Separate-loading ammunition does not contain a cartridge case. The propellant charge is loaded in silk bags that are consumed during the combustion of the propellant when fired from the gun. The projectile, propellant charge, and primer are loaded separately. There are currently no naval guns in use that use separate-loading ammunition.

Classification by Service Use

For economy and safety, gun ammunition is assembled and classified by service use, as follows:

- Service: Ammunition for use in combat. These projectiles carry explosive, illuminating, or chemical payloads.

- Target and Training: Ammunition for training exercises. The projectiles are comparable in weight and shape to those of service ammunition but are of less expensive construction and normally contain no explosive. Variable time, nonfragmenting (VT NONFRAG) projectiles are an exception in that they are for training purposes and have a combination black powder-pyrotechnic color-burst element.

- Dummy or Drill: Any type of ammunition assembled without explosives, or with inert material substituted for the explosives, to imitate service ammunition. The ammunition may be made of metal or wood. Dummy or drill ammunition is used in training exercises or in testing equipment. It is normally identified as dummy cartridges, dummy charges, or drill projectiles. Drill projectiles will not be fired from any gun.

Classification by Purpose and Construction

Service projectiles are classified by their tactical purpose as one of the following types: penetrating, fragmenting, and special purpose. Since targets differ in design and purpose, projectiles must also differ in their construction to make them more effective. If you

were to cut open, for purposes of inspection, the different types of projectiles listed previously (other than small arms), you would find their construction and characteristics are common. For example, penetrating projectiles have thick walls and a relatively small cavity for explosives, while fragmenting projectiles are thin-walled and have a relatively large cavity for explosives. Because of this difference, projectiles may also classified by their construction.

GUN AMMUNITION

Gun ammunition consists of a projectile and a propelling charge. In this section we will &scribe a typical projectile and the different types of projectiles, propelling charges, and fuzes currently in use.

Projectiles

The projectile is the component of ammunition that, when fired from a gun, carries out the tactical purpose of the weapon. While some types of projectiles are one piece, the majority of naval gun projectiles are assemblies of several components. AU the projectiles discussed (by classification) in this chapter have several common features, as described in the following paragraphs and as illustrated in figure 2-2.

OGIVE.— The ogive is the curved forward portion of a projectile. The curve is determined by a complex formula designed to give maximum range and accuracy. The shape of the ogive is generally expressed by stating its radius in terms of calibers. It maybe a combination of several arcs of different radii.

BOURRELET.— The bourrelet is a smooth, machined area that acts as a bearing to stabilize the projectile during its travel through the gun bore. Some projectiles have only one bourrelet (forward); the rotating band serves as the bearing surface in the rear. Still other projectiles have one bourrelet forward and one or two aft, the after one being located adjacent to and either forward and/or aft of the rotating band. Bourrelets are painted to prevent rusting.

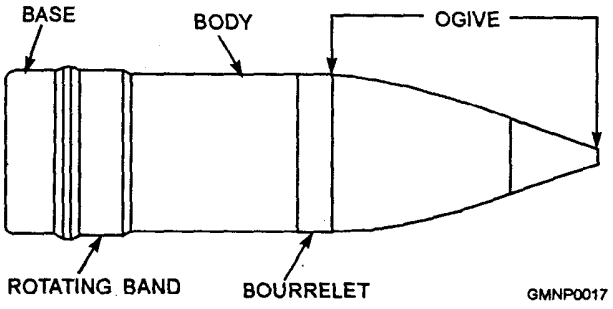

Figure 2-2.—external features of a typical gun projectile.

BODY.— The body is the main part of the projectile and contains the greatest mass of metal. It is made slightly smaller in diameter than the bourrelet and is given only a machine finish.

ROTATING BAND.— The rotating band is circular and made of commercially pure copper, copper alloy, or plastic seated in a scored cut in the after portion of the projectile body. In all minor and medium caliber projectiles, rotating bands are made of commercially pure copper or gilding metal that is 90 percent copper and 10 percent zinc. Major caliber projectile bands are of cupro-nickel alloy containing 2.5 percent nickel or nylon with a Micarta insert. As a projectile with a metallic band passes through the bore of the gun, a certain amount of copper will be wiped back on the rotating band and will form a skirt of copper on the after end of the band as the projectile leaves the muzzle of the gun. This process is known as fringing and is prevented by cutting grooves, called cannelures, in the band or by undercutting the lip on the after end of the band. These cuts provide space for the copper to accumulate. The primary functions of a rotating band are:

1. To seal the forward end of the gun chamber against the escape of the propellant gas around the projectile,

2. To engage the rifling in the gun bore and impart rotation to the projectile, and

3. To act as a rear bourrelet on those projectiles that do not have a rear bourrelet.

BASE.— The base is the after end of the projectile. A removable base plug is provided in projectiles that are loaded through this end. A fuze hole maybe drilled and tapped in the center of this base plug. Projectiles with large openings in the nose for loading through that end require no base plug. In such cases, however, the solid base of the projectile may be drilled in the center to receive abase fuze or tracer if desired The edge formed by the sidewalls and the base is usually broken slightly to give additional range. Some projectiles are tapered aft of the rotating band, a shape known as boat tailed. Projectiles with plastic bands may have full caliber boat tails for optimum aerodynamic shape.

Types of Projectiles

Projectiles are also classified by their tactical purpose. The following are descriptions of the common projectile types (fig. 2-3).

ANTIAIRCRAFT (AA).— AA projectiles are designed for use against aircraft they have no base fuze. Otherwise, they are substantially the same as the high-capacity (HC) projectiles described later.

ANTIAIRCRAFT COMMON (AAC).— AAC projectiles are dual-purpose projectiles combining most of the qualities of the AA type with the strength necessary to penetrate mild steel plate (fig. 2-3, view A). However, AAC projectiles do not have the penetrative ability of common (COM) projectiles. The type of fuzing will depend on the use. Fuze threads are provided in the nose and in the base. AAC projectiles are normally equipped with a mechanical time fuze (MTF) and an auxiliary detonating fuze (ADF). Dual-purpose action is accomplished by a time setting for airburst or by setting MTFs on "safe" or for a time longer than flight to target to permit the base detonating fuze (BDF)(delay) to function for penetration. When you substitute a point detonating fuze (PDF) for the MTF, these projectiles are converted to HC for surface burst.

ARMOR-PIERCING (AP).— AP projectiles are designed to penetrate their caliber of class A arrnor plate. A 5-inch projectile will penetrate 5 inches of armor, and so on. They are characterized in most cases by a low expIosive-charge-to-total-weight ratio and by their windshields and AP caps. Windshields are light nosepieces of false ogives designed to give suitable flight characteristics-they are made of mild steel, steel stamping, or aluminum. Windshields are screwed to the AP cap and are staked in place. AP caps are made of the same kind of steel as the projectile bodies. The cap breaks down the initial strength of the armor plate and provides support to the pointed nose of the projectile as it begins to penetrate the target. The cap also increases the effective angle of obliquity at which the projectile may hit and penetrate. The cap is peened and soldered to the nose. AP projectiles are fuzed only in the base. The fuzes must not be removed except at ammunition depots. Powdered dye colors are loaded in the windshield of most AP projectiles. These dye colors allow a firing ship to identify its splashes, since each ship is assigned a specific color. The dye is placed inside the windshield in a paper container. There are ports in the forward portion of the windshield that admit water when the projectile strikes the surface and breaks the port seals. Other ports in the after portion of the windshield are pushed out by pressure of the water inside the windshield. The dye is dispersed through these after ports.

COMMON (COM).— COM projectiles are designed to penetrate approximately one third of their caliber of armor. A 5-inch projectile would penetrate 1.66 inches of armor, and so on. They differ from AP projectiles in that they have no hardened cap and have a larger explosive cavity.

CHEMICAL.— Chemical projectiles may be loaded with a toxic, harassing, or smoke-producing agent. Of the smoke agents, white phosphorous (WP) is the most frequently used. WP projectiles (fig. 2-3, view B) are designed to produce heavy smoke and, secondarily, an incendiary effect. The small WP containers are expelled and then scattered by a delayed action burster charge that is ignited by a black powder expelling charge. Other chemical loads are dispersed in a similar manner.

PUFF.— Puff projectiles (fig. 2-3, view C) are nonexplosive projectiles used as practice (spotting) rounds. They are designed to produce dense smoke clouds approximating those of high-explosive rounds.

DRILL.— Drill projectiles are used by gun crews for loading drills and for testing ammunition hoists and other ammunition-handling equipment. They are made of economical but suitable metals and are designed to simulate the loaded service projectile represented as to size, form, and weight. They may be solid or hollow. If hollow, they may be filled with an inert material to bring them to the desired weight. This latter type is closed with abase or nose plug or both, as appropriate.

DUMMY.— Dummy projectiles are reproductions of projectiles that may be produced from a variety of materials for a number of purposes. Drill projectiles are dummy projectiles in that they are not to be fired from a gun. However, all dummy projectiles are not drill projectiles. Dummy projectiles may be made for display, instruction, or special tests.

HIGH CAPACITY (HC).— HC projectiles are designed for use against unarmored surface targets, shore installations, or personnel. They have a medium wall thickness and large explosive cavities. Large HC projectiles (fig. 2-3, view D) are provided with an auxiliary booster to supplement the booster charge in the nose of the main charge. With threads in both the nose and base, HC projectiles may receive a variety of fuzes or plugs to accomplish different tactical purposes. An adapter ring (or rings) is provided on the nose end of

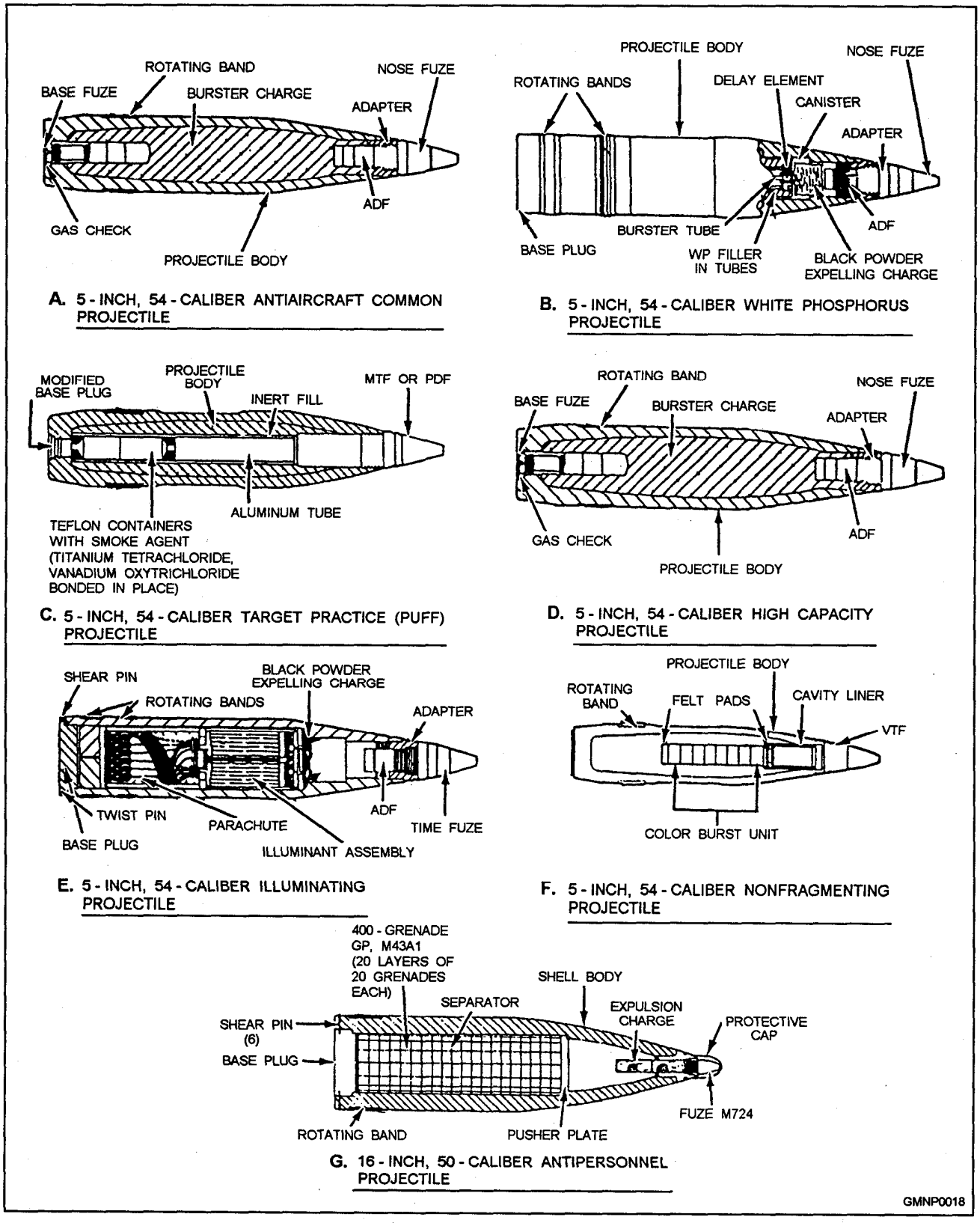

Figure 2-3.—Common projectile types.

most HC projectiles to allow installation of PDFs or nose plug and ADFs with different size threads. An adapter is removed for larger fuzes. HC projectiles are normally shipped with a PDF installed in the nose. The base fuze that is shipped installed in the projectile may not be removed except at an ammunition depot.

HIGH EXPLOSIVE (HE).— Small caliber projectiles with an HE designation are designed to receive a large explosive charge. structurally, they resemble the HC type in larger caliber projectiles. They have no base fuze; a nose fuze is issued installed in the projectile.

HIGH EXPLOSIVE-POINT DETONATING (HE-PD).— These projectiles feature PDFs that may require the use of an ADF and fuze cavity liner (FCL). If the PDF is of the new, short-intrusion type, no ADF is required since its function has been incorporated. Also, the FCL has been integrated with a fuze thread adapter in some cases.

HIGH EXPLOSIVE-VARIABLE TIME (HE-VT) .— These projectiles may be fuzed with either the short-intrusion variable time fuze (VTF) and adapter or with the deep-intrusion fuze and FCL.

HIGH EXPLOSIVE-MECHANICAL TIME/ POINT DETONATING (HE-MT/PD).— This projectile is similar to the HE-MT projectile except that the nose time fuze has a point detonating backup. This backlamp causes a self-destructive action on surface impact in case of airburst function failure due to clock failure or surface impact before expiration of the set time.

ILLUMINATING (ILLUM).— ILLUM projectiles (fig. 2-3, view E) are made with thin walls. Each contains a time fuze, an ADF, a small black powder expelling charge behind the ADF, an assembly consisting of a pyrotechnic star or candle with a parachute, and a Iightly held base plug. The time fuze serves to ignite the expelling charge. Explosion of the expelling charge forces out the base and the illuminating assembly and ignites the star or candle.

ROCKET-ASSISTED PROJECTILE (RAP).— To increase the range and effectiveness of 5-inch gun systems, the RAP was developed as an addition to existing gun ammunition. It has a solid-propellant rocket motor that can impart additional velocity and provide extended range compared to standard projectiles.

SELF-DESTRUCT, NONSELF-DESTRUCT (SD, NSD).— Certain older projectiles used in AA firing have a feature that detonates the explosive filler at a designated range to prevent the round from hitting other ships in the task force. Some VTFs contain this self-destruct device. Also, some tracers in small caliber projectiles are made *to* burn through to the explosive filler. In either case, the projectile carries the designation SD. Projectiles without one of these features are designated NSD.

TARGET (TAR).— These are blind-loaded (BL) projectiles. They are special projectiles designed for target practice, ranging, and proving ground tests. As target practice ammunition, they are used to train gunnery personnel. They may be fitted with a tracer (BL-T) or plugged (BL-P).

VARIABLE TIME-NONFRAGMENTING (VT-NONFRAG).— Some VT-NONFRAG projectiles (fig. 2-3, view F) are loaded to avoid rupturing the body and spreading fragments when the fuze functions. However, sometimes the projectile ogive breaks up into low-velocity fragments. They are designed for use in AA target practice, particularly against expensive drone targets, for observing the results of firing without frequent loss of the drones. These projectiles have fillers of epsom salts or other inert material to give the projectile the desired weight. A color-burst unit, consisting of pellets of black powder and a pyrotechnic mixture, is placed in a cavity drilled into the center of the inert filler. The color-burst unit is ignited through the action of the nose fuze and the black-powder pellets. The color-burst unit may be one of several colors that exits through the fuze cavity and ruptured projectile.

ANTIPERSONNEL.— The antipersonnel projectile (fig. 2-3, view G) consists of a projectile body, an expulsion charge, a pusher plate, a payload of 400 individually fuzed grenades, and a base plug. The M43A1 grenade is an airburst rebounding-type munition. The antipersonnel projectile is unique to the 16Æ/50 gun.

Propelling Charges

Propelling charges are mixtures of explosives designed to propel projectiles from the gun to the target. In fixed ammunition, the propelling charge and projectile are assembled together in a case and handled as one unit. The principal component parts are the brass or steel cartridge case, the primer, and the propellant powder charge. In the separated ammunition, the propelling charge and projectile are assembled separately-they are stowed and handled as separate units until they are loaded into the gun. The propelling charge of the separated ammunition round consists of the propellant primer, details, and closure plug assembled into the metal case. The propelling charges of separate loading ammunition are made up in sections separate from the projectile and primer. Propelling

charges for all calibers of ammunition have some common features. The basic type of charge is case ammunition. Saluting, reduced, and clearing charges have components that are the same as case ammunition, so they are included with case ammunition.

Propelling charges for small and medium caliber guns are assembled with primer and powder enclosed in a brass or steel container called a cartridge case. Assembly of the entire charge in a single, rigid, protective case increases the ease and rapidity of loading and reduces the danger of flarebacks. Also, the case prevents the escape of gases toward the breech of the gun; it expands from the heat and pressure of the burning powder and forms a tight seal against the chamber.

In case-type propelling charges, the propelling charge and primer are contained in a cylindrical metal cartridge case. This ammunition is of two types-fixed and separated. In fixed ammunition the primer, propelling charge, and projectile are assembled into a single unit that may be loaded into the gun in a single operation, In separated ammunition, the primer and propelling charge are contained in a cartridge case as a separate plugged unit; the projectile is also a complete, separate unit.

A complete round of separated ammunition consists of two pieces-a projectile and a cylindrical metal cartridge case sealed by a cork or plastic plug.

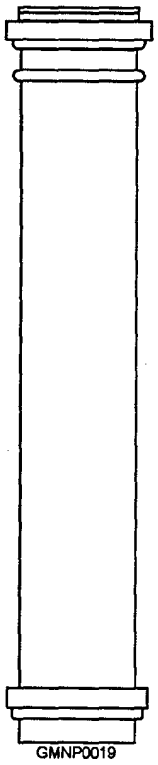

Figure 2-4.—Tank-type 5Æ/54 cartridge case container.

Separated ammunition is used in 5-inch guns and their cases are kept in airtight tanks (fig. 2-4) until they are to be fired

A complete round of fixed ammunition is one piece, with the cartridge case crimped to the base of the projectile. Fixed 76-mm rounds are also kept in tanks, but smaller calibers and small arms are stowed in airtight boxes, several rounds to a box.

The insides of both the fixed and separated ammunition cartridge cases are quite similar. Figures 2-5

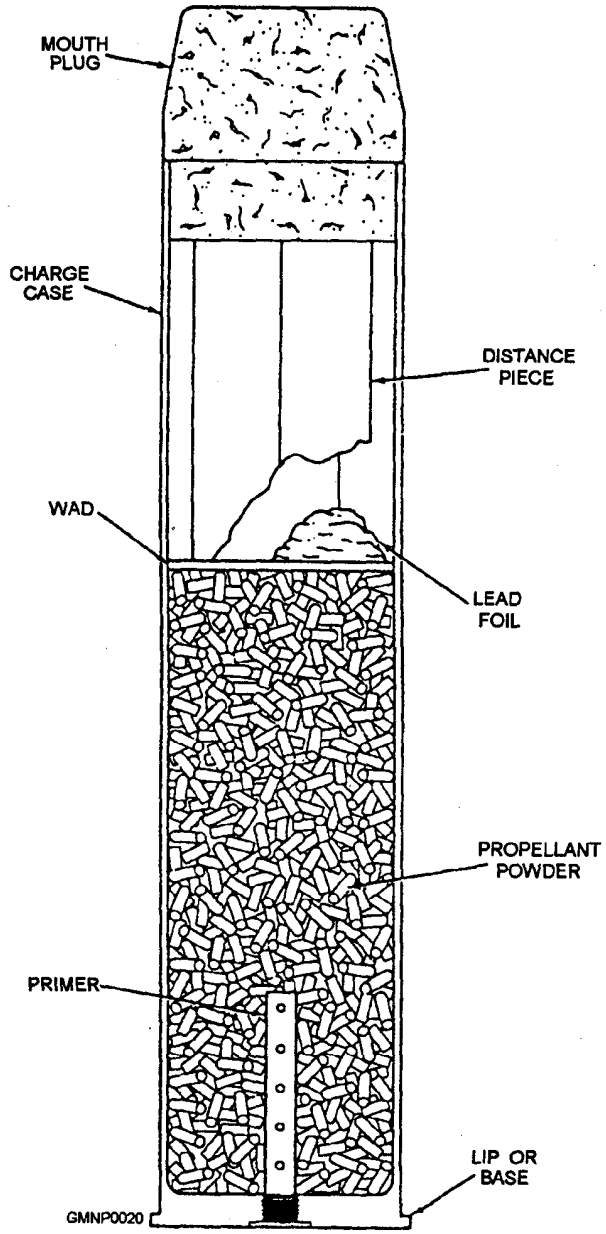

Figure 2-5.—Typical cartridge case for separated ammunition, sectional view.

and 2-6 show the main components of both types of cartridge cases. The base of the primer fits into the base of the case so that the firing pin of the gun lines up with and contacts the primer when the breech is closed. A black-powder ignition charge runs the full length of the perforated stock or tube of the primer.

The 5-inch ammunition being issued to the fleet is assembled with case electric primers. The most notable exception to this practice is the 76-mm round that uses a percussion-only primer.

Look at the cartridge case in figure 2-5 again. When the gun fires, the case expands under the powerful pressure of the burning propellant gas, then must contract so that it can be removed from the chamber. It must not stick to the chamber walls nor may it crack. For a long time, only seasoned brass cases could be relied on to perform correctly. During World War II, when the supply of brass became critical, metallurgists developed a steel case that has since almost completely replaced brass. Regardless of what cases are made of, used cases are often called "fired brass." Steel cartridge cases are no longer reloaded and reused; however, since the cartridge tanks are required for reuse, the cases maybe returned in the empty tank for the scrap value.

Immediately after firing and before returning the cases to their tanks, the ejected cases (76mm and larger) should be stood on their bases to permit residual gases (small amounts left over after firing) to escape completely. Other cases should be replaced in the original containers, tagged, and stowed.

In the center of the base of the case is the threaded hole for the primer. The case tapers slightly toward the forward end so that it can be withdrawn from the chamber without binding. A rim at the base is engaged by the extractors of the gun. In fixed ammunition, the case often has a bottleneck in which the projectile is crimped.

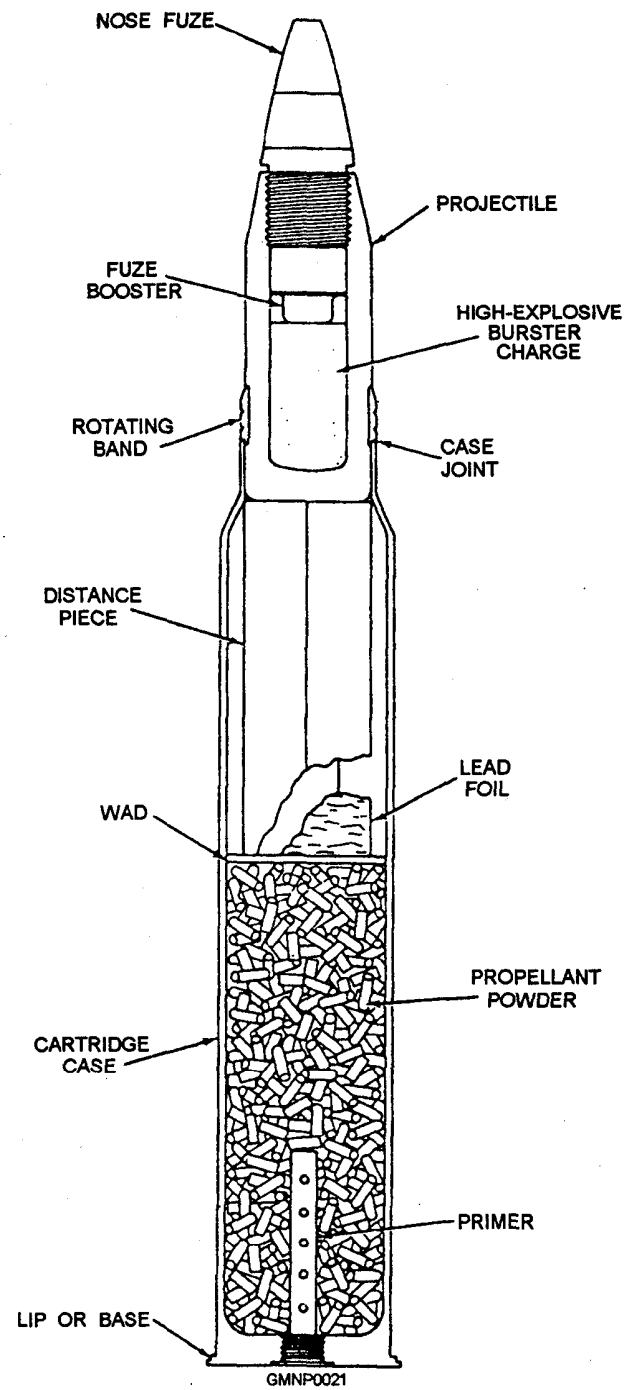

Figure 2-6.—Typical round of fixed ammunition, cartridge case assembled with projectile, sectional view.

The propellant powder in the case is the seven-perforation kind we have already discussed. (Small caliber grains have one perforation.) The powder is weighed out with great precision and loaded into the case at the ammunition manufacturing facility. Since it does not take up all the space inside the case and since it would be dangerous for the powder to have a lot of room to rattle around in, it is tightly packed and sealed under a cardboard or pyralin wad The wadis kept tight by a triangular cardboard distance piece. The distance piece bears up against the plug that closes the mouth of the case. Infixed ammunition, the case is sealed by the projectile base.

A small amount of lead foil included in each propelling charge functions to clear the bore of the metal fouling that scrapes off the projectile rotating band onto the rifling as the projectile passes through the barrel.

Reduced Charge.— A reduced charge is one that contains less than the service load of powder. Reduced charges are often used to fire on reverse-slope targets and may be used in target practice to decrease wear on the gun.

Clearing Charge.— When a round fails to seatfully upon being rammed into the gun chamber (preventing closure of the breech) or when the propelling charge fails to function, the projectile maybe fired by extracting the full-sized case and loading a clearing charge that is shorter.

Saluting Charge.— These are charges used when firing a gun to render honors. Since no projectile is involved in such firing, the charge consists of a cartridge case containing a black-powder load and a primer. Ships normally employ 40-mm for saluting. Saluting charges for these guns are issued completely assembled, with no replacement components.

FUZES

LEARNING OBJECTIVE Describe the different types and functions of fuzes used on current 5-inch and 76-mm projectiles.

In chapter 1 you learned that the burster charge of a projectile is relatively insensitive and requires an explosive train. This train begins with a very small amount of sensitive initiating explosive that initiates the chain reaction required to detonate the less sensitive main burster charge.

The component that sets off the projectile bursting charge is the fize. No matter how complicated or simple the construction or function of the fuze is, it always serves the same purpose.

INERTIA

The nature of the fuze mechanism depends, of course, on what type of fuze it is. All fuze mechanisms depend on certain forces either to start their functioning or to keep them functioning. These forces develop when the projectile is fired, when it flies through the air, or at the end of the flight. In the sequence of their development, these forces are called setback, angular acceleration, centrifugal force, creep, and impact. They are worth explaining.

All objects have a property known as inertia. For our purpose we can say that inertia means resistance to change in motion. A moving ship, for example, tends to keep going after the engines have been stopped. It would keep going indefinitely if it were not for the fluid friction of the water and obstacles in its way. By the same reasoning, a ship dead in the water tends to remain so; it takes a mighty effort by its propulsion machinery to get it under way.

In 1687, in a Latin treatise on natural philosophy entitled "Principia," Sir Isaac Newton described this characteristic behavior of material things in the statement of his first law of motion:

> "Every body tends to remain at rest, or in uniform motion in a straight line, unless compelled by external force to change."

Why bring up Newton and his laws of motion when we are discussing fuzes? The reason is that every one of the forces that acts on a projectile fuze-from firing to impact—is an effect of inertia.

Let's begin by discussing setback (fig. 2-7, view A). When the propelling charge of the round tires, the fuzes and the projectile are at rest. As the hot gases expand, pressure in the chamber builds up and forces the projectile to move forward. But because of inertia, every particle of the projectile and the fuze tends to stay where it is. The effect is the same as what you feel while riding in a car when the driver stomps on the gas pedal. Your head snaps back as the car jerks forward The same thing happens in the projectile and its fuze, except that the acceleration—and the setback effect—are thousands of times greater. As an example of its application to fuzes, setback is used in mechanical time fuzes to unlock the clockwork mechanism.

Angular acceleration (fig. 2-7, view A) produces an inertia force accompanying the initial rotation of the projectile in the bore of the gun. It is similar in effect to setback, which is the resistance to forward motion, in that it resists the rotational motion of the projectile as it passes through the rifled bore.

As the projectile rotating band is twisted by the rifling of the gun bore, the projectile spins. You know how spinning develops centrifugal force (fig. 2-7, view B),—a tendency to fly directly away from the center of rotation. Centrifugal force is used to operate the clcckwork in most mechanical time fuzes. It is also used to assist in readying (arming) the fuze to function when it strikes or approaches the target.

Creep (fig. 2-7, view C) is another effect of inertia. Like anything else that moves through the air, a projectile in flight moves against air resistance, which tends to slow it down. Its supersonic speed creates shock waves and turbulence that increase this frictional slowing. This slowing-down effect is applied to the exterior of the projectile only. The parts inside are not overcoming any air resistance, so they do not tend to slow down. In an automobile, for example, when the brake (simulating air resistance) is being applied lightly, you tend to lean forward. Similarly, movable parts in a fuze tend to creep forward as the projectile plows through the air that slows it down. In many types of fuzes, creep force is used to align the fuze-firing mechanism so that it will function on impact.

Impact (fig. 2-7, view D) is probably the most obvious application of the general principle of inertia to fuzes. When the projectile strikes, it comes to a stop. But the movable parts inside the fuze tend to keep right ongoing. The force developed by impact is used when you drive a firing pin against a percussion cap to initiate the explosive train. Some people think of impact as a kind of creep—but in a very violent form. In principle, it is true that creep and impact are related, but they are quite different in degree and are used differently in fuze mechanisms. It is best to consider them separately and understand the function of each.

FUZE TYPES AND FUNCTIONING

Fuzes can be classified by functions as follows:

- Time fuzes: Mechanical time fuzes (MTFs) function a predetermined length of time after the projectile is fired. The exact time is set before the projectile is loaded into the chamber by a mechanical fuze setter on the mount. This fuse can also be set with a special fuze wrench. The interval between the instant the fuze is set and the instant the projectile is fired is termed dead time. No matter when, how, or by what it is set, the timing mechanism of a time fuze will not function until the projectile is fired.

  Time fuzes for larger caliber projectiles are driven by springs because the relatively slow rotation of these projectiles does not produce enough centrifugal force to run the clockwork reliably. Older time fuzes (no longer in use) consisted of slow-burning powder trains of adjustable length rather than clockwork. The powder was ignited by setback that drove a firing pin into a percussion cap.

- Proximity fuzes: Proximity or variable time fuzes (VTFs) are energized after the projectile is fired and function when the projectile approaches closely to the target.

- Percussion fuzes: Percussion or impact fuzes function either as the projectile strikes the target or after the projectile penetrates. Some fuzes (nondelay type) function immediately on contact with any thin material (for example, the thin sheet metal skin of an aircraft). Fuzes for armor-piercing projectiles, however, always incorporate a slight delay to keep the burster from going off until after penetration. These percussion fuzes can be located either on the nose (PDF) or the base (BDF) of the projectile.

- Combination fuzes: Combination fuzes incorporate both time and percussion features; that is, the fuze may go off either on impact or after the time set, whichever occurs first.

- Auxiliary fuzes: An auxiliary fuze (ADF), as the name implies, operates only in conjunction with other fuzes. In gun projectiles they form part of the explosive train and pass on the explosion initiated by another fuze

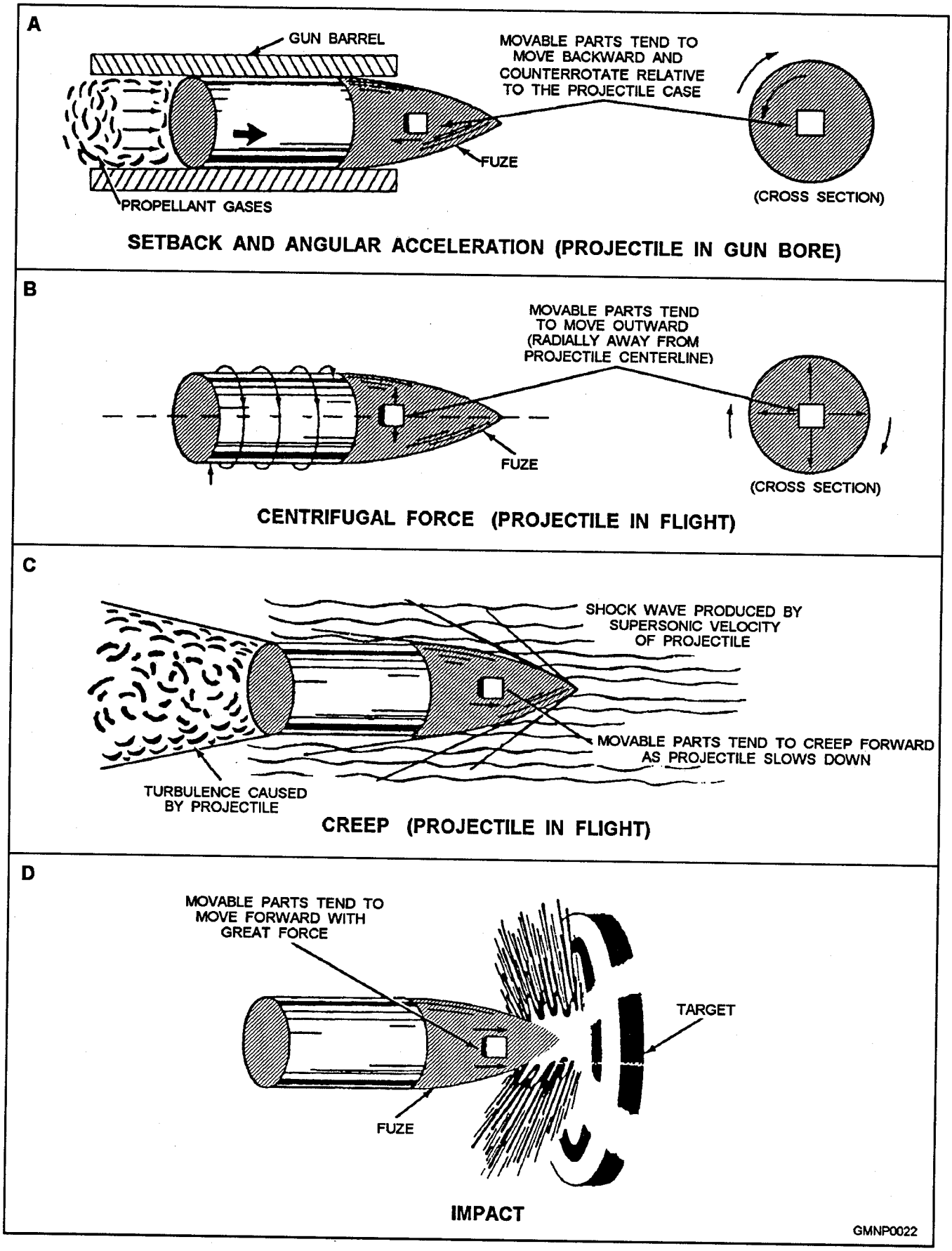

Figure 2-7.—Forces that work on fuzes.

(located in the projectile nose) to the main bursting charge.

Proximity fuzes in projectiles are miniature radio transmitters and receivers, powered by tiny battery cells. The cells are activated by setback. When the projectile approaches closely to a target, the radio waves sent out by a transmitter are reflected back to the receiver in sufficient strength to close a circuit that initiates fuze action.

Most projectile fuzes use a small detonating charge to set off the explosive train. These are called detonating fuzes. Some fuzes, however, are called ignition fuzes because they are designed to produce a flame that will set off an explosive sensitive to flame (usually black powder).

In general, proximity, time, and percussion fires are located in the projectile nose. ADFs are located just behind the nose fuze. In AP projectiles (the hardened cap makes no provision for nose fuzes) the fuze is in the base. In some projectiles, to provide greater versatility for selected targets, a nose and a base fuze are provided. The nose fuze can be inactivated at the gun for base fuze initiation. When the nose fuze is activated, the base fuze functions as a backup for greater reliability.

A fuze is intended not only to explode the burster charge at the right time, but it also is intended to prevent explosion at the wrong time. A fuze is armed when it is made ready to function. Before firing, when it is set not to function, it is considered safe.

Fuzes have safety features to protect those who handle ammunition. These safety features may be nullified by the time the projectile reaches the enemy. Some of the features are canceled by hand or mechanically before the gun is loaded. Others depend on the forces developed by the actual firing to arm the fuze. Fuzes that are armed only after the projectile leaves the gun muzzle are called boresafe. Projectiles 40-mm and larger are usually boresafe; projectiles 20-mm and smaller generally are not. This fact is important for you to remember when handling smaller caliber fuzed ammunition.

To illustrate how inertia is used to arm and operate a projectile fuze, let's look at a typical fuze (fig. 2-8). When the gun is fired, the force of setback moves the internal components of the fuze rearward and locks them against movement. As the projectile moves down the rifled bore, it is imparted rotation through the rotating band, creating centrifugal force. The projectile and fuze body travel through the air, meeting resistance and slowing down because of friction. The inertial force of creep frees the internal components for movement. Centrifugal force then moves the two sets of detents outward, unlocking the firing pin and detonator rotor for movement. Centrifugal force, acting on weights in the rotor, causes the rotor to turn until the detonator is in direct alignment between the firing pin and the booster lead-in. Continued centrifugal force maintains the explosive train in alignment. The fuze is armed Upon impact, the firing pin is driven into the detonator, initiating the explosive train through the explosive lead to the booster charge. The booster charge detonates the main burster charge.

Many different arrangements are used to arm both gun projectile and missile fuzes. All use the forces of inertia in one way or another. Some are totally mechanical and some are a combination of mechanical and electrical For further detailed information on fuze arming and operation, see U.S. *Navy Ammunition, Historical and Functional Data,* NAVSEA SW010-AB-GTP-010. More information on gun ammunition, including explosive charges, projectiles, and fuzes, is contained *in Ammunition Afloat,* NAVSEA OP 4, and *Navy Gun Ammunition,* NAVSEA SW030O-AA-MMO-010.

IDENTIFICATION OF AMMUNITION

LEARNING OBJECTIVE Recall the purpose and meaning of the ammunition lot numbering and color-coding systems.

A standard ammunition nomenclature and numbering system has been established by the Department of Defense (DOD). This system is a four-digit, alphanumeric code that will be either a DOD identification code (DODIC) assigned by the Defense Logistics Services Center (DLSC) or a Navy ammunition logistics code (NALC) assigned by the Ships Parts Control Center (SPCC). Some examples of DODIC/NALC nomenclature are as follows:

AMMUNITION TYPE	DODIC/NALC
5"/54 Illumination Projectile	D328
6"/50 BL&P Projectile	D873
12-gauge 00 Buckshot	A011

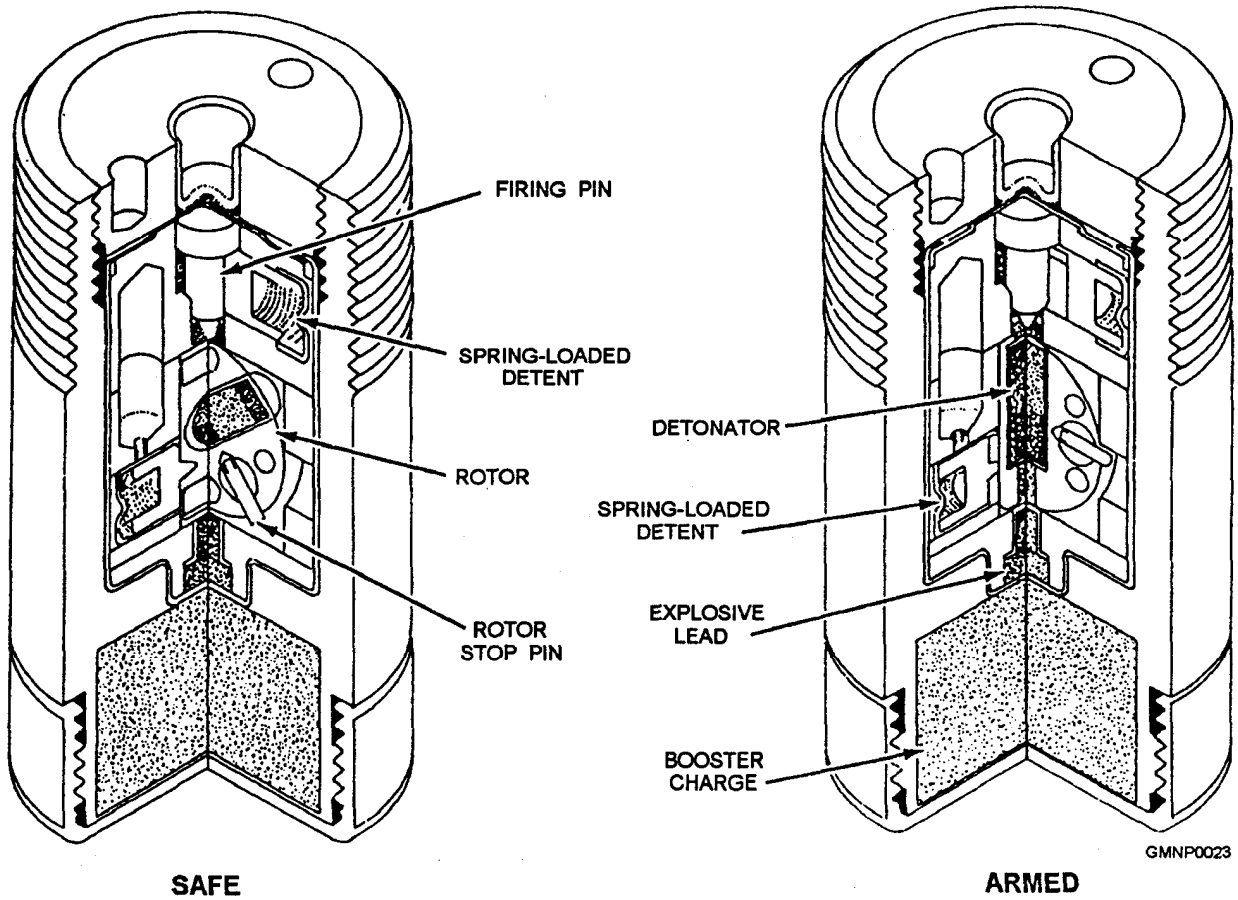

Figure 2-8.—Projectile base fuze.

AMMUNITION LOT NUMBERS

When ammunition is manufactured, an ammunition lot number is assigned according to specifications. As an essential part of the lettering, the lot number is stamped or marked on the item, size permitting, as well as on all packing containers. There are presently two ammunition lot numbering systems in the ammunition inventory. The newest lot numbering system was implemented by the Navy in 1978, so there is much ammunition still identified by the old ammunition lot numbering system. Both of these systems are described in the following paragraphs.

Current Ammunition Lot Numbering System

For all ammunition items and their components, the ammunition lot number consists of a manufacturer's identification symbol, a numeric code showing the year of production, an alpha code representing the month of production, a lot intermix number followed by a hyphen, a lot sequence number, and, when necessary, an alpha character used as an ammunition lot suffix to denote a reworked lot. The following illustrates the construction of a current ammunition lot number: AMC78D018-124B, where:

AMC78D018-124B

AMC	=	manufacturer's identification symbol
78	=	a two-digit numeric code identifying the year of production (1978)
D	=	a single alpha code signifying the month of production (April)
018	=	lot intermix number
124	=	lot sequence number
B	=	ammunition lot suffix (the alpha suffix)

Exceptions to the foregoing system for numbering ammunition lots are given in MIL-STD 1168, section 5.

Old Ammunition Lot Numbering System

The old ammunition lot numbering system consists of the ammunition lot number (ALN) symbol, followed by a two- to three-letter prefix, a sequential lot number, a one- to three-letter manufacturer's symbol, a two-numeral group, and, on some, a lot sufiix. An example of an ALN is BE-374-HAW-75, where:

BE-374-HAW-75		
BE	=	5-inch, 38-caliber AAC projectile
374	=	374 lot of AAC projectiles assembled
HAW	=	NAD Hawthorne assembly activity
75	=	assembled during the year of 1975

Prefix Designation. The two- to three-letter prefix designation identifies the size and type of ammunition item. A prefix designation having a final letter *R* denotes renovated items.

Sequential Lot Number. The one-to four-character group following the prefix indicates the sequential lot number of that particular type produced by an activity during the calendar year. This group consists of numbers 1 through 9999.

Manufacturer's Letters and Numbers. A one- to three-letter group identifies the ordnance activity that assembled the ammunition item.

Year Group. Following the manufacturer's symbols is the final numerical group, indicating the last two digits of the calendar year of assembly.

Lot Suffix. An alpha character, following the year of assembly, usually indicates that some type of special screening was performed.

Grand-Lot Designation. A grand-lot (GL) designation was assigned to serviceable remnant ammunition items of the same type after serviceability evaluation. These remnant lots are consolidated and reissued under a new ammunition lot number having a GL designation. GL ammunition is still in the supply system, but this procedure is no longer used.

COLOR CODES, MARKINGS, AND LETTERINGS

The system of identifying ammunition by the use of color codes, marking, and lettering is intended to be a ready identification to determine the explosive loads and hazards presented by each. A color-coding system is used to indicate the primary use of ammunition, the presence of a hazardous (explosive, flammable, irritant, or toxic) filler, and/or the color of tracers, dye loads, and signals. Current color coding for ammunition of 20-mm and larger is contained in MIL-STD-709, OP 2238 (latest revision), and WS 18782. The lettering, stenciled or stamped on ammunition, includes all the information necessary for complete identification and is marked in compliance with NATO standards and Department of Transportation (DOT) regulations. In addition to standard nomenclature and lot numbers, lettering may include such information as the mark and mod, the type of fuze, and the weapon in which the item is fired. Table 2-1 gives the meaning of the different color codes.

Table 2-1.—Ammunition Color Coding

COLOR	INTERPRETATION
Yellow	1. Identifies high explosives. 2. Indicates the presence of explosives, either, a. sufficient to cause the ammunition to function as a high explosive, or, b. particularly hazardous to the user.
Brown	1. Identifies rocket motors. 2. Indicates the presence of explosive, either, a. sufficient to cause the ammunition to function as a low explosive, or, b. particularly hazardous to the user.
Gray	Identifies ammunition that contains irritant or toxic agents when used as an overall body color except for underwater ordnance.
Gray With Red Band(s)	Indicates the ammunition contains an irritant (harassing) agent.
Gray With Dark Green Band(s)	Indicates the ammunition contains a toxic agent.
Black	Identifies armor-defeating ammunition, except on underwater ordnance.
Silver/Aluminum	Identifies countermeasures ammunition.
Light Green	Identifies smoke or marker ammunition.
Light Red	Identifies incendiary ammunition or indicates the presence of highly flammable material.
White	Identifies illuminating ammunition or ammunition producing a colored light; exceptions, underwater ordnance, guided missiles, and rocket motors.
Light Blue	Identifies ammunition used for training or firing practice.
Orange	Identifies ammunition used for tracking or recovery.
Bronze	Identifies dummy/drill/inert ammunition used for handling and loading training.
Nonsignificant Colors	
Olive Drab	All ammunition items.
Black	For lettering.
White	1. For lettering. 2. For guided missiles and rocket motors.

CONVENTIONAL AMMUNITION INTEGRATED MANAGEMENT SYSTEM (CAIMS)

LEARNING OBJECTIVE Recall the purpose of and procedures for using the CAIM system.

The maintenance of an accurate inventory of all explosive ordnance held by a fleet unit is the primary concern of everyone involved. The current CNO requirement is that units maintain a 99.5 percent inventory accuracy rate. Foundational to this requirement is the maintenance of the onboard ammunition stock record commonly referred to as the "ammunition ledger" or just "the ledger. " As ammunition is received expended, or transferred, the ledger is updated to reflect the change. 'These changes are then reported to the SPCC, Ammunition Division, for entry into the central computer. Each of these activities is a function of the Conventional Ammunition Integrated Management System (CAIMS). As a Gunner's Mate, you are involved in this process in two ways. First, you are responsible for making sure ammunition received, expended, or transferred is accurately identified by NALC/DODIC and lot number and that these quantities are reported to the ledger custodian as soon as possible after the event. Second, you may be tasked to maintain the ledger, especially at the second class petty officer level.

CAIMS is designed to be a management tool for all levels of the Navy that are concerned with inventory management. The *CAIMS Manual,* SPCCINST 8010.12, describes the system in detail and the procedures to be used by each type of activity in maintaining and reporting ammunition inventory information. In the following sections, we expand on the major elements of this system, describing their functions and how they interrelate.

AMMUNITION STOCK RECORD

The ammunition stock record (or ledger) is a fleet unit's master record of all ammunition stocks held, as well as a record of past transactions and inventories held The ledger consists of a master stock record card (MSRC) for each NALC or DODIC held by the unit and an ammunition lot or serial/location card for each different lot or serial number.

Master Stock Record Card

The MSRC (fig. 2-9) serves as a record of the total number of rounds of a certain NALC/DODIC held by the unit in each condition code. The MSRC is also used to record information identifying each transaction and the total quantity of ammunition ordered, received, transferred; or expended.

NAVSUP FORM 1296 (REV. 8-87) AMMUNITION MASTER STOCK RECORD CARD S/N 0108-LF-501-2961

ENTRY DATE	DOCUMENT NUMBER			TRANSACTIONS		ON-HAND BALANCES					ATR SERIAL	QUANTITY DUE IN	UNEXP TRAINING ALLOC
	ACTIVITY	DATE	SERIAL	TYPE	QUANTITY	COND. "A"	COND.	COND.	COND.	COND.			
BALANCE FORWARD													

PACKAGING - REMARKS	ALLOWANCE	90% OF SHIPFILL ALLOWANCE	ANNUAL TRAINING ALLOCATION

LOGISTICS CODE	COG	NIIN/NOMENCLATURE	MCC	ACC	DOT	NEW	STOWAGE LOCATION	C.G. HAZ CL

GMNP0024

Figure 2-9.—Ammunition master stock record card.

Ammunition Lot/Location Card

The ammunition lot/location card (fig. 2-10) is used to record the quantity and stowage location of an individual lot of ammunition. Transaction information is also recorded on this card but only for transactions concerning the lot listed.

Ammunition Serial/Location Card

The ammunition serial location card (fig. 2-11) is used to account for serialized items, such as missiles and torpedoes. Each card accounts for one item. In addition to maintaining an accurate inventory, these cards are used to record the maintenance-due date of the item covered The maintenance-due date indicates the date the item must be turned in to a weapons facility for inspection and any required maintenance.

Your ammunition ledger will most likely contain all three of these record cards. You will have one MSRC for each NALC and DODIC carried. These will be arranged in NALC/DODIC alphanumeric order in a binder or cabinet. Under each MSRC is an ammunition lot or serial number location card for each lot or serial-numbered item carried by NALC/DODIC. As ammunition is ordered, received, transferred, or expended, it is recorded on the cards. First, the total number of rounds involved is entered on the MSRC for that particular NALC/DODIC. The total number is then broken down by lot or serial number, and each different number is entered on the appropriate location card All entries are to be made in ink or typed These cards are required to be retained for a minimum of 1 year after the item is expended or transferred.

The cards in the ammunition ledger contain much more information than what has been presented here. Chapter 12 of SPCCINST 8010.12 provides detailed guidance on the makeup and maintenance of the ammunition ledger.

AMMUNITION TRANSACTION REPORTS (ATRs)

Each time a piece of ammunition is expended, transferred, received, or changes condition code, an ammunition transaction report (ATR) must be submitted to update CAIMS. This report is normally required to be done within 24 hours of the event. ATRs are sent by naval message according to the instructions listed in SPCCINST 8010.12, chapter 8. A copy of each ATR message is maintained in a file and kept with the ledger. The ledger and the ATR file must match 100 percent.

AMMUNITION REQUISITIONS

Fleet units requisition all nonnuclear ordnance using the Military Standard Requisitioning and Issuing Procedures (MILSTRIP) format in a naval message.

NAVSUP FORM 1297 (REV. 8-87) AMMUNITION LOT/LOCATION CARD S/N 0108-LF-501-2971

ENTRY DATE	DOCUMENT NUMBER			TRANSACTIONS		ON-HAND BALANCES				CONSIGNOR CONSIGNEE	REMARKS
	ACTIVITY	DATE	SERIAL	TYPE	QUANTITY	COND.	COND.	COND.	COND.		

PACKAGING - REMARKS NEW

LOGISTICS CODE	NIIN/NOMENCLATURE	LOT NO.	STOWAGE LOCATION	C.G. HAZ CL.

Figure 2-10.—Ammunition lot/location card.

SPCC-.8010/107 (REV 6-86) LOCAL

AMMUNITION SERIAL/LOCATION CARD

REGISTER/SERIAL NUMBER	MAINT DUE DATE YY MM	COND CODE	RECEIPT		ISSUE/TRANSFER		TRANSACTIONS		OTHER ACTIONS	
			RECEIVED FROM	DATE	ISSUED TO	DATE	TYPE	DATE	ACTION	DATE

PACKAGING

LOGISTICS CODE	NIIN/NOMENCLATURE	STOWAGE LOCATION	C.G. HAZ. CL.

GMNP0026

Figure 2-11.—Ammunition serial/location card.

MILSTRIP relies upon coded data for processing requisitions by means of automatic data processing equipment. Each ship is provided with an ammunition allowance list of one form or another, depending on its status/mission. The ship-fall allowance list is the one you will be primarily concerned with. It lists the ammunition types and quantities authorized for issue in support of the mission of the ship. This list includes the training allowance. All ammunition requisitions must be made with the allowance list in mind. Training allowance increases may be requested.

At this writing, ammunition recording, requisitioning, and reporting are in the process of being automated throughout the fleet. The ordnance manager will maintain his or her ledger and generate requisitions and ATRs all from the same computer terminal. The format, however, will remain the same.

There are many requirements and special instructions involved in the preparation of an ammunition requisition. The mechanics of requisitioning ammunition are well beyond the scope of this manual. Refer to chapter 8 of SPCCINST 8010.12 for detailed information concerning ammunition MILSTRIP requisitions. Your supply officer and the ships Storekeepers (Sks) are also excellent sources of expertise concerning requisitions.

SHIPBOARD AMMUNITION INSPECTION

LEARNING OBJECTIVE Recall the requirements, procedures, and information sources governing magazine and ammunition inspections, inventories, requisitions, and inventory control.

During the late 1960s and early 1970s, the U.S. Navy experienced several catastrophic explosions on its ships. As a result of ensuing investigations, several pertinent facts were disclosed. It was determined that an apparent lack of understanding existed regarding the inspection of ammunition. Gunnery personnel were not familiar with the principle of the gas-check system in the base of projectiles or were not familiar with the gun ammunition lot number system and the notice of ammunition reclassification (NAR) in TWO24-AA-ORD-010. Results of the investigation indicated that increased understanding was required.

From the foregoing it can be seen that all GMs 3 and 2 should make every effort to increase their knowledge of gun ammunition by seeking out and studying all available Ops, Ods, and instructions. Gaining this knowledge is not only beneficial to you in self-satisfaction but also in knowing the proper procedures for the care and handling of ammunition and the steps to be taken in emergencies.

An important point to remember is that ammunition in any form is dangerous unless it is properly tended. Any deviation from authorized procedures can lead to problems. Minor unauthorized acts can establish a train of events that can eventually cause a magazine to blow. Therefore, it is imperative that ordnance personnel follow standard operating procedures exactly. If any doubt exists, contact the nearest ammunition facility for guidance.

NAVSEA has directed the mandatory inspection of 5-inch, high-explosive-loaded projectiles with gas-check seals (GCSs) before issue by NAVSEA activities or an overseas ammunition issuing activity. Gun projectiles fitted with abase fuze or base plug are equipped with a GCS to prevent hot propellant gases from penetrating into the explosive cavity of the projectile body. This GCS inspection by experienced ammunition personnel includes sighting that (1) the GCS is not missing, (2) the GCS is symmetrical and properly seated, (3) the GCS is not cracked, cut or tom, and (4) the BDF or base fuze hole plug (BFHP) is flush or slightly below the projectile base. After inspection, issuing activities ashore certify a good GCS by applying a suffix (either A or B) to the projectile and on the data card, according to TWO24-AA-ORD-010, as appropriate.

To safeguard against damage during subsequent handling and the possibility of sabotage, the firing ship should, before use, examine each 5-inch high explosive loaded projectile for proper GCS. A complete description of GCS inspection procedures is provided in *Navy Gun Ammunition*, NAVSEA SW030-AA-MMO-010. Ordnance personnel should also check ammunition to see that (1) waterproof protecting caps are properly installed, (2) nose fuzes are properly seated and not loose, (3) upper nose caps of fuzes are intact, and (4) complete rounds can be identified by lot identification number. This system of identification is simple, but it requires study to understand and must be followed to be effective.

MAGAZINES

LEARNING OBJECTIVE Recall the types, designations, security measures, and inspection criteria for shipboard magazines.

The term magazine applies to any compartment, space, or locker that is used, or intended to be used, for the stowage of explosives or ammunition of any kind.

The term *magazine area* includes the compartment, spaces, or passages on board ship containing magazine entrances that are intended to be used for the handling and passing of ammunition. The term is also used to denote areas adjacent to, or surrounding, explosive stowages, including loaded ammunition lighters, trucks, and railroad cars, where applicable safety measures are required.

Magazines are arranged with regard to facility of supply, the best obtainable protection, and the most favorable stowage conditions.

MAGAZINE TYPES

There are many different types of magazines provided on ships. Each magazine is designed specifically for the type of ammunition it is to contain. For our purpose, however, we will be concerned with only three types-primary magazines, ready-service magazines, and ready-service stowage.

Primary Magazines

Primary magazines are designed as ammunition stowage spaces, generally located below the main deck, and insofar as is practical, below the waterline. They are adequately equipped with insulation, ventilation, and sprinkler systems. These spaces must be provided with fittings so that they may be locked securely. Primary magazines accommodate a vessels complete allowance of ammunition for peacetime operation.

Ready-Service Magazines

Ready-service magazines are spaces physically convenient to the weapons they serve. They provide permanent stowage for part of the ammunition allowance. Normally they are equipped with insulation, ventilation, and ammunition sprinkler systems, and should be secured by locking. The combined capacities of primary and ready-service magazines are normally sufficient to stow the ships allowance for war and emergencies.

Ready-Service Stowage

Ready-service stowages are those ammunition stowage facilities in the immediate vicinity of the

weapon served. They include weather deck lockers, bulwark (gun shield) racks, and 5-inch upper handling rooms. This stowage normally is filled only when the weapon is to be fried. There is little security for ammunition in such stowage, and it provides the least favorable protection from the elements.

All magazines are marked by appropriate label plates showing the compartment number and the types of ammunition to be stowed therein. Insofar as is practical, magazines are designed to hold a single type of ammunition.

MAGAZINE DESIGNATIONS

The following designations are given for magazines whenever a single-purpose stowage is practical:

- Powder magazines
- Fixed-ammunition magazines
- Small-arms magazines
- Warhead lockers
- Projectile magazines or rooms
- Bomb magazines
- Missile magazines
- Fuze magazines
- Detonator lockers
- Pyrotechnic magazines or lockers

While stowage of a single type of ammunition in individual magazines is desirable, it is not always possible due to space limitations. Where a ships mission requires carrying various types of ammunition, stowage of more than one type in one magazine is acceptable. Current NAVSEASYSCOM instructions authorize certain mixed stowage in magazines that maintain a single-purpose designation.

Authorization of mixed stowage is at the discretion of the operational commander. Such stowage does not include pyrotechnics that have been removed from containers, or fuzes and detonators that are not integral parts of, or assembled within, the ammunition. These items must be stowed according to the current instructions related to the particular items.

Where mixed stowage of ammunition is necessary, precautions should be taken to make sure the various types of ammunition are segregated within the magazine and each type is suitably marked for ready identification. All specific questions concerning stowage requirements should be referred to *Ammunition Afloat,* NAVSEA OP-4.

MAGAZINE SECURITY

In peacetime, all magazines, explosive lockers, ready-service lockers, and all areas, such as ammunition hoists, leading into magazine spaces are kept closed and locked, except when they are opened for inspection, for ventilating purposes, for testing, or for authorized work. These spaces are not entered unnecessarily and are opened only when authorized by the weapons officer. The weapons officer is responsible for making sure that the spaces are locked when the purpose for which it was opened has been accomplished

Magazines are intended for the stowage of ammunition and for this purpose only. A magazine is no place for the stowage of empty paint or grease cans, oily waste rags, or similar fire hazards. What goes for material also goes for personnel. No one but those authorized should ever be permitted in a magazine. Even they should be there only when they have business there. A magazine is no place to sit around and "shoot the breeze."

The commanding officer (CO) is the custodian of all magazine keys. The CO may, however, designate certain persons under his or her command to have custody of duplicate keys. Each morning keys are drawn by a responsible Gunner's Mate for the purpose of inspecting magazines and taking magazine temperatures.

SECURITY OF NUCLEAR WEAPONS MAGAZINES

With the rapidly changing world political picture, nuclear weapons have begun to be considered as less of a necessary component of the U.S. ready arsenal. At this writing, the president has ordered the removal of most nuclear weapons from U.S. surface ships. Therefore, we will provide only a brief description of the security requirements and procedures pertaining to surface ship nuclear weapons.

Nuclear weapons, because of their strategic importance, public safety considerations, and political implications, require greater protection than their security classification alone would warrant. The special shipboard installations required for the safety and security of these weapons vary with the type of ship and weapons involved. As a GM, your association with nuclear weapons will be limited. However, it is possible that because you are in the GM rating, you might be called upon to take part in the safety and security program for nuclear weapons on a ship.

The following discussion provides a basis for determining the minimum security requirements for nuclear weapon spaces. The definitions that follow are those used throughout the Navy in connection with nuclear weapons:

- Access: Applied to nuclear weapons, physical access that permits the opportunity to cause a nuclear detonation.

- Exclusion area: A security area that contains one or more nuclear weapons or one or more components of a nuclear weapon system. The nature of the area is such that mere entry constitutes access to the nuclear weapon or permits the arming, launching, or firing of a weapon.

- Controlled area: A security area that surrounds an exclusion area. Aboard ship, this area includes the entire ship when nuclear weapons are on board. When onloading or offloading nuclear weapons alongside a pier, the controlled area is extended to the pier.

- Nuclear weapon. Any complete assembly of its intended ultimate configuration that, upon completion of the prescribed arming, fuzing, and firing sequence, is capable of producing the intended nuclear reaction and release of energy.

Safety and security are considered to be synonymous when it comes to nuclear weapons. The main objective is to prevent an inadvertent or deliberate nuclear accident or incident. The standards governing the installation of safety equipment and facilities for protecting nuclear weapons must be according to the criteria set forth in current NAVSEA and OPNAV instructions.

INSPECTION OF MAGAZINES

The periodic (daily, weekly, monthly, bimonthly, quarterly, semiannual, or annual) inspections of magazines and their contents should be conducted aboard ship and ashore according to instructions contained in applicable publications and 3-M Systems requirements. The primary source of magazine inspection criterion is the appropriate 3-M Systems maintenance requirement cards (MRCs). These procedures are derived from the standards listed in other source publications, such as *Ammunition Afloat*, NAVSEA OP-4.

Magazine Temperatures

The main purpose of a daily magazine inspection is to check and record space temperatures. If you recall, temperature is the single most important factor that affects powder and propellant stability.

Temperature readings normally are taken once a day. The exact time may vary, but most ships take the readings in the morning (around 0800, for example). A special maximum and minimum thermometer is used. (Sometimes it's called a high-low thermometer.) Figure 2-12 illustrates a typical maximum and minimum thermometer.

Every magazine or locker will have at least one such direct-reading thermometer. It will be located where maximum space temperature variations will normally occur. It must be installed so it is readily accessible for taking readings and resetting the index pointers. Special brackets are available to mount the thermometer where accidental damage can be prevented.

View A of figure 2-12 shows the internal components of the device. The temperature-sensitive element is a single-helix low-mass coil. The coil fits closely inside the thermometer stem. The bimetal element is carefully sized and aged for lifetime stability. The element is covered with a fluid to assure good heat transfer. The fluid also permits maximum speed of response and reduces pointer oscillations caused by

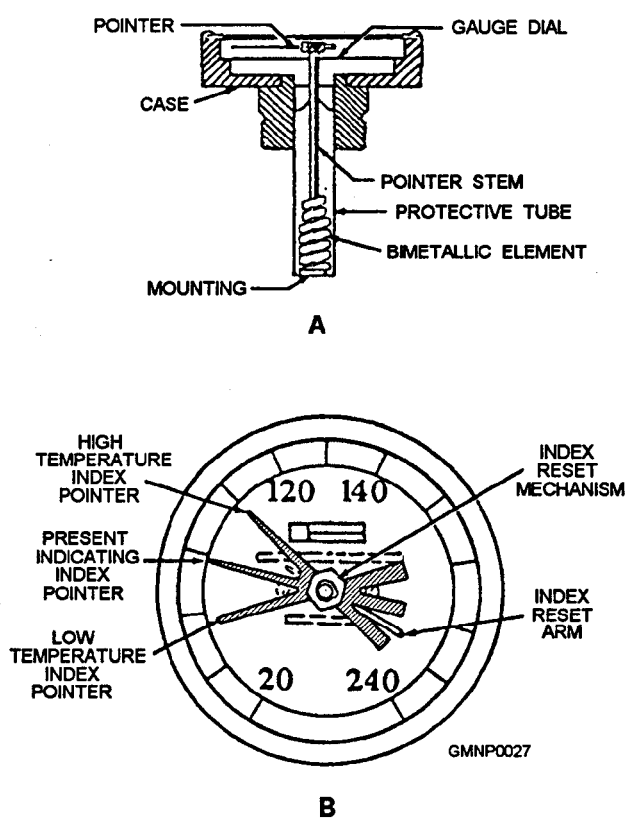

Figure 2-12.—Bimetallic maximum and minimum thermometer: A. Internal components; B. Dial fats and pointers.

outside vibrations. The case and stem are made of stainless steel for strength and anticorrosion purposes.

View B of figure 2-12 illustrates the dial face of the thermometer. It is 3 inches in diameter. A plastic window protects the index pointers. The index reset arm is on the outside of the window and is used to reset the high-low pointers. Temperature graduations on our example are marked off in 20-degree increments. The approximate readings on this thermometer are 100°F, high; 78°F, present; and 55°F, low. After you record these temperatures, reset the high and low pointers in line with the present pointer. As temperature rises during the day, the present pointer pushes the high pointer up the scale. As temperature falls during the night, the present pointer reverses direction. It now pushes the low pointer down the scale. As the sun comes up, the present pointer moves up the scale. Thus we see three different temperature readings reflecting the temperature variations throughout a 24-hour period.

The 45-degree spread between the high and low pointers in our example is a bit large, but illustrated for clarity in our explanation. However, it could happen. The reading you must be cautious about is the 100°F high. The magazine air-conditioning (A/C) or ventilating system should be turned on in this instance. The optimum temperature should be around 70°F. If the A/C system is not working, artificial cooling (fans, blowers) might have to be used.

The bimetallic maximum and minimum thermometer described is becoming the standard thermometer in shipboard magazines. You may come across a different model. It only has a maximum (high) index pointer and a reset knob. This type of thermometer is acceptable. The older liquid-in-glass (tube) mercury high-low thermometer is no longer authorized for shipboard use. These mercury units should be replaced with the bimetallic-type thermometer.

Records of Magazine Inspections

Like other maintenance procedures, magazine inspections and ammunition surveillance operations are performed periodically according to a prescribed 3-M schedule. The magazine inspections and surveillance operations presently prescribed for all United States naval vessels are listed in OP 4 and on applicable MRCs.

Written records must be kept of all maintenance operations, whether they are routine or not. As far as magazine inspections and ammunition surveillance are concerned, the most common written record is the daily magazine temperature report form (fig. 2-13) and

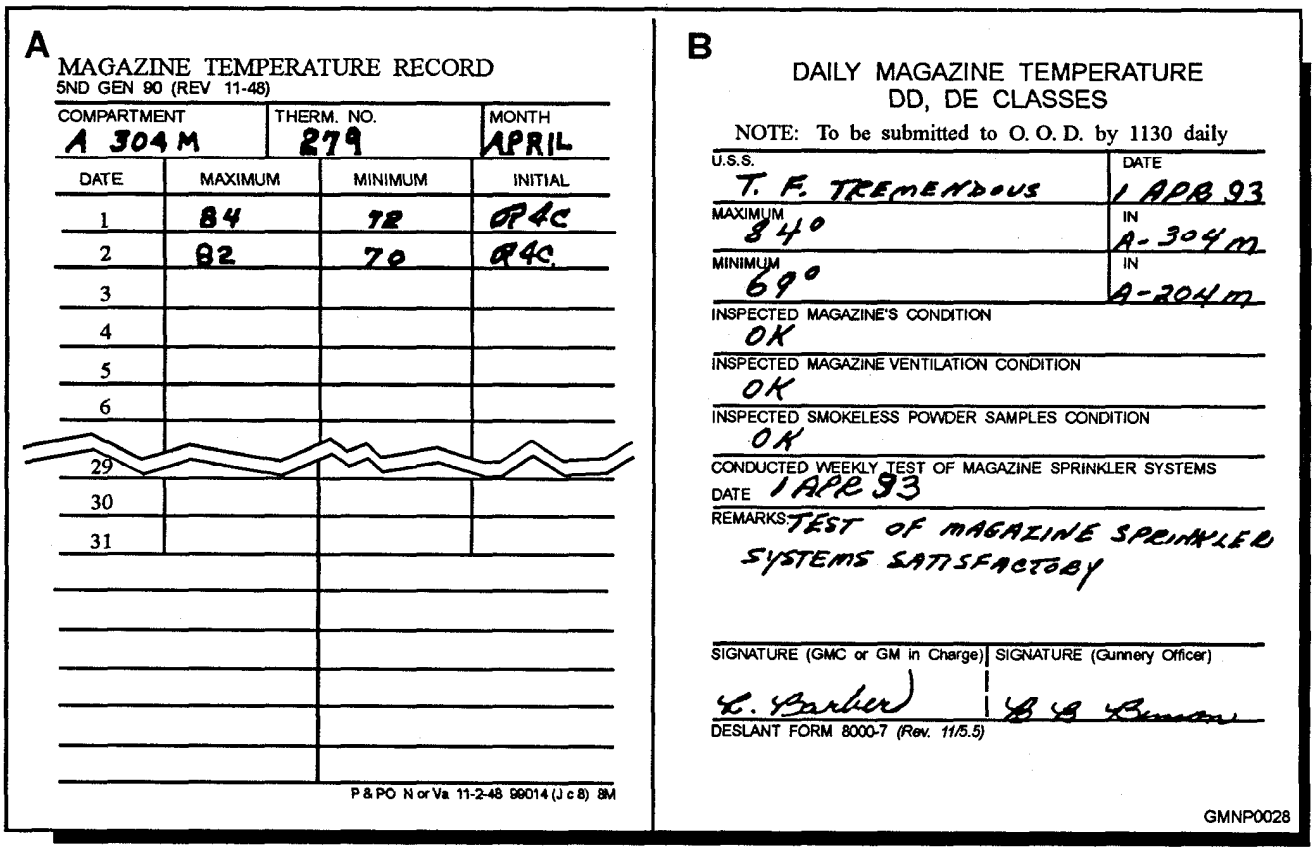

A

MAGAZINE TEMPERATURE RECORD
5ND GEN 90 (REV 11-48)

COMPARTMENT	THERM. NO.	MONTH
A 304 M	279	APRIL

DATE	MAXIMUM	MINIMUM	INITIAL
1	84	72	RAC
2	82	70	RAC
3			
4			
5			
6			
29			
30			
31			

P & PO N or Va 11-2-48 99014 (J c 8) 8M

B

DAILY MAGAZINE TEMPERATURE
DD, DE CLASSES

NOTE: To be submitted to O. O. D. by 1130 daily

U.S.S. T. F. TREMENDOUS — DATE 1 APR 93

MAXIMUM 84° — IN A-304m

MINIMUM 69° — IN A-204m

INSPECTED MAGAZINE'S CONDITION: OK

INSPECTED MAGAZINE VENTILATION CONDITION: OK

INSPECTED SMOKELESS POWDER SAMPLES CONDITION: OK

CONDUCTED WEEKLY TEST OF MAGAZINE SPRINKLER SYSTEMS
DATE 1 APR 93

REMARKS: TEST OF MAGAZINE SPRINKLER SYSTEMS SATISFACTORY

SIGNATURE (GMC or GM in Charge): C. Barber
SIGNATURE (Gunnery Officer): B. B. Brown

DESLANT FORM 8000-7 (Rev. 11/5.5)

GMNP0028

Figure 2-13.—A. The magazine temperature record; B. Daily magazine temperature report.

magazine temperature record. 3-M Systems records may also be considered as records of magazine inspection.

The magazine temperature record is a card posted in each magazine. Every day you enter the maximum and minimum temperatures recorded for the previous 24 hours in that magazine. The card is replaced every month, and the old one is turned over to the weapons officer.

The daily magazine temperature report summarizes the results of magazine inspections for the whole ship. This form includes not only spaces for entering the highest and lowest magazine temperatures but also for reporting the condition of the magazines and their ventilating devices, and (under Remarks) for miscellaneous nondaily routine work.

The daily magazine temperatures are transferred from the record cards to a magazine log that is a permanent record of all magazine temperatures. A separate section of the magazine log should be set aside to record the results of the monthly sprinkler system tests.

Magazines are considered to be in satisfactory condition if inspection shows the space meets the requirements listed on applicable MRCs. Daily inspection requirements usually include checking the general condition and cleanliness of the space. Less frequent inspections (monthly, quarterly, and so on) normally direct a more detailed check of specific magazine conditions and equipment. Each 3-M inspection requirement should be completely understood and followed to the letter. Doing so not only ensures a safe ammunition storage area but also fulfills the requirements of periodic inspections, such as the explosive safety inspection (ESI). ESI inspectors use the same inspection criteria as are found on your MRCs.

MAGAZINE SPRINKLER SYSTEM

LEARNING OBJECTIVES: Recall the purpose, components, and functioning of shipboard magazine sprinkler systems. Identify the various control valves, gauges, and alarm systems.

Sprinkler systems are used for emergency cooling and fire fighting in magazines, ready-service rooms, and ammunition- and missile-handling areas. A magazine sprinkler system consists of a network of pipes secured to the overhead and connected by a sprinkler system control valve to the ships saltwater firemain. The pipes are fitted with sprinkler head valves that are arranged so that the water forced through them showers all parts of the magazine or ammunition- and missile-handling areas. A modern sprinkler system can wet down all exposed bulkheads at the rate of 2 gallons per minute per square foot and can sprinkle the deck area at the rate of 4 gallons per minute per square foot. Magazine sprinkler systems are designed to flood their designed spaces completely within an hour. To prevent unnecessary flooding of adjacent areas, all compartments equipped with sprinkler systems are watertight. Upper deck-handling and ready-service rooms are equipped with drains that limit the maximum water level to a few inches. Magazines are completely encloses if flooded, they would be exposed to the full firemain pressure. The firemain pressure on most ships is considerably higher than the pressure magazine bulkheads could withstand therefore, magazines are equipped with exhaust ventilators located in the bulkhead near the overhead. An exhaust ventilator is a pipe with a check valve that permits pressure release (usually to topside). Since the diameter of the pipe is large enough to allow water to flow out as fast as it flows in, no excess pressure can build up in the magazine compartment.

On newer ships, magazines are also equipped with small, capped drainpipes located in the bulkhead near the deck. The caps may be removed in the adjacent compartment to drain flooded magazines.

In their complexity, the sprinkler system control valve and associated components vary with the type of ammunition intended for stowage in the magazine.

The basic type of hydraulically controlled saltwater/seawater-operated sprinkler system is the dry type. The dry type is normally installed in gun ammunition magazines and in missile magazines. For this reason, only the dry type is covered in this chapter. Technical information on other types of sprinkler systems is contained in *Magazine Sprinkler System*, NAVSEA S9522-AA-HBK-010.

The remaining coverage of sprinkler systems is presented as follows:

- Magazine sprinkler control valves (commonly refereed to as main valves)
- Hydraulic (saltwater/seawater) control systems
- Automatic (thermopneumatic) control systems
- Sprinkler alarm systems

MAGAZINE SPRINKLER CONTROL VALVES

Magazine sprinkler valves are normally closed, globe-type valves that are designed to open wide upon actuation and supply seawater to the sprinkler system. They are diaphragm operated and manufactured by either the CLA-VAL or Bailey Company. Both valves open on a minimum operating pressure of 40 psi. Each of these valves is held closed by the combined force of the valve spring and the firemain pressure acting on top of the valve disk.

The diaphragm-operated control valve (fig. 2-14) is held closed by firemain pressure acting against the valve disk and the valve spring force acting against the upper diaphragm washer. When the control system is actuated, seawater from the firemain (operating pressure) enters the diaphragm chamber and acts against the lower diaphragm washer. The area of the lower diaphragm washer is larger than the area of the valve disk Accordingly, the magnitude of the resultant upward force is sufficient to overcome the downward forces of the valve spring and the firemain pressure acting against the valve disk. When the control system is secured, the operating pressure is bled from the diaphragm chamber and the valve is closed by the force of the valve spring.

NOTE

The test casting or test fittings for the Bailey and CLA-VAL models are NOT interchangeable.

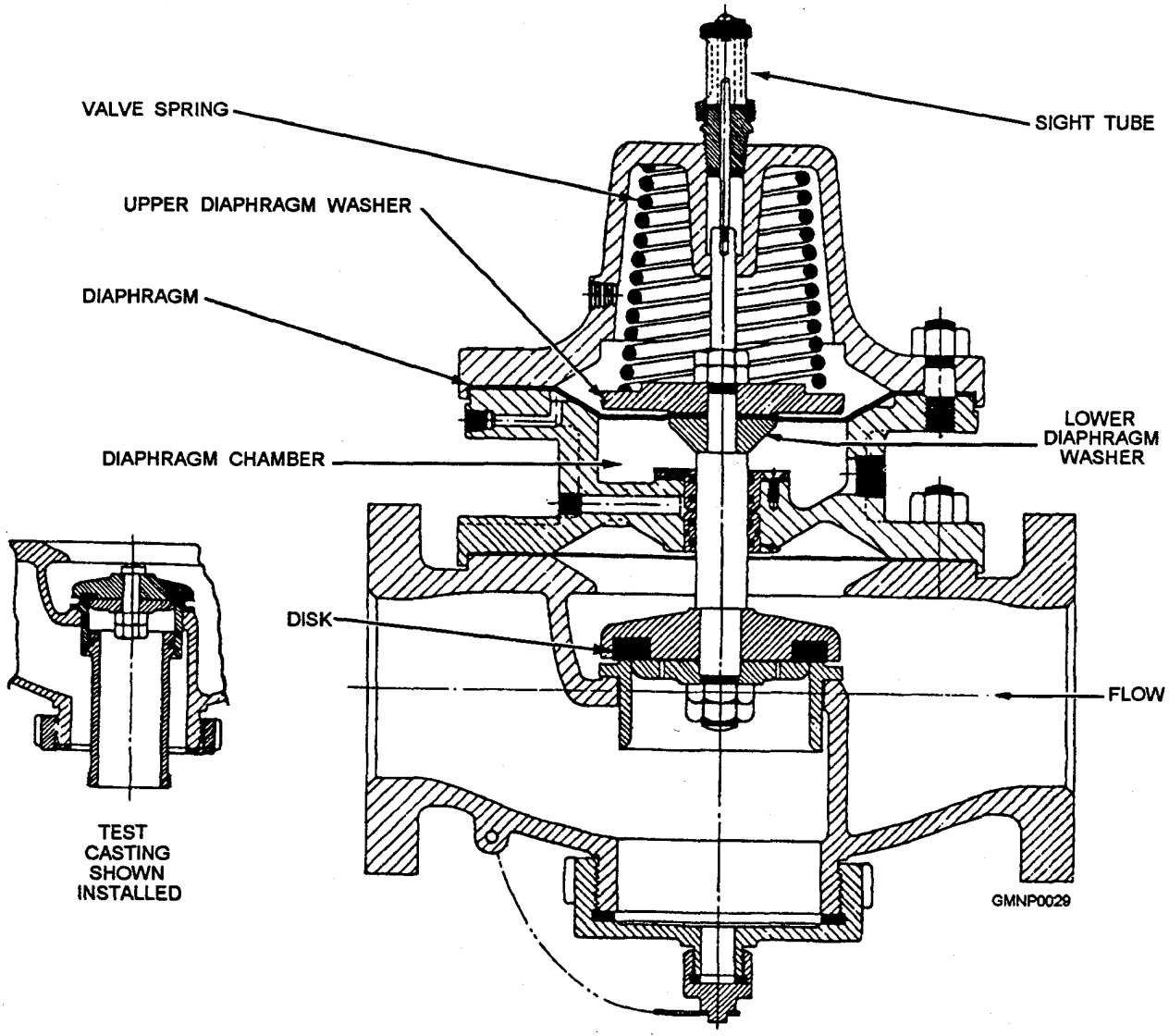

Figure 2-14.—Diaphragm-operated magazine sprinkler control valve.

HYDRAULIC CONTROL SYSTEM

The hydraulic control system is installed to permit rapid actuation of the dry-type magazine sprinkler system. It uses seawater from the firemain for the operating pressure to actuate or secure the magazine sprinkler system.

The hydraulic control system (which is better known as the operating pressure circuit) consists of the control system piping, manual control valve, hydraulically operated remote control valve, spring-loaded lift check valves, and a hydraulically operated check valve (normally used with the diaphragm-operated magazine sprinkler valve) or a power-operated check valve (normally used with the piston-operated magazine sprinkler valve).

Operating Pressure Circuit (Control System Piping)

The operating pressure circuit connects the manual control valves, the hydraulically operated components of the control system, and the magazine sprinkler valve. The operating pressure circuit is divided into an open and a close loop. The open loop transmits operating pressure from the open port of the manual control valve(s) to the operating chamber of the magazine sprinkler valve and the inlet of the hydraulically operated check valve via the hydraulically operated remote control valve. The close loop transmits operating pressure from the close part of the manual control valve(s) to the operating pressure connections of the hydraulically operated remote control valve and the hydraulically operated check valve.

Manual Control Valves

The manual control valve is a rotary disk plate-type valve that is installed to permit rapid hydraulic operation of the magazine sprinkler valve. Most systems allow manual sprinkler activation and securing from either a local operating station or a remote station. This application uses the three-way, three-position manual control valve (fig. 2-15). Applications that do not incorporate a remote manual control station or an automatic control feature use a three-way, two-position manual control valve.

A locking device, in the form of a key, is installed in the control valve handle to prevent accidental operation of the sprinkler system. The locking key is secured to the handle with a single strand lead wire seal and fastened to the valve cover by means of a safety chain,

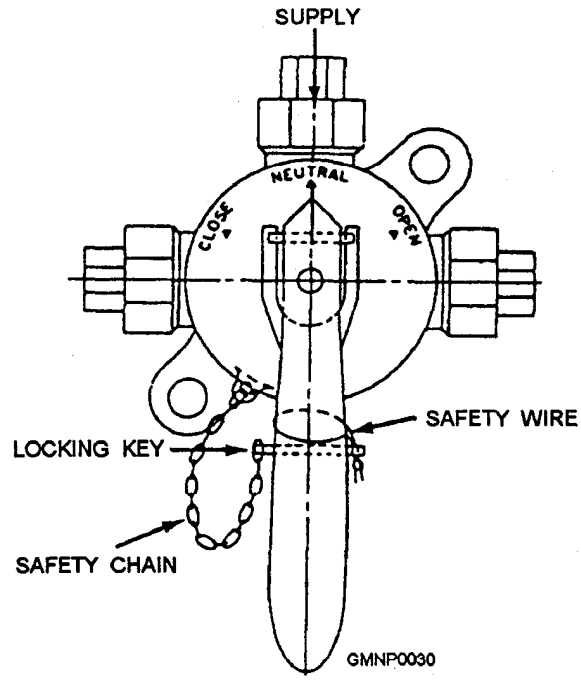

figure 2-15.—Manual control valve.

Hydraulically Operated Remote Control Valve

The hydraulically operated remote control valve (fig. 2-16) is a diaphragm-operated, globe-type valve that is opened by operating pressure acting against the underside of the disk and closed by operating pressure acting on the top of the diaphragm. The purpose of this valve is to permit the magazine sprinkler valve to be secured from an operating station other than the one from which it was actuated Additionally, this valve permits the magazine sprinkler valve to be secured from

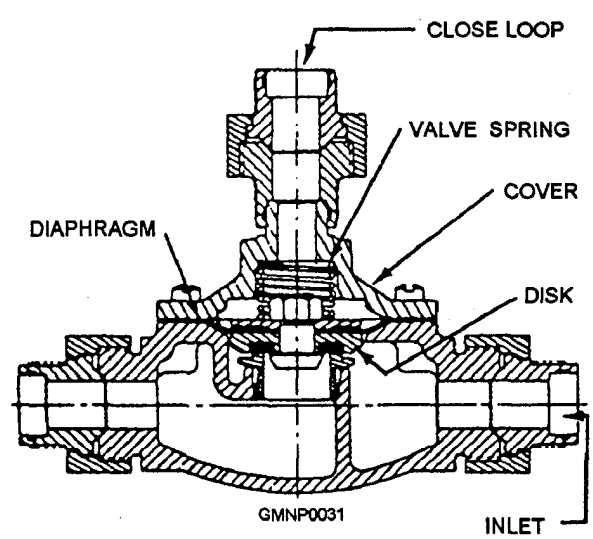

Figure 2-16.—Hydraulically operated remote control valve

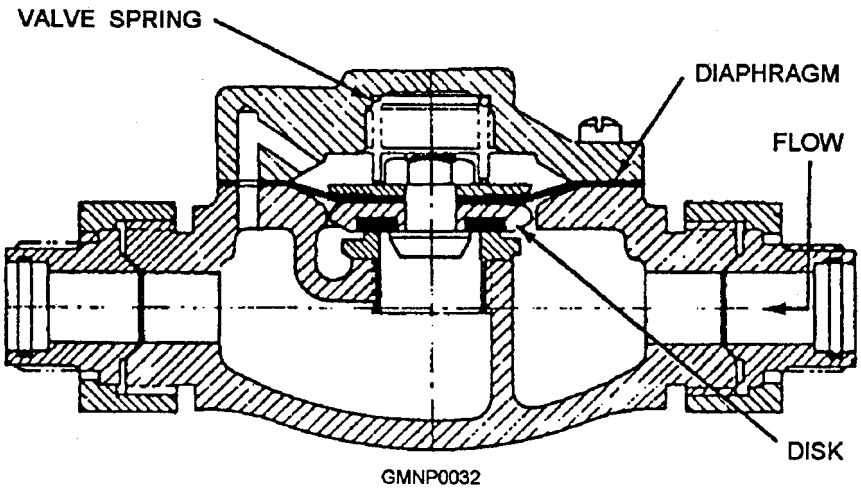

Figure 2-17.—Spring-loaded lift check valve,

any control station when it has been actuated automatically.

Spring-Loaded Lift Check Valves

This valve (fig. 2-17) is a spring-loaded, diaphragm-operated lift check valve that closes tightly against reverse flow and opens wide to permit flow in the normal direction. Spring-loaded lift check valves permit the control system to be operated from more than one control station by preventing backflow through the other stations.

Hydraulically Operated Check Valves

The hydraulically operated check valve (fig. 2-18) is a normally closed, diaphragm-operated, globe-type check valve that is opened by operating pressure in the close loop acting against the underside of the diaphragm. This valve permits the operating pressure to be vented from the diaphragm chamber of the magazine sprinkler valve, thereby permitting that valve to close rapidly and completely. This valve is normally installed in conjunction with the diaphragm-operated magazine sprinkler valve.

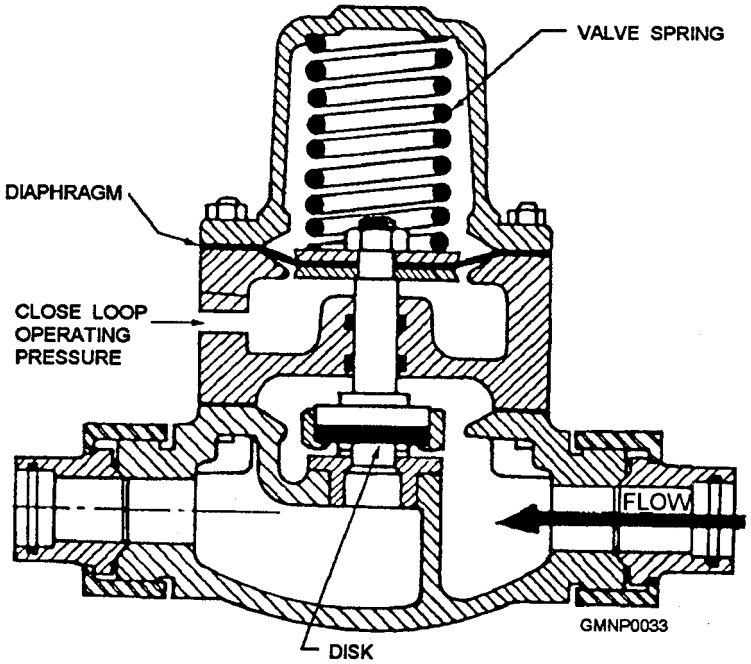

Figure 2-18.—Hydraulically operated check valve.

Power-Operated Check Valves

The power-operated check valve (fig. 2-19) is a normally closed, piston-operated, poppet-type valve that is opened by operating pressure from the close loop of the operating pressure circuit acting against the piston. When the valve opens, the operating pressure is released from the piston of the magazine sprinkler valve, thereby permitting the valve to close completely. This valve is normally installed in conjunction with the piston-operated magazine sprinkler valve.

Orifices

There are two 0.098-inch orifices installed in the control system piping. The primary purpose of the orifices is to prevent a buildup of pressure in the control system piping as a result of leakage past a control system component. Additionally, the orifices serve to vent the operating pressure from the control system piping when the manual control valve is returned to the NEUTRAL position. Orifice No. 1 is installed in the open loop upstream from the hydraulically operated check valve. Orifice No. 2 is installed in the close loop adjacent to the operating pressure connection of the hydraulically operated check valve. When the control system is actuated, there will be a steady flow of water from orifice/drain line No. 1 and no flow from orifice/drain line No. 2. When the control system is secured, there will be a steady flow of water from orifice/drain line No. 2 and a diminishing flow from orifice/drain line No. 1. When the manual control valve is returned to the NEUTRAL position, the operating pressure is vented from the close loop via orifice/drain line No. 2, thereby permitting the hydraulically operated check valve to close.

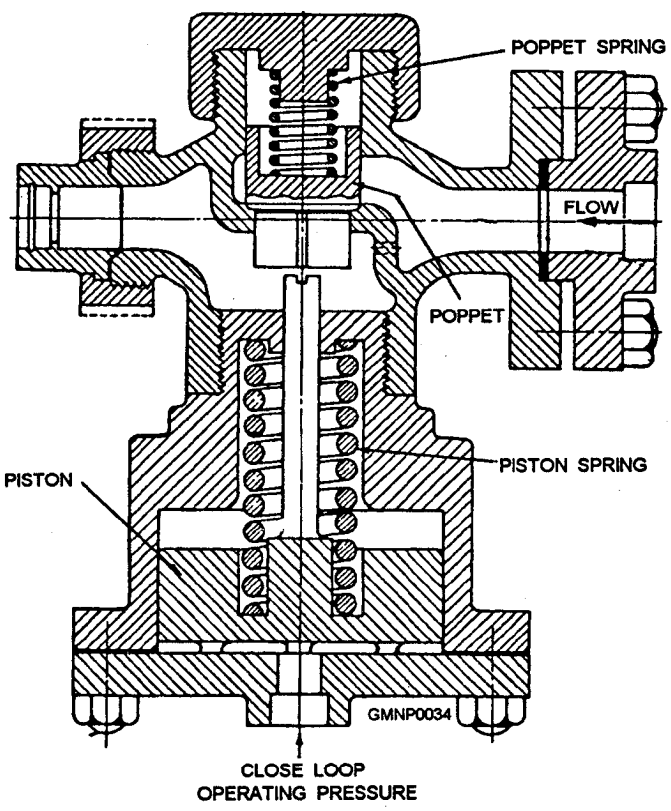

Figure 2-19.—Power-operated check valve.

The orifices and valves of the hydraulic control system described in this section are illustrated in figure 2-20 by symbols. Pay particular note to the legend list for the symbols. In addition to the orifices and valves, this figure also identifies the open and close loops of the operating pressure circuit.

AUTOMATIC (THERMOPNEUMATIC) CONTROL SYSTEM

Most gun magazine sprinkler systems are equipped with an automatic control system. This control system is designed to actuate the magazine sprinkler system in response to either a rapid rate of rise in temperature or a slow rise to a fixed temperature. The thermopneumatic elements, which monitor the temperature of the magazine and activate the sprinkler system, generate a pneumatic signal in response to thermal action. The pneumatic signal can be either a sudden increase or decrease in air pressure.

The automatic control system consists of heat-sensing devices (HSDs), transmission lines (rockbestos or rockhide-covered copper tubing), circle seal check valves, and a pneumatically released pilot (PRP) valve.

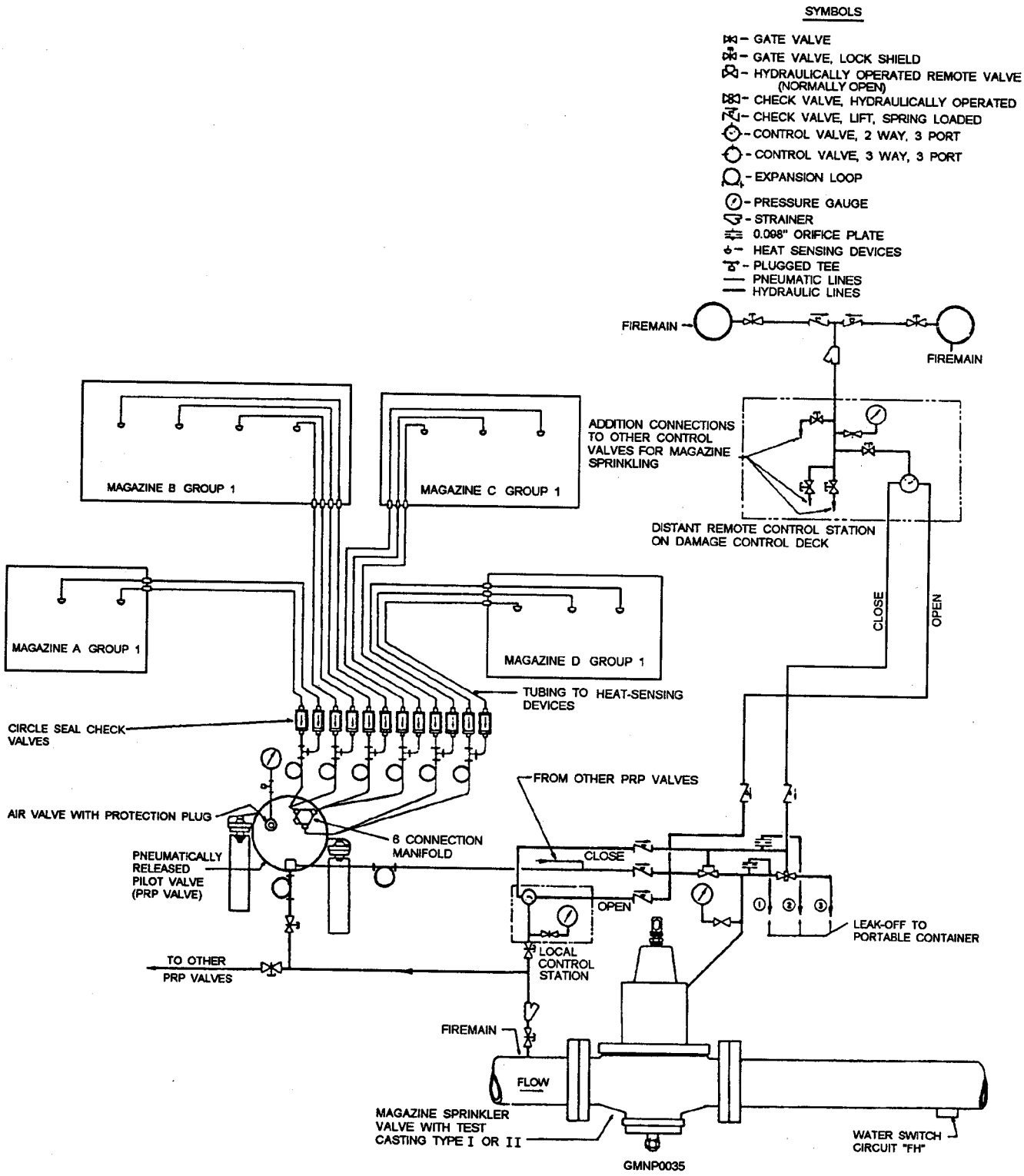

Figure 2-20.—Hydraulic (SW) and thermopneumatic control system for magazine sprinkler valves.

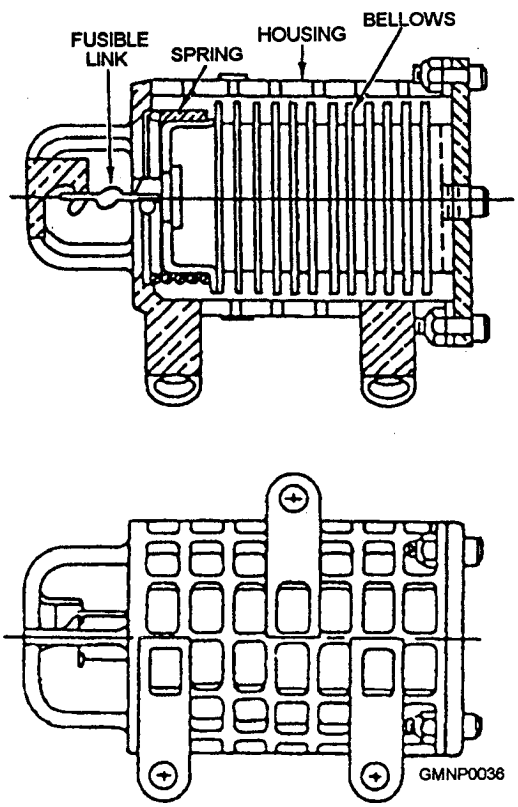

Figure 2-21.—Heat-sensing device (HSD).

Heat-Sensing Device (HSD)

The HSD (fig. 2-21) is a thin-walled, spring-loaded bellows containing air that is designed to create a pressure in response to either a rapid or slow rise in temperature.

As shown in figure 2-21, HSDs consist of a thin-walled, spring-loaded bellows containing air that creates a pneumatic signal when the device is actuated. The spring and bellows are held in the compressed/expanded positions, respectively, by a fusible link that connects the bellows device to the HSD housing. The fusible link is designed to part when the link temperature reaches 160°F (±3°F).

HSDs are mounted on the overhead of the protected space and are connected to the manifold of the PRP valve by individual l/8-inch transmission lines. A vented check valve is installed in each transmission line.

In the event of a fire, resulting in a rapid rise in temperature in the protected space, heat is absorbed by the HSD. The heat is conducted to the air within the bellows, causing it to expand and create a pressure. The pressure is transmitted to the rear of the release diaphragm of the PRP valve, thereby creating the differential pressure necessary to trip that valve.

In the event of a smoldering fire, resulting in a slow rise in temperature in a protected space, the pressure created within the bellows increases too slowly to trip the PRP valve. When the temperature reaches 160°F (±3°F), the fusible link in the end of the collet separates, thereby removing the restraint holding the bellows in place. The bellows then collapses under the tension of the spring. The sudden compression creates a pressure impulse that is transmitted to the rear of the release diaphragm of the PRP valve, thereby creating the differential pressure necessary to trip that valve.

Transmission Lines

The transmission lines that connect the thermopneumatic elements to the PRP are rockbestos or rockhide-covered seamless copper tubing.

Vented Check Valve

The vented check valve (fig. 2-22) is a brass, spring-loaded check valve that is designed to check against a rapid change of air pressure in one direction and to open when air pressure is applied in the other

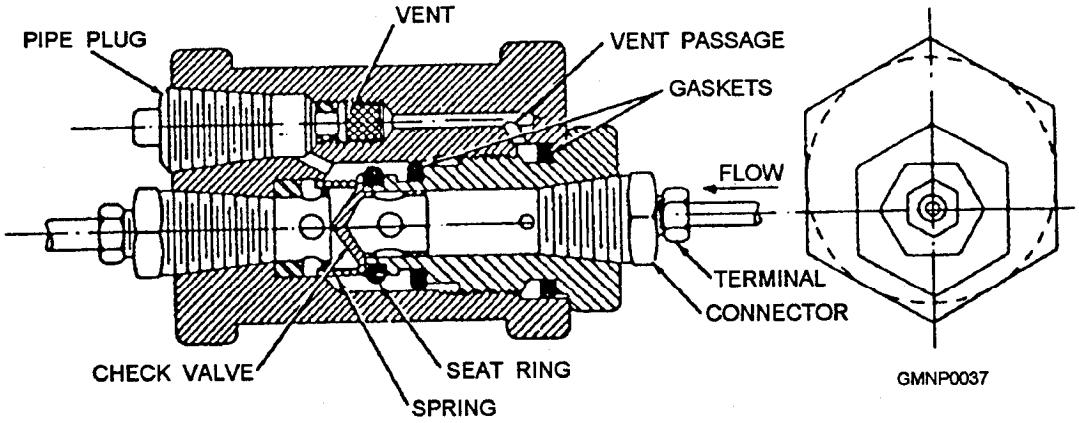

Figure 2-22.—Vented check valve.

direction. One vented check valve is installed in each transmission line (above the PRP and maximum of 12 per PRP) from an HSD with the direction-of-flow arrow pointing toward the PRP. Since the PRP manifold contains only six ports for transmission tubing connection, systems requiring seven or more HSDs will "Tee" together vented check valves, starting with the seventh check valve. The check valves prevent the rapid increase in air pressure created in an individual HSD from pressurizing the entire system. The check valve body contains a vent installed in a bypass around the main valve. The vent permits a slow backflow of air to equalize system pressure in response to normal changes in ambient temperature.

Pneumatically Released Pilot (PRP) Valve

The PRP valve (fig. 2-23) is a normally closed spring-loaded pilot valve that opens automatically to actuate the magazine sprinkler system in response to a pneumatic signal from one or more thermopneumatic elements.

The main components of the PRP valve are the operating mechanism, the compensating vent, and the pilot valve. The operating mechanism and compensating vent are housed in a circular bronze case. The pilot valve is mounted on the front of the case. The pilot valve is installed in a 3/8-inch line that connects the firemain to the sprinkler system hydraulic control system piping. The PRP valve case is provided with shock mounts and brackets for fastening to a bulkhead.

The operating mechanism consists of a spring-loaded operating lever operated by a release diaphragm through a series of linkages and levers. The rear of the release diaphragm is connected to the tubing from the HSDs. The front of the release diaphragm is open to the interior of the PRP valve case. The compensating vent connects the two sides of the diaphragm. The diaphragm moves to trip the release lever in response to either a sudden or gradual increase in pressure transmitted from one or more HSDs. When the PRP valve is set, the operating lever is cocked to hold the valve closed. When the PRP valve is tripped, the operating lever is released to rotate through a clockwise

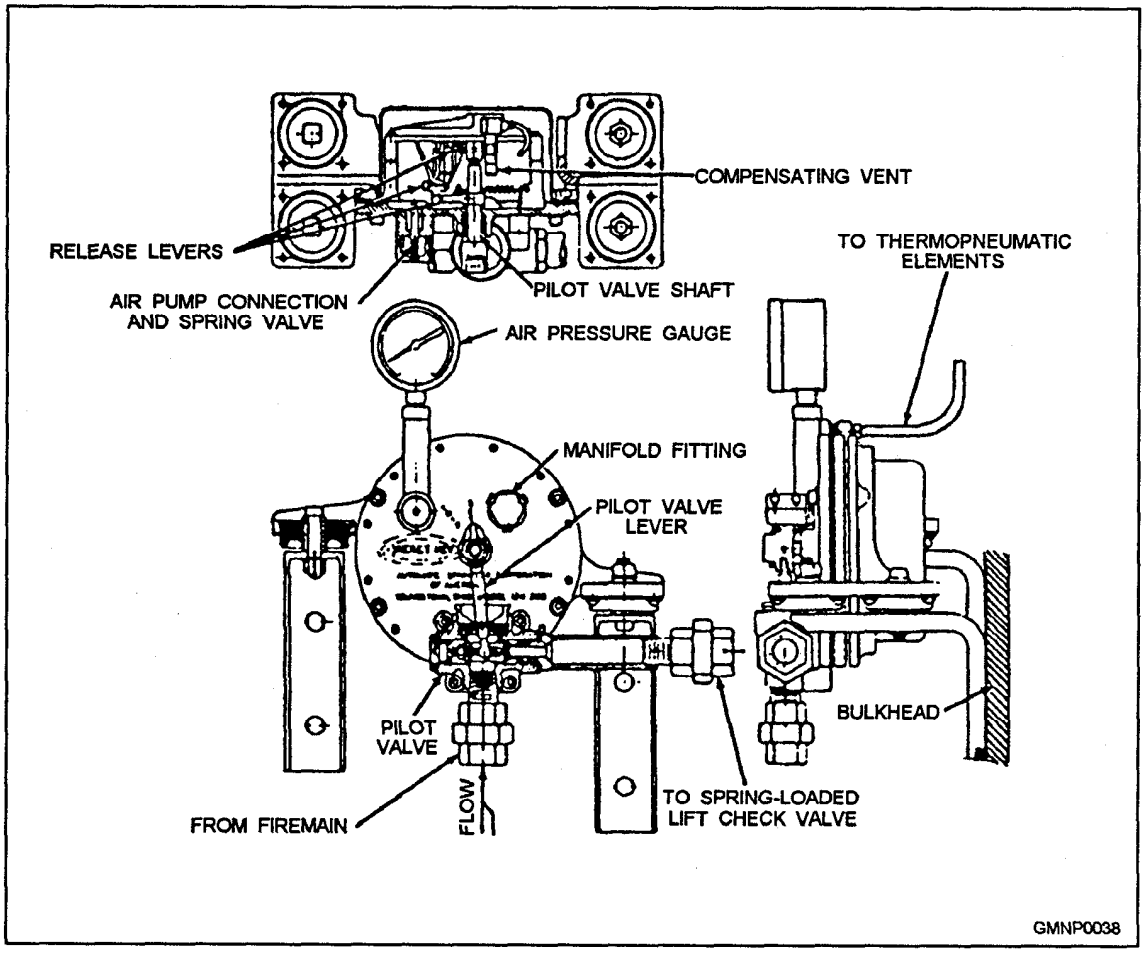

Figure 2-23.—Pneumatically released pilot (PRP) valve.

arc. The angular motion is transmitted to the pilot valve lever by a connecting shaft.

The pilot valve is a cast bronze assembly that houses the valve seat and the seat holder. The end of the pilot valve outlet piping serves as the seat. The seat holder is a Monel cylinder that contains a rubber seat disk bonded to one end and an adjusting screw and locknut on the other end At assembly, the ball end of the pilot valve lever is inserted in the middle of the seat holder between the adjusting screw and the shoulder of the seat disk. An antichatter spring is provided between the ball of the lever and the back of the seat disk.

The pilot valve lever is designed to pivot about a pin fastened to the PRP valve case. When the PRP valve release diaphragm is tripped, the movement of the pilot valve lever causes the seat holder to move away from the seat, thereby permitting seawater to enter the hydraulic control system piping and actuate the sprinkler system.

The PRP valve is equipped with a compensating vent that functions to "leak off" the slight increases or decreases of pressure within the HSDs caused by normal temperature fluctuations in the protected compartment. This leakoff of slow pressure changes equalizes the pressure on both sides of the release diaphragm and prevents inadvertent tripping of the PRP valve. The compensating vent is calibrated and adjusted at the factory. No adjustments should be undertaken by ship's force.

Accordingly, the rate-of-rise circuit is designed to trip the PRP valve and actuate the sprinkler system when sufficient heat is absorbed by the HSDs to create a definite pressure within the circuit over a given period of time. This pressure acts against the rear of the release diaphragm to create the pressure differential necessary to trip the PRP valve. A slower rate of heat absorption will not cause the system to function, as provision is made within the PRP valve to compensate for normal temperature changes in the protected space.

The HSDs are connected to the manifold of the PRP valve. In the event of a rapid rise in temperature, the air within the HSD expands and transmits a pressure to the rear of the PRP valve release diaphragm. In the event of a smoldering fire, a fusible link on the end of the HSD parts when the temperature in the space reaches 160°F, ±3°F When the link parts, a spring-loaded bellows is released. The rapid compression of the bellows transmits a pressure to the rear of the PRP valve release diaphragm. In both instances a differential pressure is created to trip the PRP valve.

A differential pressure of at least 8 ounces psi across the release diaphragm is necessary to trip the PRP valve.

NOTE

The gauge mounted *on the* front of the PRP valve indicates the pressure within the entire system—not the differential pressure. At times the gauge may indicate a positive pressure within the system. This pressure is a normal condition caused by expansion of air within the system as a result of increased ambient temperature. The pressure indicated on the gauge exists on both sides of the PRP valve release diaphragm.

For a complete operating description of all the different magazine sprinkler system configurations, refer to *Magazine Sprinkler Systems,* NAVSEA S9522-AA-HBK-010.

MAGAZINE ALARM SYSTEM

Several types of warning devices or systems are used on board ship. One of *them* is the alarm system activated by the water switch (fig. 2-24) on the dry side of the sprinkler system main (group) control valves. This alarm is designated *FH* and indicates by sound or by light when the main control valve is open or leaking. Another type of alarm is the flooding alarm, designated *FD,* that incorporates a float switch located near the deck. As water accumulates on the deck, the float rises, making a set of contacts and sounding an alarm. It is worth considering that, in the event the sprinkler system is actually activated, both alarms would sound within seconds of each other. Remembering this fact will help

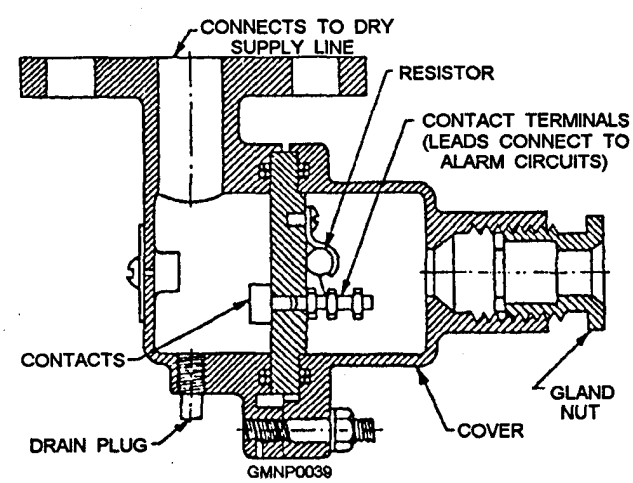

Figure 2-24.—FH alarm sensor.

you react appropriately when you receive notification that an alarm has been triggered.

Another type of alarm system used is actuated by heat, designated *F* alarm. This alarm sounds when the temperature in an ammunition stowage area rises to 105°F. With this warning, the temperature can be reduced before sprinkling becomes necessary,

AMMUNITION HANDLING AND SAFETY

LEARNING OBJECTIVES Identify the equipment and requirements for the safe handling and stowage of Navy ammunition. Recall the Qual/Cart program and its associated training.

The safe handling and stowage of Navy ammunition requires a high degree of knowledge and skill on the part of all involved. You will be expected to operate heavy equipment and configure ammunition for underway replenishment. You will also be responsible for training and supervising individuals serving as members of ammunition-handling work parties. In this section we will discuss the loading/offloading plan and describe some of the common handling equipment and ammunition-handling training programs. We will also identify some ammunition safety requirement publications that you should use for further study.

Before you handle any ordnance, a plan must be formulated and implemented to ensure maximum efficiency and, most importantly, the safety of the evolution. Normally, the basic guidelines for various handling operations may be found in the unit *Standard Organization and Regulation Manual* (SORM). However, the individual plan for each evolution should be issued as a weapons (or combat systems) department notice or instruction based on the type of operation to be performed

ARRIVAL CONFERENCE

Before or upon arrival of a Navy ship at an explosives pier for loading or offloading of ammunition or other hazardous material, a conference should be held to coordinate safety procedures on the pier and on board ship. The commanding officer or authorized representative of the ammunition activity and the commanding officer of the ship, with other designated ships personnel, should attend the conference.

LOADING/OFFLOADING PLAN

Before loading or offloading any ammunition (other than the small amounts which will be handled by qualified weapons personnel), you should outline and promulgate a workable ammunition-handling plan in the form of a weapons department notice. The ships organization manual may include a standard loading plan. If not, you can probably find a previously used plan in your weapons department files of instructions and notices. This plan can be used as a guideline but will very likely have to be altered to meet present circumstances.

Your loading plan should include the following information

1. A sketch or drawing showing the positions of all stations where ammunition will be taken aboard; and, if the ship is to be at an anchorage, the positions that all barges, camels, cranes, and associated equipment will take alongside the ship.

2. The types and amounts of ammunition to be taken aboard at each station.

3. A clear description of the route that each type of ammunition will take from the onload station to the magazine.

4. A list of personnel assigned to each station, providing for rotation, chow relief, and change of station upon completion of comparatively short assignments.

5. A list of the ammunition-handling equipment to be supplied at each station by the ship. This equipment should be thoroughly inspected before the operation.

6. A list of the ammunition-handling equipment to be supplied by the ammunition or other facility, and where the equipment will be required. This list will include such equipment as cranes, conveyor belts, bomb trucks, and electric forklifts.

7. A definition of smoking areas (if any).

8. A list of all pertinent safety precautions.

9. A list of the types and amounts of ammunition to be loaded into each separate magazine. (A loading plan for each magazine should be given to the officer or petty officer in charge of its stowing.)

Depending on the circumstances, you may find other important items to add to your loading plan. An offloading plan includes much of the same information as the loading plan, except, of course, that routings and participants might be different.

All persons in a supervisory capacity should receive a copy of this plan. If at all possible, supervising petty officers should be assigned to stations where personnel of their own division are working. This assignment will prove especially helpful should it become necessary to shift large groups to another station during the operation.

INSPECTION BEFORE ACCEPTING

Before acceptance of a shipment of ammunition and explosives, a ships representative, in company with an ordnance facility representative (the supervisor in case of a loaded lighter), should inspect the seals of the vehicle and check the general condition of the shipment. Before loading a common carrier, it must be carefully inspected to ensure that all requirements of the DOD and the DOT or USCG have been met. It is imperative that the following checks be accomplished:

1. Ensure that the material is properly boxed in correct shipping containers. Ensure that there are no leaky containers, and that none are broken or so weak as to break during transportation. In those cases where leaky containers or other damaged materials are being turned into an ammunition activity (offloaded), ensure that they are plainly marked and segregated from other materials.

2. Ensure that the total quantity shipped and/or received is in agreement with the invoice (if feasible at this point).

3. Ensure that the material is properly stowed (or stacked and braced in the vehicle to prevent damage to containers or contents) according to applicable regulations.

The BRAVO flag (solid red flag) should be prominently displayed during daylight (a red light at night) by any vessel or barge transporting, onloading, and offloading explosives or ammunition.

OPERATION AT NIGHT

Live ammunition and explosives should not be loaded on or discharged from a ship or lighter at night except in an emergency or when required by the vessels sailing schedule, or as authorized by NAVSEA-SYSCOM. Piers should be adequately lighted and equipped with fire protection and safety equipment. If loading or unloading is not completed during the day, proper precautions should be taken to guard and protect against fire, and a sufficient crew should be on hand to adequately cope with emergencies that might arise. If night operations are required, only carefully placed, approved electric lights, portable lanterns, or flashlights should be used inside the ship or lighter, or in the adjacent areas.

Lighting equipment should meet the standards of the National Electric Code as follows:

1. Extension lights should be fitted with exterior globes and stout guards to protect the bulbs.

2. Wire leading to the lights should be sound and heavily insulated and show no evidence of being likely to short-circuit.

3. Extension lights should be suspended in such a manner that no strain is carried by the light cable; they are not to be suspended by the cable.

4. Extension lights should be so guarded and protected that neither the light nor the light cable will be in contact with any metal part of the ship, lighter, vehicle, handling equipment, or with any of the ammunition, explosives, or their containers.

5. Extension lights should have an outside power source not connected in any way to the lighter, railroad car, truck, or vehicle.

HANDLING EQUIPMENT

Afloat and ashore, Gunners' Mates handle, store, and transport all types of ammunition and ammunition components. These actions involve the use of many different types of handling equipment. In this section we will introduce you to industrial materials-handling equipment (MHE) and some of the slings currently in use.

Industrial Materials-Handling Equipment (MHE)

Many sea and shore billets now require Gunners' Mates to perform as industrial MHE operators-most commonly as forklift truck drivers. The forklift truck is an important tool for moving large quantities of pelletized ammunition. Operators of self-propelled forklift trucks are required to complete a physical examination, mental test, and training before being certified to operate the equipment. Figure 2-25 shows the front and back of the operator's identification card. Certification is valid for 1 year.

Forklift trucks are assigned standard alphabetical type designations to identify their fire and explosive safety features and power source. Table 2-2 lists the fire and safety designations for MHE.

Standard Form 46
Revised Jan. 1977
USCSC
FPM Chapter 930

U.S. Government Motor Vehicle Operator's Identification Card

Card No.			
Name of Operator		Sex	Date Issued
Height	Weight	Date of Birth	Social Security No.	Date Expires
Color of Hair	Color of Eyes	NOT TRANSFERABLE Card must be carried at all times when operating Government vehicles.	Signature of Operator *(Not valid until signed)*
Name and Location of Issuing Unit		Signature and Title of Issuing Official	

The holder of this card is qualified to operate U.S. Government vehicles and/or equipment specified, subject to the restrictions set forth on the reverse of this card.

46-105

PRIVACY ACT NOTICE

Authority: This information is provided pursuant to Public Law 93-579 (Privacy Act of 1974), December 31, 1974, for individuals being issued Standard Form 46, U.S. Government Motor Vehicles Operator's Identification Card, U.S. Code, Title 5, section 301.

Purposes and Uses: The purpose of SF46 is to identify Federal employees who have been authorized by their agencies to operate Government-owned motor vehicles.

Effects of Nondisclosure: The effect of nondisclosure of the information required on the SF 46 is that an individual will not be authorized to drive a Federal motor vehicle. Failure to disclose accurate information that results in a negative reply from the National Drivers Register Service can result in revocation of an issued operator's identification card. The disclosure of this information is mandatory when an employee's job requires driving a Federal motor vehicle and is voluntary otherwise.

Information Regarding Disclosure of Your Social Security Number Under Public Law 93-579 Section 7 (b): Disclosure by you of your Social Security Number (SSN) is

(continued on reverse)

FRONT

Restrictions

QUALIFIED TO OPERATE

Type Vehicle and/or Equipment	Capacity	Qualifying Official

OTHER RECORDS *(Optional)*

* GPO: 1978 O - 261-647 (3525)

mandatory to obtain the U.S. Government Motor Vehicle Operator's Identification Card. Solicitation of the SSN by the United States Civil Service Commission is authorized under provisions of Executive Order 9397, dated November 22, 1943. The SSN is used as an identifier throughout your Federal career from the time of application through retirement.

The SSN will be used by the National Drivers Register Service in conducting a routine check of your driving record. The SSN also will be used by the Civil Service Commission and other Federal agencies in connection with lawful requests for information about you from former employers, educational institutions, financial, law enforcement, or other organizations. The information gathered through the use of the number will be used only as necessary in personnel administration processes carried out in accordance with established regulations and published notices of systems of records. The SSN also will be used for the selection of persons to be included in statistical studies of personnel management matters. The use of the SSN is made necessary because of the large number of present and former Federal employees and applicants who have identitiesnames and birth dates, and whose identities can only be distinguished by the SSN.

GMN0040

BACK

Figure 2-25.—Operator's identification card.

Table 2-2.—MHE Fire and Explosion Safety Designations

1. Type D – Diesel-powered, minimum acceptable safeguards against fire hazards (because of its limited use for ordnance handling, this type of truck is not currently procured).
2. Type DS – Diesel-powered, additional safeguards to exhaust, fuel, and electrical systems.
3. Type E – Electrically powered, minimum acceptable safeguards against igniting fire or explosion (because of its limited use for ordnance handling, this type of truck is not normally available at ordnance-handling activities).
4. Type EE – Electrically powered, all the safeguards to type E plus electric motor and all other electric equipment completely enclosed. Generally referred to as spark enclosed.
5. Type EX for Class I, Group D Hazards – Electrically powered, all electrical fixtures and equipment constructed and assembled in such a manner that it may be used in certain atmospheres containing flammable vapors. Generally referred to as explosion proof.
6. Type G – Gasoline-powered, minimum acceptable safeguards against igniting fire or explosion.
7. Type GS – Gasoline-powered, additional safeguards to exhaust, fuel, and electrical systems over type G.
8. Type H – Hand-powered.
9. Type HS – Hand-powered, nonsparking wheels.

The most common forklift truck is the standard forklift truck, type EE, code 1370 (fig. 2-26). This forklift is currently in use aboard ships and at shore activities. At shore activities this truck is used inside magazines and buildings; a comparable diesel-powered truck is used in open air operations.

For a more detailed description of forklift trucks and other MHE, refer to *Handling Ammunition, Explosives, and Hazardous Materials with Industrial Materials-Handling Equipment (MHE),* NAVSEA OP-4098.

Safety Precautions for Industrial Materials-Handling Equipment (MHE)

The safety precautions and instructions pertaining to the safe operation and use of ammunition- and explosives-handling equipment prescribed in this section, NAVSEAINST 5100.19, 0P 4, OP 5, OP 1014, OP 3347, and the applicable safety manual for particular weapons should be strictly observed by all naval activities, afloat and ashore.

Forklift trucks, pallet trucks, platform trucks, crane trucks, and warehouse tractors and trailers (industrial MHE) are used in various ammunition- and explosives-handling operations. This equipment is designed to save time and labor. Improper and careless operation or use of this equipment, however, causes accidents, which may result in fatal or serious injury. It may also cause damage to valuable supplies and equipment, resulting in a reduction of the efficiency of the handling operation. Therefore, it is imperative that the safety precautions and instructions prescribed for all kinds of industrial MHE be followed to the letter.

CARGO NETS.— When ammunition is being embarked or discharged from a ship in port, a cargo net should be rigged between the ship and the dock, or between the ship and the ammunition lighter, to catch any ammunition that may be dropped.

Cargo nets should not be used for transferring explosives and ammunition except to enclose a pallet, skip board, or tray. In hoisting or lowering containers with cargo nets, a rigid wooden platform should be fitted in the net.

MATS.— The cargo mat (fig. 2-27) is a closely woven mat having no openings or mesh. The mat is constructed of a 3-inch coil, which is a coconut husk fiber rope. The mats are available in two sizes—6 feet square and 4 feet square. The mats are designed with looped eyes on each comer for lifting.

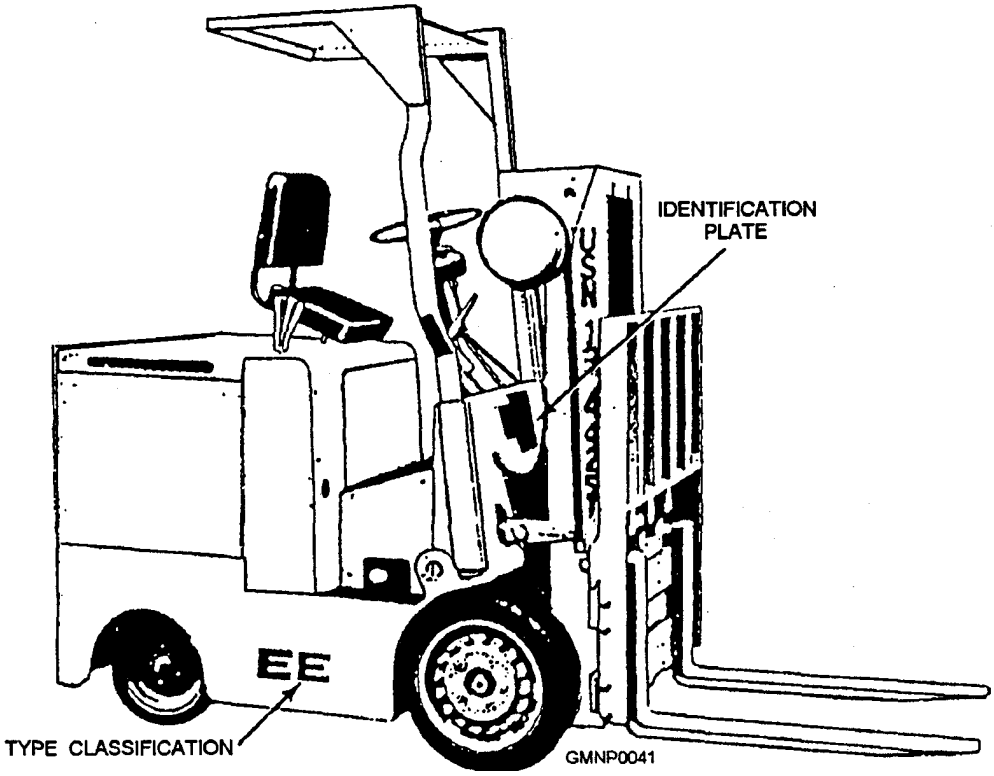

Figure 2-26.—Standard forklift truck, type EE, code 1370.

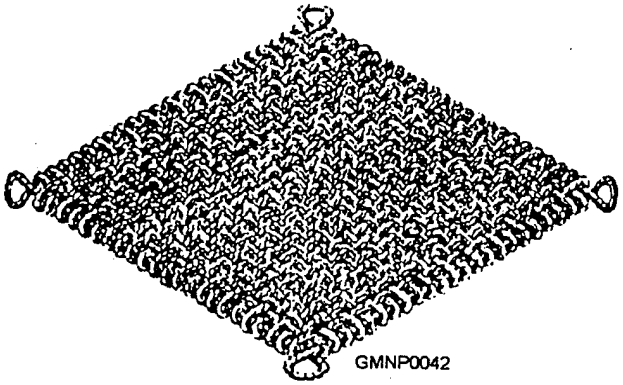

Figure 2-27.—Cargo mat.

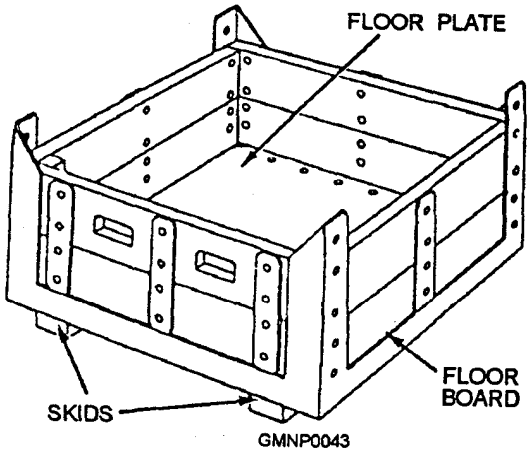

Figure 2-28.—Skip box.

The mat is used aboard ship and at shore stations. It is used also inside cargo nets or skip boxes for the protection of the cargo. It is used to cushion the landing of a draft or material that is transferred on a slide.

SKIP BOX.— The cargo-handling box (skip box) (fig. 2-28) is made of wood except for the iron corner angles and stiffeners. This type of handling device is ideal for handling ammunition that is light enough to be handled by hand. The cargo-handling skip box is also used ashore and afloat. The heavy timber skids underneath permit the use of forklift trucks or slings to handle the box.

PALLET ADAPTERS.— The Mk 11 Mod 1 top spacer used with the Mk 11 Mod 1 bottom spacer (fig. 2-29) makes a complete pallet adapter for handling rocket heads and projectiles. The top and bottom spacers are fabricated of steel wire. The bottom spacer has 12 recesses, each of which holds the base of a projectile. The top spacer has 12 equally spaced holders to receive and hold the noses of the projectiles in a vertical position. The top spacer is reversible; one side is used for rocket heads—the other for projectiles. There is a lifting link on each side of the top spacer.

The Mk 11 Mod 1 pallet adapter is used ashore and afloat and will handle a unit load of 12 5"/54 projectiles. It will also handle 12 5" rocket heads. Flat steel strapping should be used to secure the load on a 40-by 48-inch pallet.

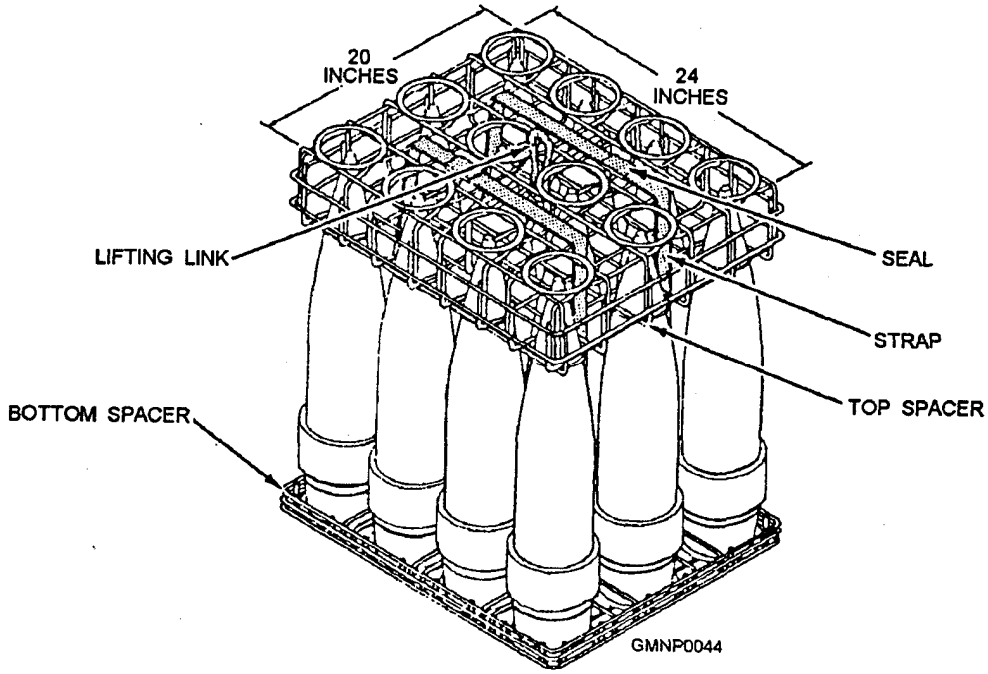

Figure 2-29.—Mk 11 Mod 1 pallet adapter.

The Mk 16 Mod 0 pallet adapter (fig. 2-30) is a complete pallet adapter consisting of a top frame, rear frame, and front frame. It is used aboard ship and at shore stations and is capable of handling a capacity load of 39 5"/54 cartridge tanks. To secure the load on a pallet, you should use flat steel strapping.

Special Handling Regulations for Bulk Explosives and Gun Ammunition

Extreme care must be taken in handling black powder, smokeless powder, or other bulk explosives since they are highly flammable and sensitive to friction, shock, sparks, heat, and static electricity. Only nonsparking tools should be used to open containers of these explosives. The special handling instructions prescribed in the paragraphs that follow should be observed when handling gun ammunition.

PROJECTILES.— Load projectiles—whether packed or unpacked, grommeted, crated, or palletized-should be carefully handled and stowed to avoid detonation or damage to rotating bands, bourrelets, points, caps, windshields, covers, fuze threads, painting, and identification markings. They should be handled by trucks, carriers, and slings. When rolling is the only available means of moving, you should protect the projectile bodies, windshields, and copper rotation bands to guard against arming the fuze assembled in the projectile.

Projectiles should not be rolled on the ground, concrete floors, or steel decks, but may be rolled on dunnage boards not less than 1 inch thick.

When a loaded and fuzed projectile is dropped 5 feet or more, it should be set aside, tagged, and turned in to an ammunition activity at the first opprtunity—or dumped in deep water—at the discretion of the commanding officer.

Projectile-handling slings that support part of the weight of the projectile on the cap or windshield should not be used on armor-piercing projectiles or on common projectiles fitted with windshields.

Never slide projectiles down a slide without using a restraining line. The base of the projectile should be toward the lower end of the slide.

Detonators, fuzes, booster cavities, and faze threads should be kept free of all foreign matter except for alight film of specified lubricating preservatives.

POWDER TANKS AND CARTRIDGE TANKS.— Powdertanks containing bag charges should not be rolled or dropped. These tanks should be carried by hand, lift truck, or hand truck being careful to prevent internal movement and possible ignition of the charge within the tank by static electricity. When lifting and moving such tanked charges, you should hold the bottom of the tank lower than the top at all times.

Tanks containing fixed cartridges or separate loaded propelling charges should also be handled carefully to prevent misalignment damage to the round or destruction of close tolerance dimensions. They maybe handled with roller conveyors, chutes, or trucks as long as precautions against shocks are observed. Care should be exercised to avoid denting the thin-walled body, opening the body seams, or loosening the top or bottom rings, thereby permitting exposure of the powder to the atmosphere.

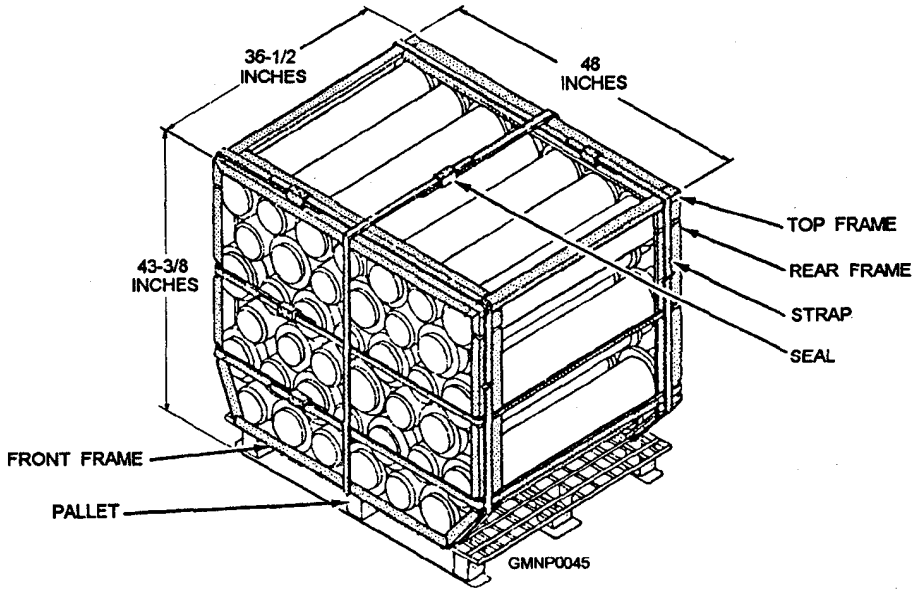

Figure 2-30.—Mk 16 Mod 0 pallet adapter.

When a tank containing a fixed cartridge is dropped a distance of 5 feet or more, the tank and its contents should be set aside, carefully marked, and turned in to an ammunition activity at the first opportunity-or dumped in deep water—at the discretion of the commanding officer.

EXPLOSIVE COMPONENTS.— Fuzes, boosters, and detonators are loaded with explosives which are sensitive to shock, heat, and friction and must be handled with care at all times.

Every effort should be made to keep component containers sealed airtight when so packed and to limit their exposure to the atmosphere.

Containers of explosive blasting caps and fuzes should not be left uncovered and must be in the custody of authorized personnel at all time.

Wooden containers containing explosive components should be opened carefully using only approved spark-resistant tools. A wire, nail, or sharp instrument should NEVER be used to pry open the container.

SMALL ARMS.— It cannot be emphasized too strongly that inadvertent and improper use of small arms and small-arms ammunition has resulted in numerous casualties. Invariably, the basic cause of each casualty is carelessness.

Cartridge cases should not be polished Corrosion, moisture, and dirt, however, should be wiped off. The ammunition should be protected from shock, which might dent it or fire the primer.

Ammunition should not be broken down except to make necessary examinations or when preparing ammunition for target practice or action. Small-arms ammunition should not be opened until the ammunition is required for use. No reworking, overhaul, or modifying of any live-loaded ammunition or component is permitted on board ship.

SLINGS.— Bulk ammunition is most often moved in palletized loads. Slings are used to facilitate the movement of these standard-size loads by helicopter and underway replenishment. Aboard ship you will find a wide variety of slings for moving ammunition. The slings most commonly used for moving gun ammunition are the Mks 85, 86, 87, and 100. All of these are size variations of the same type of adjustable sling (fig. 2-3 1). These slings are adjustable for

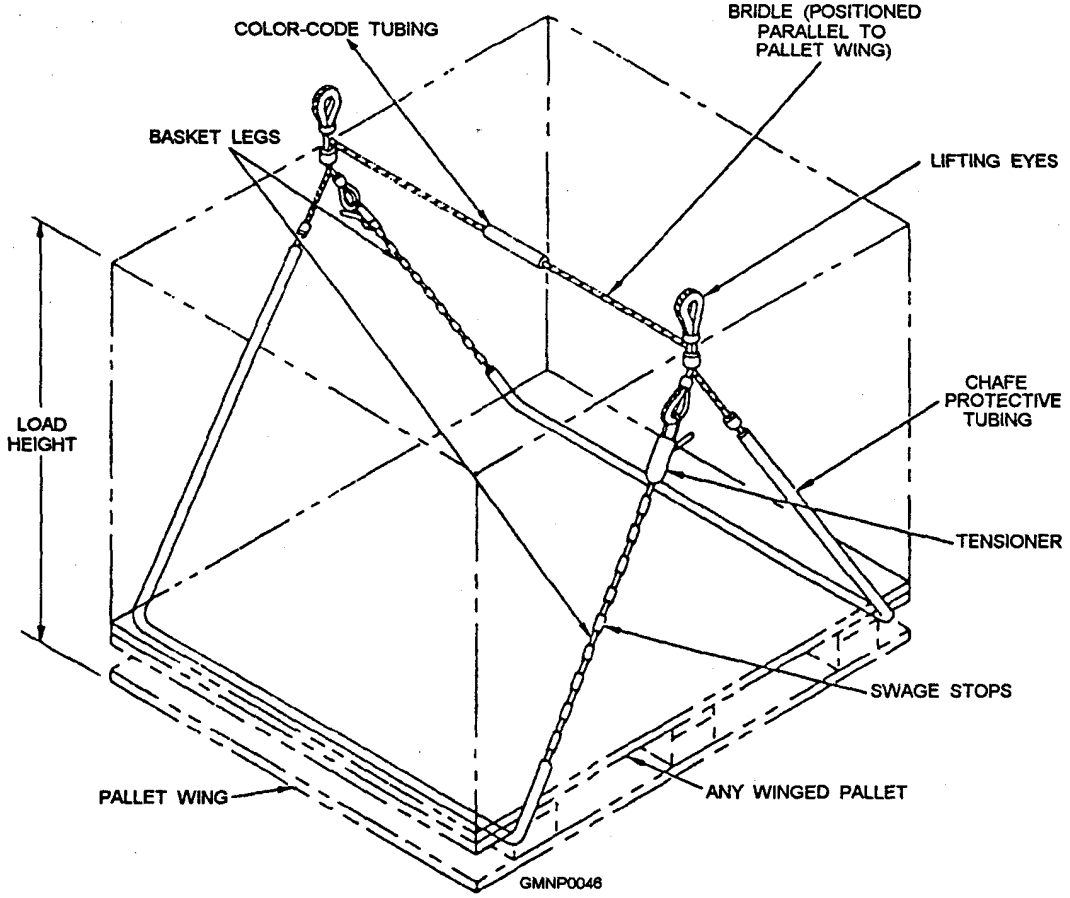

Figure 2-31.—Adjustable pallet sling.

Table 2-3.—Certification Level Qualification Standards

CERTIFICATION LEVEL	QUALIFICATION STANDARD
IN TRAINING (IT)	1. Incumbent is required, by nature of duty, to perform work tasks with explosive devices while under direct supervision of a certified team leader (TL) or individual (I). 2 Incumbent is receiving training on newly introduced explosive devices for which inert training devices are not available. 3. Incumbent shall not work with explosives unless supervised by TL or I. 4. This level of certification is temporary until such time full qualification justifies certification at a higher level, for example, TM, or I.
TEAM MEMBER (TM)	BASIC QUALIFICATION. Personnel are aware of basic safety precautions relative to the work task and explosive devices concerned, have received formal and/or on-the-job training, and have been recommended by their immediate supervisor. May not work with ordnance unless supervised by TL or I. NOTE: TM-certified personnel will perform in team concept only under supervision of a certified TL.
INDIVIDUAL (I)	1. Same as for team member (TM) above. 2. Has sufficient knowledge and has demonstrated the proficiency of the work task alone, or trains others in safe and reliable operations. 3. Capable of interpreting the requirements, applicable checklists, SOP, and assembly/operating manuals.
TEAM LEADER (TL)	1. Same as for TM and I above. 2. Has sufficient knowledge and has demonstrated the proficiency to direct the performance or training of others, in safe and reliable operations.
QUALITY ASSURANCE (QA)	1. Same as I or TL above. 2. Must have detailed knowledge and ability to train others in applicable explosive device/systems inspection criteria and be able to decide that the necessary assembly or installation procedures have been completed per applicable directives. NOTE: Only TM, I, TL, and QA are interrelated. Certification at the QA level automatically assumes the individual has all knowledge and skill levels required of the TM, I, and TL member.
SAFETY OBSERVER (SO)	1. Must have sufficient knowledge of safety procedures and the functioning of safety devices to deicde subsequent reaction when safety procedures or devices are not properly used. 2. Certification at the SO level does not require prior certification at any other level. NOTE: The certification level is not restricted to the most senior within a unit. A junior who possesses the foregoing standards and demonstrated maturity may likewise be certified.

different heights of pallets. The different versions are easily identified by the color-coded tubing attached to the cross bridal.

For more information on slings and other weapons-handling equipment, refer to *Approved Handling Equipment for Weapons and Explosives,* NAVSEA OP-2173, volumes 1 and 2.

EXPLOSIVES-HANDLING PERSONNEL QUALIFICATION AND CERTIFICATION (QUAL/CERT) PROGRAM

The requirements of the Explosives-Handling Personnel Qualification and Certification (Qual/Cert) program are defined in COMNAVSURFLANTINST 8023.4/COMNAVSURFPACINST 8023.5. The program consists of a series of certification levels, definitions of work tasks, and categories or families of explosive devices. Anyone who handles ammunition or operates ammunition-handling equipment must be certified under this program. Remember, this certification also pertains to gun mount and missile launcher operators.

An individual is trained and certified to perform specific work tasks on individual families of ordnance. Refer to tables 2-3, 2-4, and 2-5 for definitions of certification levels, work tasks, and a sample of families of explosive devices.

The key to the Qual/Cert program is documented training. In the past, ammunition handlers were arbitrarily certified without recorded training to substantiate the certification awarded. This method of certification is no longer the case. Your certification is worthless without documented training in your training record. Figure 2-32 shows a sample certification sheet for an individual certified to handle and stow small-arms ammunition, gun projectiles, and cartridge-case-type propelling charges at the team member level.

The Qual/Cert board is appointed in writing by each unit's commanding officer. Each board member, except the chairman, should be certified at or above the level to which he or she is allowed to sign on the certification sheet.

AMMUNITION SAFETY

The utmost care and prudence must be exercised in supervising the handling, inspecting, preparing, assembling, and transporting of all ammunition. People tend to become careless and indifferent when continually engaged in routine work and, as long as nothing occurs, are naturally inclined to drift gradually into neglecting the necessary safety precautions. A lax and negligent attitude cannot be tolerated when handling explosives. Nothing but constant vigilance on the part of everyone involved will ensure the steadfast observance of the rules and regulations that experience has taught to be necessary.

It is not practical to list all the safety requirements pertaining to ammunition handling in this manual. As you proceed through the Qual/Cert program, you will receive training on each safety requirement and its application in detail. Pay particular attention to the publications and instructions identified throughout this chapter that contain the bulk of ammunition-handling and safety requirements.

Safety is everyone's responsibility. An awareness of the potential danger, a knowledge of how this danger can be avoided, and a constant vigilance are required to prevent accidents when working with explosives. If a thorough understanding of the precautions is developed, unsafe conditions can be recognized and corrected. Hopefully, it will prepare you to act instinctively when the unexpected occurs. It is your responsibility as a Gunner's Mate to exhibit an expert knowledge of ammunition safety requirements. Safety precautions pertaining to the handling of and working with explosives are contained in *Ammunition Afloat,* OP *4; Ammunition Ashore,* OP 5; *Ordnance Safety Precautions, Their Origin and Necessity,* OP 1014; and *United States Ordnance Safety Precautions,* OP 3347. Read and reread these publications.

Safety precautions, rules, and regulations for handling explosives should be made the subject of frequent training and review. The necessity for strict compliance with these precautions should be firmly fixed in the minds and habits of everyone involved in handling explosives. You need to be able to react positively in an emergency.

Attention to Safety

Your attention is particularly invited to the fact that in the early stages of the use of explosives, experience was gained at a great price, not only in dollars, but in human lives. No relaxation should be tolerated. A relaxed attitude tends to create the impression that a close, deliberate, and detailed attention to safety rules is arbitrary. Nowhere is attention to safety more important than in working with explosives.

Table 2-4.—Work Task Code Definitions

1. Stowage — The physical act of stowing explosive devices in designated and approved magazines and ready service lockers.
2. Handling — The physical act of moving explosive devices manually or with powered equipment within the confines of the ship or within an area authorized for handling ashore.
3. Assembly/Disassembly — Physically mating/unmating explosive device components to form a complete round including torpedo banding. This work task code is used only when assembly/disassembly of the explosive device is authorized at the fleet level.
4. Load/Download — The physical act of installing/removing explosive devices including cartridge-actuated devices into/from the vehicle from which initiation is/was intended, for example, launchers, projectors, racks, and gun barrels.
5. Arm/De-arm — The physical act rendering explosive devices from a safe condition to ready-for-initiation or returning explosive devices from the ready-for-initiation state to a safe condition.
6. Explosive Driver — An individual who operates self-propelled material handling equipment to transport explosive devices either ashore or afloat. Must meet all requirements of NAVSEA OP 4098 (and COMNAVSURFLANTINST 9093.3 for NAVSURFLANT activities) as a qualification standard before certification.
7. Magazine Inspection — Capability of detecting improperly secured stowage, unsatisfactory packaging, unusual fumes or odors and any other abnormal conditions as defined in NAVSEA OP 4/NAVSEA OP 5 and appropriate maintenance requirement cards (MRC) in explosive devices stowage spaces, magazines, and lockers.
8. Missile System Cycling/Maintenance — Physical act of conducting cyclic operational tests, troubleshooting, repair, and performance of periodic maintenance of GMLS.
9. Gun System Cycling/Maintenance — Physical act of conducting cyclic operational tests, troubleshooting, repair, and performance of periodic maintenance of gun systems.
10. Torpedo System Cycling/Maintenance — Physical act of conducting cyclic operational tests, troubleshooting, repair, and performance of periodic maintenance of torpedo systems.
11. Equipment Operator — An individual who operates non-mobile powered handling equipment (hoists, winches, cranes, elevators, conveyors/transporters, and so on) for handling explosive devices.
12. Testing — The physical act of conducting tests on explosive/firing devices, for example, AIM-9 umbilical tests, continuity tests on SUU-25/44 flare dispensers and LAU 61/68/10 rocket launchers.
13. Sprinkler System — The physical act of maintaining troubleshooting, testing, flushing, and operating shipboard sprinkler systems (wet or dry as applicable).

Table 2-5.—Families of Explosive Devices (partial list)

1. Gun ammunition
   a. Propelling charges
      (1) Bag charges
      (2) Cartridge cases
   b. Projectiles (separate loading)
   c. Fixed ammunition (through 76-mm)
   d. Fixed ammunition (3" and above)
   e. Saluting charges
   f. Small arms ammunition
2. Rockets
   a. CHAFROC
   b. RBOC/SRBOC
   c. Warhead, 2.75"
   d. Warhead, 5.0"
   e. Fuzes, nose
   f. 2.75" motors (Mk 4/Mk 40/Mk 66)
   g. 5.0" motors launcher (Mk 71/Mk 72)
   h. 5.0" rocket launcher (LAU-10)
   i. 2.75" rocket launcher (LAU 61B/A and LAU 68C/A)
   j. 2.75" rocket launcher (LAU 61C/A and LAU 68D/A)
   k. Smokey Sam Simulator rocket and igniter

CERTIFICATION RECORD
SURFGEN 8023/1

RECORD OF CERTIFICATION

15 February 1988
COMNAVSURFLANTINST 8023.4E
COMNAVSURFPACINST 8023.5A

SHIP OR STATION USS CLAYTON (DDG-99)

CERTIFICATION LEVELS		WORK TASK CODES	
IT	IN TRAINING	1. STOWAGE	8. MISSILE SYSTEM CYCLING/MAINT
TM	TEAM MEMBER	2. HANDLING	9. GUN SYSTEM CYCLING/MAINT
I	INDIVIDUAL	3. ASSEMBLY/DISASSEMBLY	10. TORPEDO SYSTEM CYCLING/MAINT
TL	TEAM LEADER	4. LOAD/DOWNLOAD	11. EQUIPMENT OPERATOR
QA	QUALITY ASSURANCE	5. ARM/DEARM	12. TESTING
SO	SAFETY OBSERVER	6. EXPLOSIVE DRIVER	13. SPRINKLER SYSTEM TEST
		7. MAGAZINE INSPECTION	14. SPRINKLER INSPECTOR

EXPLOSIVE DEVICE	CERT. LEVEL/ WORK TASK	INDIVIDUAL SIGNATURE	CERT. BOARD OBSERVER	BOARD CHAIRMAN	VALIDATION DATE
SMALL ARMS	TM/1,2	J.R. Frost GMGSN	Gmc Doe	CDR W.T. DOOR	30FEB90
PROJECTILES	TM/1,2	J.R. Frost GMGSN	Gmc Doe	CDR W.T. DOOR	30FEB90
PROP CHG, CART	CASE TM/1,2	J.R. Frost GMGSN	Gmc Doe	CDR W.T. DOOR	30FEB90

NOTE: All corrections must be lined out and initialed by the individual and the board chairman and a new line entry incorporated.

RECERTIFICATION ONLY

INDIVIDUAL BEING RECERTIFIED (Signature and Date)	BOARD CHAIRMAN (Signature and Date)

NAME JACK R. FROST | GRADE GMGSN | BRANCH/CLASS USN

NOTE: 1. Items not required for recertification shall be lined out and initialed by the individual and board chairman.

2. Certifications have been reviewed and recertified as per dates and signature indicated and are effective for twelve months.

GMNP0047

Figure 2-32.—sample certification sheet.

Working Parties

Ammunition-handling working party personnel are not required to be certified under the Qual/Cert program. *Explosives-Handling Personnel Qualification and Certification (Qual/Cert) Program,* COMNAVSURFLANTINST 8023.4/COMNAVSURFPACINST 8023.5, requires working party personnel to receive training and a safety brief before each handling evolution and to be closely supervised by certified personnel.

ELECTROMAGNETIC RADIATION HAZARD

Some ordnance, such as rocket ammunition, maybe susceptible to ignition by electromagnetic radiation (from such sources as radar or radio transmitters). This condition is called Hazards of Electromagnetic Radiation to Ordnance (HERO). Information regarding the protection of ordnance material from radiation hazards is contained in NAVSEA OP 3565/NAVAIR 16-1-529/NAVELEX 0967-LP-624-6010.

QUANTITY-DISTANCE (Q-D)

Quantity-Distance (Q-D) is the area between two or more explosive-loaded ships, magazines, piers, facilities, and so forth, figured into a safe handling zone. This Q-D relationship is such that if one ship with mass-detonating explosives were to explode, damage to the surrounding area would be minimized by its distance from other local units or facilities. This Q-D area is determined by the amount of explosive material contained by the units or facilities involved. The amount of explosives is computed in pounds. This weight value is called Net Equivalent Explosive Weight (NEEW). NEEW is the weight of the actual explosive content in an ordnance unit. The formulas for computing NEEW are contained in NAVSEA OP 5. An illustration of a typical application of quantity-distance requirements for inport ammunition handling is shown in Figure 2-33. The basic purpose of showing this illustration here is to give you an idea of the magnitude of computations involved in a Q-D problem. The columns and tables referred to in this figure are located

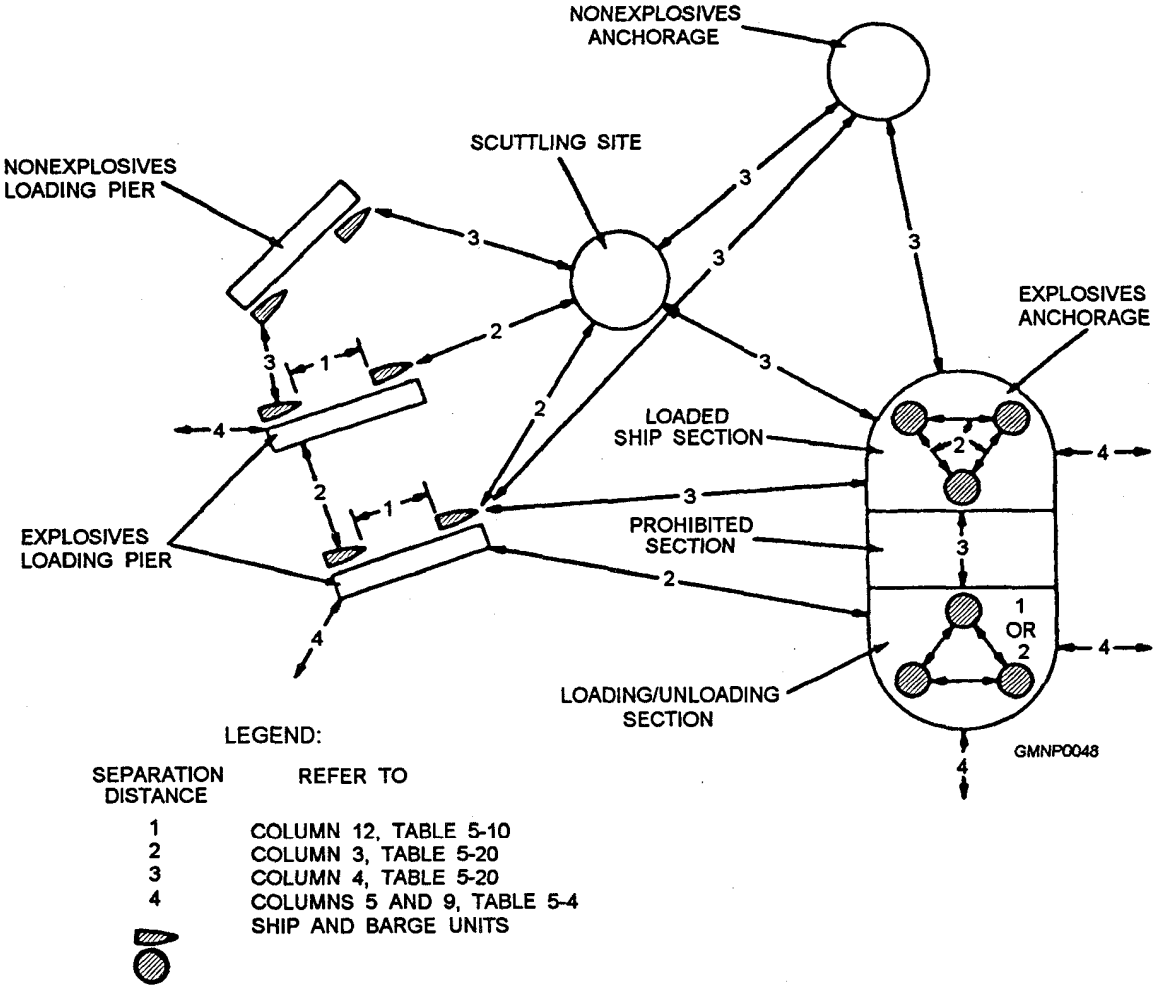

Figure 2-33.—Typical application of quantity-distance at port facilities.

in NAVSEA OP 5, volume 1. You will need to refer to this publication to fully understand the legend accompanying this figure. NAVSEA OP 5, volume 2 provides more specific information about Q-D requirements.

MISSILE HANDLING

LEARNING OBJECTIVE Recall missile handling information, to include weapons station processing; issue and receipt processing; containers, canisters and handling equipment operations; and replenishment methods.

Where do missiles come from and how do they get aboard ship? As a GM, you must know the answers to those questions. Figure 2-34 illustrates the key steps in the processing and handling of missiles. Study it for a moment. Notice that some of the directional arrows go both ways.

WEAPONS STATION PROCESSING

Guided missiles originate at a naval weapons station (NWS or WPNSTA). It is a shore activity whose primary mission is to supply the fleet with all types of ammunition. The major NWSs in the continental United States (CONUS) are at

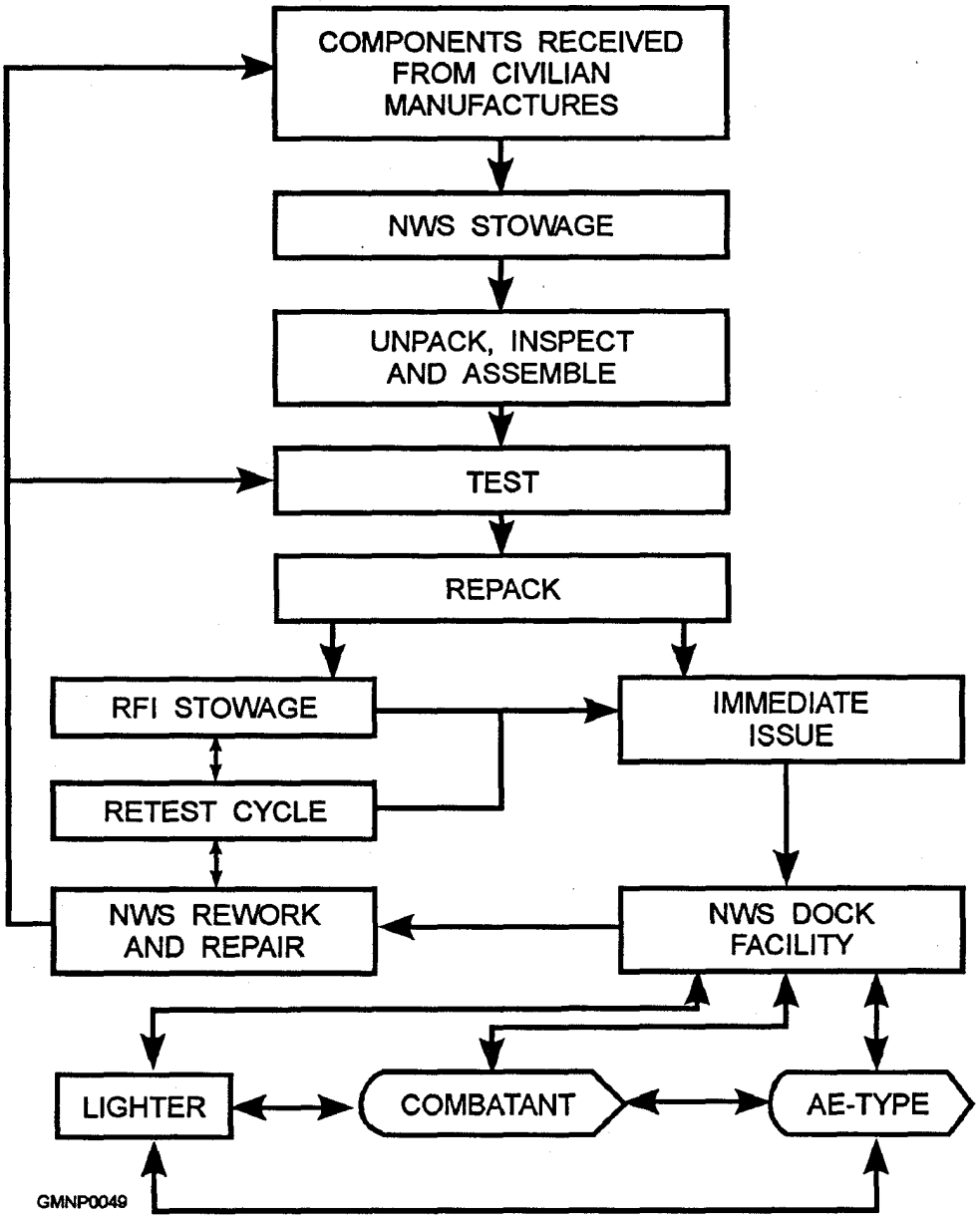

Figure 2-34.—The major sequences of missile processing and handling.

Concord, California; Seal Beach, California Earle, New Jersey; Yorktown, Virginia; and Charleston, South Carolina. There are other smaller ammunition handling activities located throughout CONUS and overseas.

Gunner's Mates are frequently assigned (shore) duty at NWSs. If you get such an assignment, you will be involved with many phases of missile processing. The level of missile maintenance done at an NWS is more detailed and technically oriented than that accomplished aboard ship. The following paragraphs briefly summarize some of the major NWS missile processing events. (Refer to fig. 2-34.)

Issue Processing

Individual missile sections are received from civilian manufacturers. When the components arrive at the NWS, they are placed in stowage. Each component (warhead section, guidance section, etc.) is shipped in its own specialized container. As needed to fulfill fleet missile requirements, the individual components are unpacked and inspected. The sections are tested separately and then carefully assembled to "build" a complete missile.

The fully assembled missile undergoes more testing. Strict quality assurance (QA) standards are checked and double-checked throughout the entire process. When the missile is completely ready, it is certified and classified as an all-up-round (AUR).

The AUR missile is then placed into a missile shipping/stowage container. The round is then transported to either of two locations. If the missile will be issued to the fleet in the near future, it is moved to ready-for-issue (RFI) stowage. Although RFI stowage is only temporary, the weapon will still be checked and inspected regularly.

If the missile will be issued to a fleet unit (ship) immediately, it is moved to the NWS's dock facility. Railroad cars or trucks are used to transport the missile to the loading area/pier. When it arrives at the staging area on the pier, the missile is removed from its container. Normally, the round will be loaded into a missile transfer dolly. The transfer dolly is then moved to the ship, and GMLS strikedown operations take place. (There are other ways to handle missiles on the pier and we'll discuss them later.)

The operation just described could be as simple as delivering one missile to a combatant ship. However, NWSs are capable of replenishing the entire ammunition inventory of any type and size of ship, combatant or otherwise. Ammunition cargo carriers, such as AE- and AOE-type ships and specially contracted commercial vessels, are major customers at an NWS. Although they carry a much smaller capacity of ammunition, AO- and AOR-type ships also are replenished at an NWS. Occasionally, the NWS will load ammunition onto a lighter (ammunition barge). The lighter is then moved to the receiving ship's location and the ammunition transfer conducted at an anchorage.

Receipt Processing

NWSs are equipped to receive missiles (and other munitions) from fleet units. Missiles returned to an NWS are generally in one of two conditions—serviceable or damaged.

A serviceable missile is one that is still in good shape. It may, however, have reached its expiration date, Usually, the age of a missiles explosive and propellant grains is used to establish a "shelf-life" for the round. Beyond that shelf life, the reliability of the weapon may be in question. So it is turned in to be checked. When a ship goes into overhaul, all its ammunition, including serviceable missiles, will be off-loaded at an NWS. Only a small amount of small-arms ammunition will be retained on board.

After a serviceable missile is received at the NWS, it is moved to a rework/repair shop. (See fig. 2-34.) The missile is disassembled and given a complete (inside and out) inspection. Modifications and update alterations are installed and all surfaces are cleaned and preserved. The missile is reassembled, tested, and recertified for fleet use. It is moved to RFI stowage or immediately reissued to a fleet unit. Essentially, the missile undergoes its own overhaul and remains within the Navy's ammunition inventory. That is a cost-effective and time-saving arrangement.

If a missile is damaged or suspected of being damaged, it must be turned into an NWS. That should be done as soon as possible. For deployed units, it may mean transferring the missile to an AE-type ship first. The AE will return the round to an NWS along with the combatant ship's damage report.

Missile damage can result from various causes. Examples include rough handling, wetdown (from a sprinkler system), excessive temperatures, or dud/misfire failures. The NWS accepts these "bad" rounds and conducts a very thorough investigation. If the damage is minor, the NWS makes the necessary repairs and readies the missile for reissue. Sometimes the damage is major and beyond the repair capabilities of the NWS. In that case, the affected section(s) are returned to an industrial repair facility for rework. If the repair cannot be done economically, the section(s) are disposed of according to current instructions.

In summary, naval weapons stations provide several valuable services to the ordnance community. They act as major stock points, injecting new weapons and munitions into the fleet while removing the old and unserviceable items. They also act as maintenance and repair facilities to provide the fleet with the best weapons and munitions possible. The NWS activities play an important role in contributing to the high state of fleet readiness.

CONTAINERS, CANISTERS, AND HANDLING EQUIPMENT

Guided missiles are sturdy, well-constructed machines. But, because of their size, weight, and bulk, they are not that easy to handle. Nor are missiles indestructible. Most missile damage is, unfortunately, a result of carelessness and poor handling practices.

To reduce the possibility of damage, missiles are shipped, stowed and handled with special equipments. Approved containers, canisters, and handling equipments provide maximum missile safety with minimum handling by personnel.

There are hundreds of different and specialized types of containers, canisters, and handling equipments in the ordnance field. Many are designed for a single purpose or use and cannot be interchanged with comparable items. Certain equipments are found only at an NWS or aboard an AE-type ship. The equipments covered in this text represent those you need to know about at this point in your career. Essentially, they are the containers, canisters, and handling equipments used to deliver missiles to a ship.

Containers and Canisters

Missile containers are large, rectangular aluminum boxes used for the shipment and stowage of missiles. Normally, combatant ships do not carry containers on board. Containers are under the cognizant control of the Navy Ships Parts Control Center (SPCC), Mechanicsburg, Pennsylvania, They are maintained by the NWSS and AE-type ships.

Canisters serve as the stowage and launch tube for the missile when installed on vertical launching system (VLS) ships. Also, with packaging, handling, storage, and transportation (PHST) equipment attached, the canister serves as the missile shipping container.

Missile containers and canisters are identified by a mark and mod number. Become familiar with these numbers. We will discuss the following containers and canisters:

1. Mk 372 container – Standard missiles (SM)
2. Mk 632 container – Harpoon missiles
3. Mk 183 container – ASROC missiles
4. Mk 13 canister VLS – Standard SM-2 all-up-round (AUR) missiles Block II, III, IIIA, and IIIB
5. Mk 14 Mod 0 and 1 canister VLS – Tomahawk AUR
6. Mk 15 canister VLS – ASROC missiles

MK 372 CONTAINER.— The Mk 372 Mod 5 container is used to ship and stow medium range (MR) Standard missiles (fig. 2-35).

The bottom section of the container has an inner support (base) assembly. It is shock-mounted to the outer base assembly. A missile is secured to the inner assembly with its lower forward and aft launching shoes. A center missile support (U-frame) is installed over the upper forward launching shoe. It provides a downward force on the shoe and helps secure the missile. A clamping lever (or humping fork) is located below the center missile support. It also aids in securing and prevents the missile from sliding forward.

The rectangular top cover is secured to the base by suitcase-type latches. The cover has a log receptacle, a desiccant access cover, and two air relief (breather) valves. More desiccant baskets are bolted to the inside of the cover. They are filled when the container is open. A humidity indicator is located on one end of the cover.

The Mk 372 container may be lifted by sling, forklift truck, or handlift trucks. The sling attaches to four lifting rings at the corners of the base. Two forklift channels are provided in the center of the base for

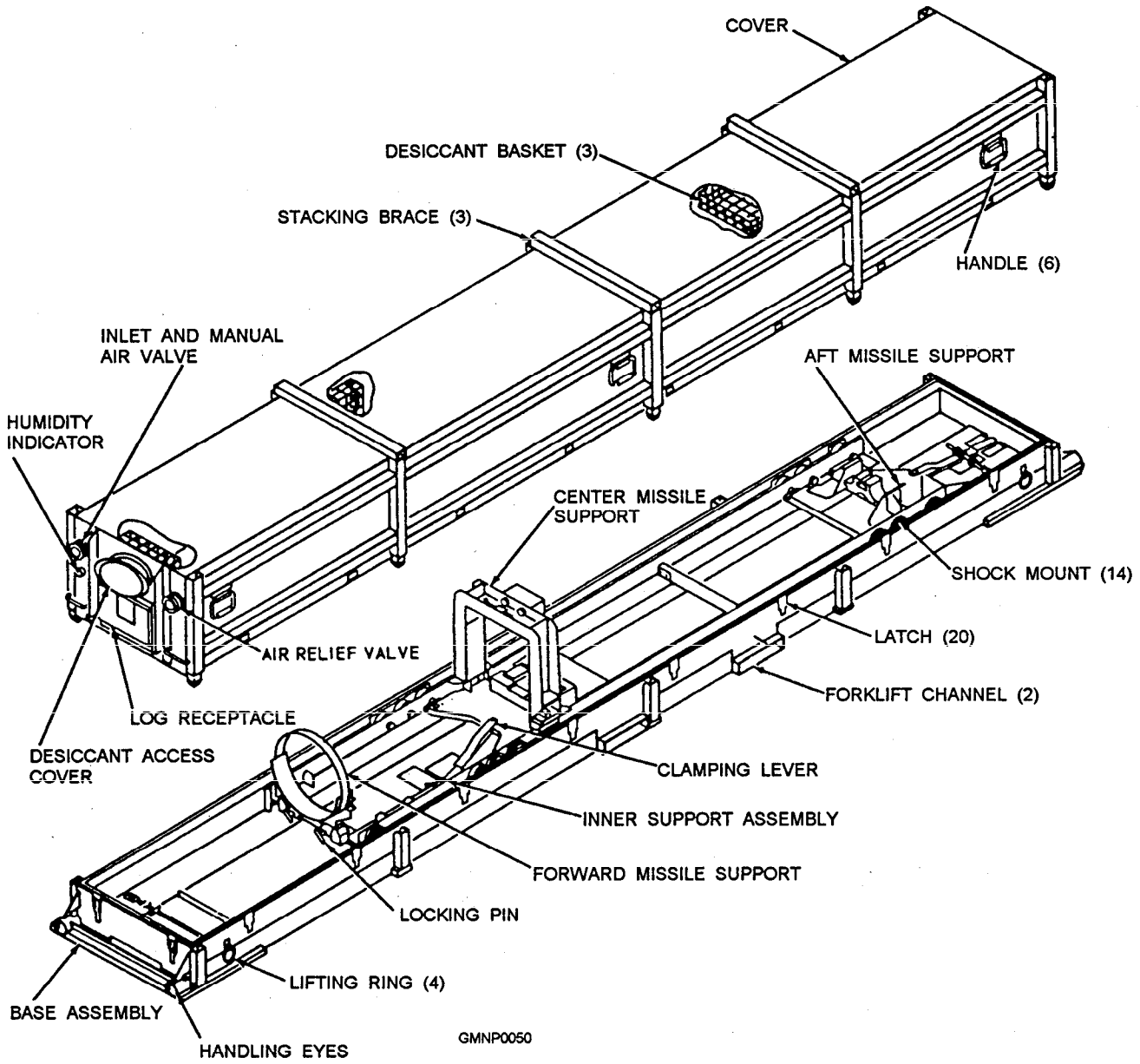

Figure 2-35.—Mk 372 Mod 5 container for Standard MR missiles.

forklift truck tines. Four handling eyes (two on each end of the base) permit handlift truck handling.

MK 632 CONTAINER.— The Mk 632 Mod 0 container (fig. 2-36) is used to ship and stow Standard-launched Harpoon missiles. Physically and functionally it is somewhat similar to a Mk 372 container.

MK 183 CONTAINER.— The Mk 183 container is used to handle ASROC missiles.

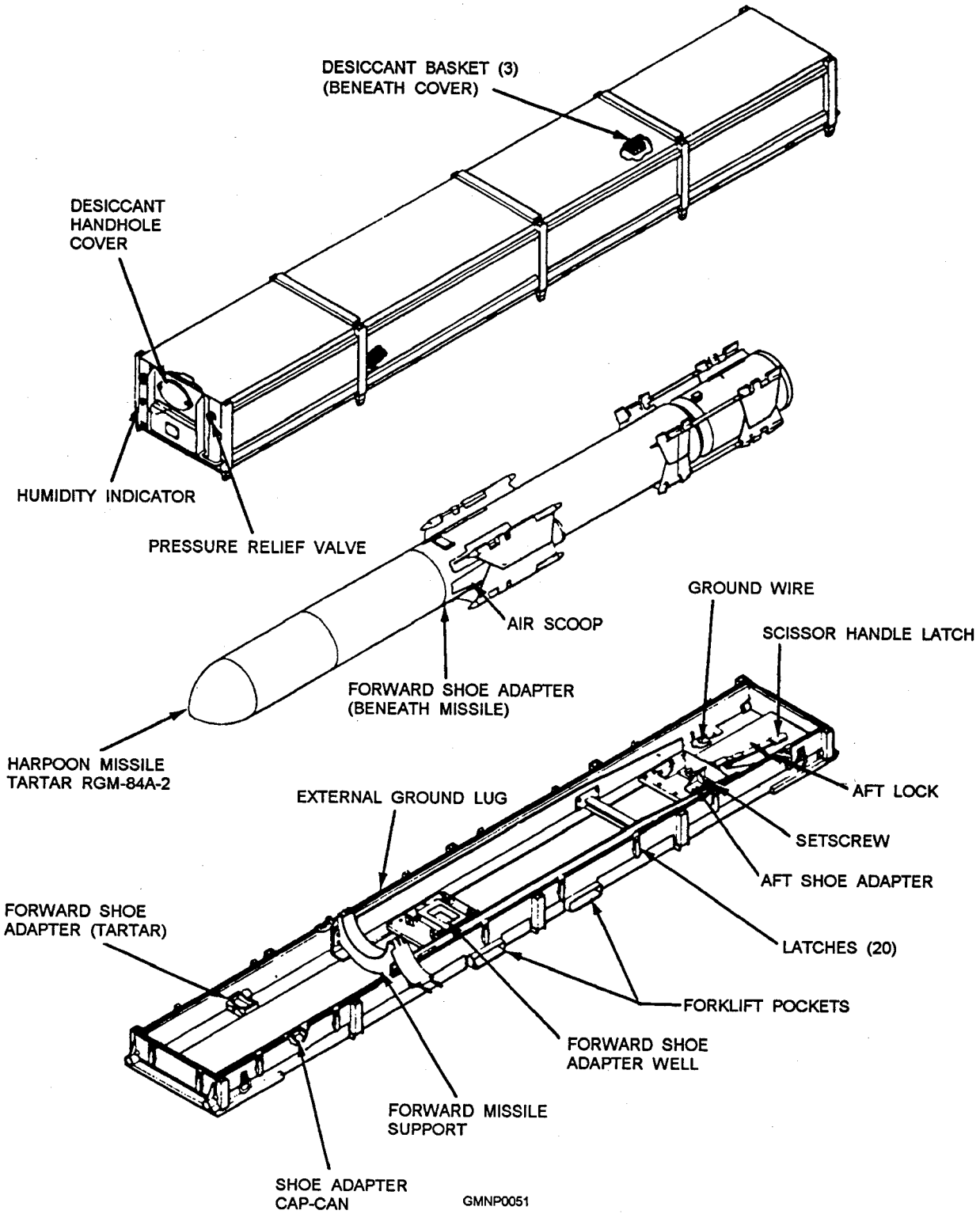

Figure 2-36.—Mk 632 Mod 0 container for Harpoon missiles.

Figure 2-37 shows an external view of the container. Note the prominent extensions on the top cover. They accommodate the fins of the missile. This container may be handled by sling, forklift truck, and handlift trucks too.

There are five different types of canisters currently in use on VLS ships:-Mk 13 Mod 0, Mk 14 Mods 0 and 1, Mk 15 Mod 0, Mk 21 Mod 0, and the Mk 19 Mod 0 nontactical training canister. A 16 pin coding plug in each canister is used by the VLS to identify the type, payload, and Down-Link Frequency code of the missile. A temperature sensor is used to monitor the internal canister temperature. The launcher sequencer monitors the sensor and activates the deluge system when the internal canister temperature exceeds 190°F, except during a launch. The deluge connector is coupled with the launchers quick-disconnect deluge hose. The antenna connector accepts a coaxial cable from the ships telemetry monitoring equipment to receive telemetry data from the antenna of a telemetry missile in the canister before launch. The canisters 145 pin umbilical connector is housed in a shielded box assembly which mates with the canister cable and conduit inside the canister so the launch sequencer can monitor the missile and transfer launch data. The canister safe/enable switch (CSES) is a manually activated switch that interrupts critical signals required to arm and launch missiles. End covers environmentally seal the missile canister. The aft cover is designed to allow the missile exhaust gases to flow by while still providing structural support. The forward cover is a fly-through cover. Internal components, such as rails, snubbers and deluge manifolds, are different in each type of canister. The shell structure is a steel shell with lengthwise reinforcements, and the interior and exterior surfaces are coated with an anticorrosive material. Each canister is 25 inches square but varies in length. The Mk 13 Mod 0, Mk 15 Mod 0, and Mk 19 Mod 0 canisters are 230 inches long. The Mk 14 Mods 0 & 1 and Mk 21 Mod 0 canisters are 265 inches long.

MK 13 MOD 0 VLS CANISTER.— The Mk 13 Mod 0 canister houses the SM-2 BLK 11, 111, 111A, and 111B missiles (fig. 2-38). A Safe and Arm (S&A) mechanism on the launch rail is used to restrain the

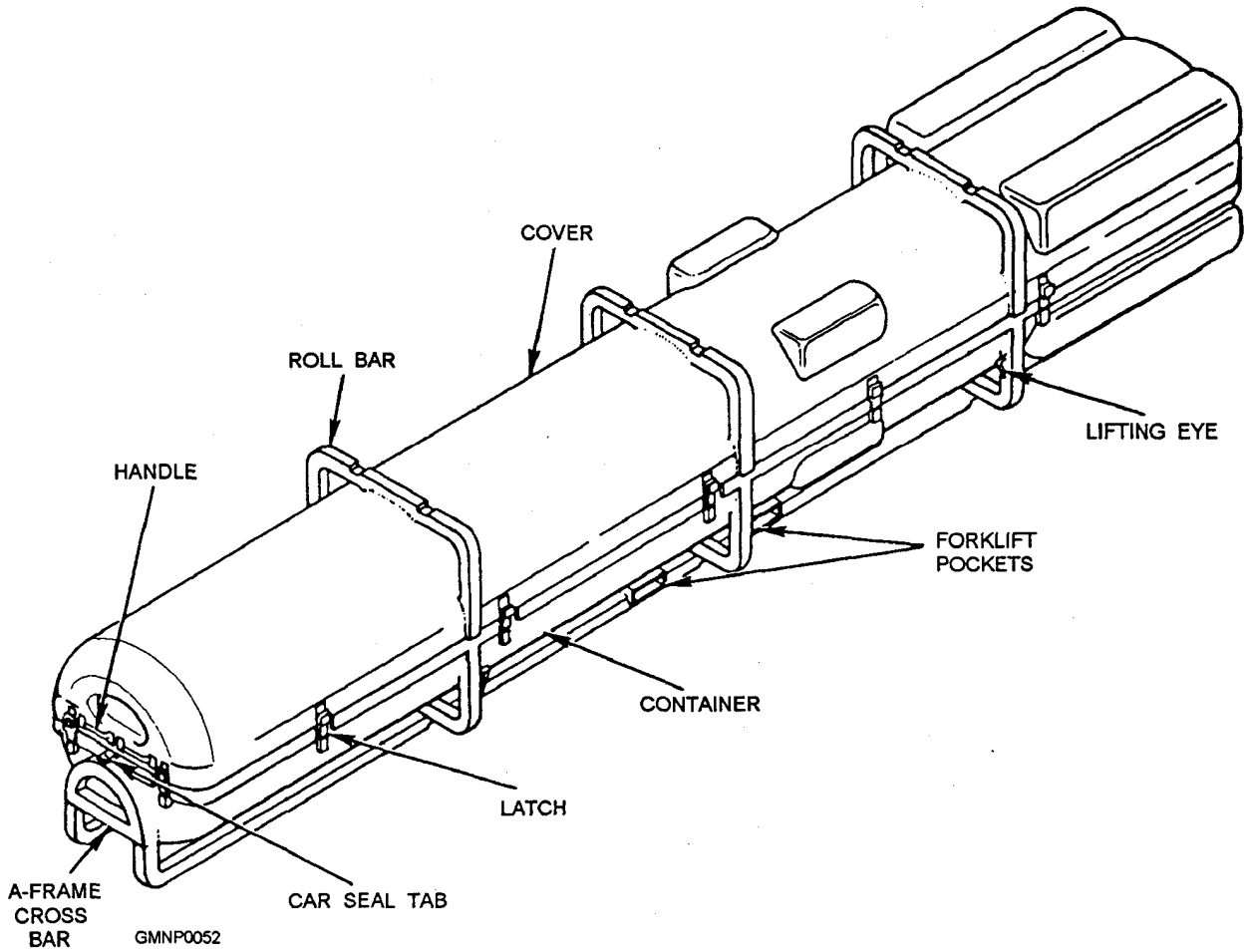

Figure 2-37.—Mk 183 container for ASROC missiles.

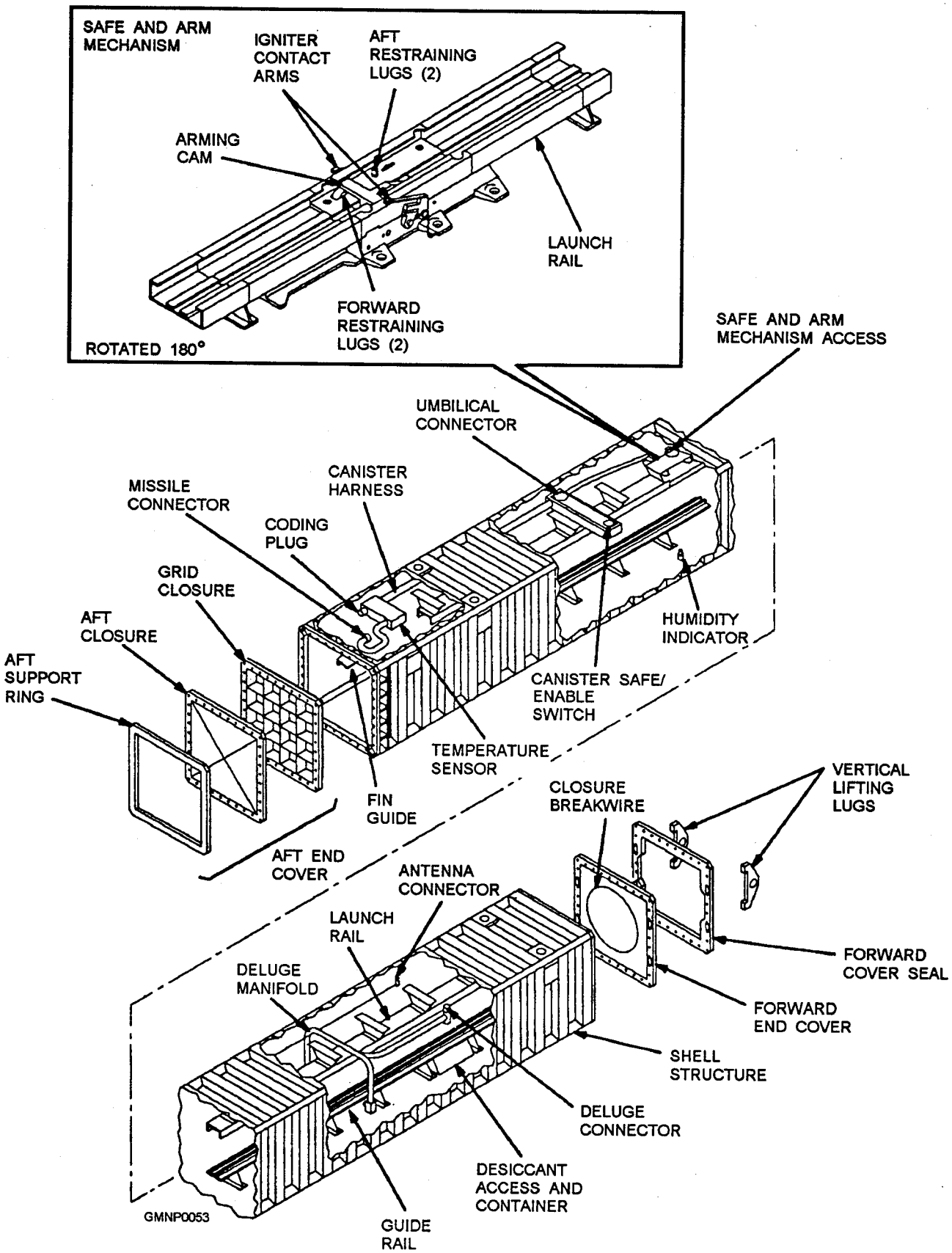

Figure 2-38.—Mk 13 Mod 0 VLS canister.

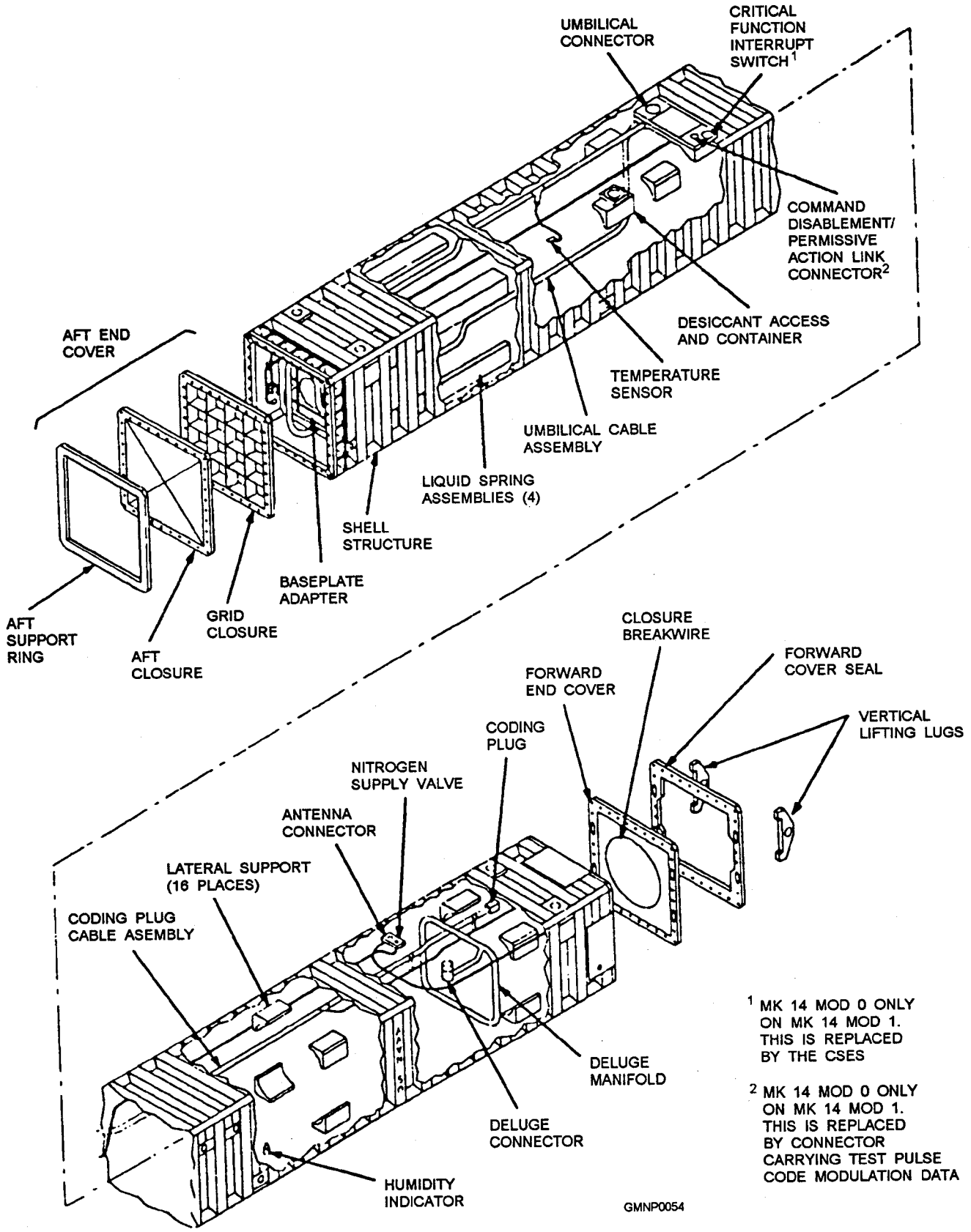

Figure 2-39.—Mk 14 Mods 0 & 1 canisters.

missile, arm, and ignite the Dual-Thrust Rocket Motor. A canister access port with a removable cover allows the use of a safe only tool to return the S&A mechanism to the safe position.

MK 14 MODS 0 & 1 VLS CANISTERS.— The Mk 14 Mods 0 & 1 canisters provide environmental protection, structural and alignment support of the Tomahawk All-Up-Round (AUR) (fig. 2-39). The AUR consists of a missile and booster sealed in a canister that is nitrogen charged to provide additional environmental protection. The shell structure contains a thermal protective lining to reduce structural temperature during launch. The Mk 14 Mod 1 canister uses a CSES for conventional Tomahawk missiles. The Mk 14 Mod 0 canister uses a Critical Function Interrupt Switch (CFIS) which is similar in function to a CSES, with the exception being that it is key operated to prevent the inadvertent selection and launch of a nuclear missile. A Command Disablement/Permissive Action Link (CD/PAL) connector allows access to the nuclear warhead to unlock the warhead for use.

MK 15 MOD 0 VLS CANISTER.— The Mk 15 Mod 0 canister houses the Anti-Submarine Rocket (ASROC) missile (fig. 2-40). The canister internal and external components are the same as the Mk 13 Mod 0.

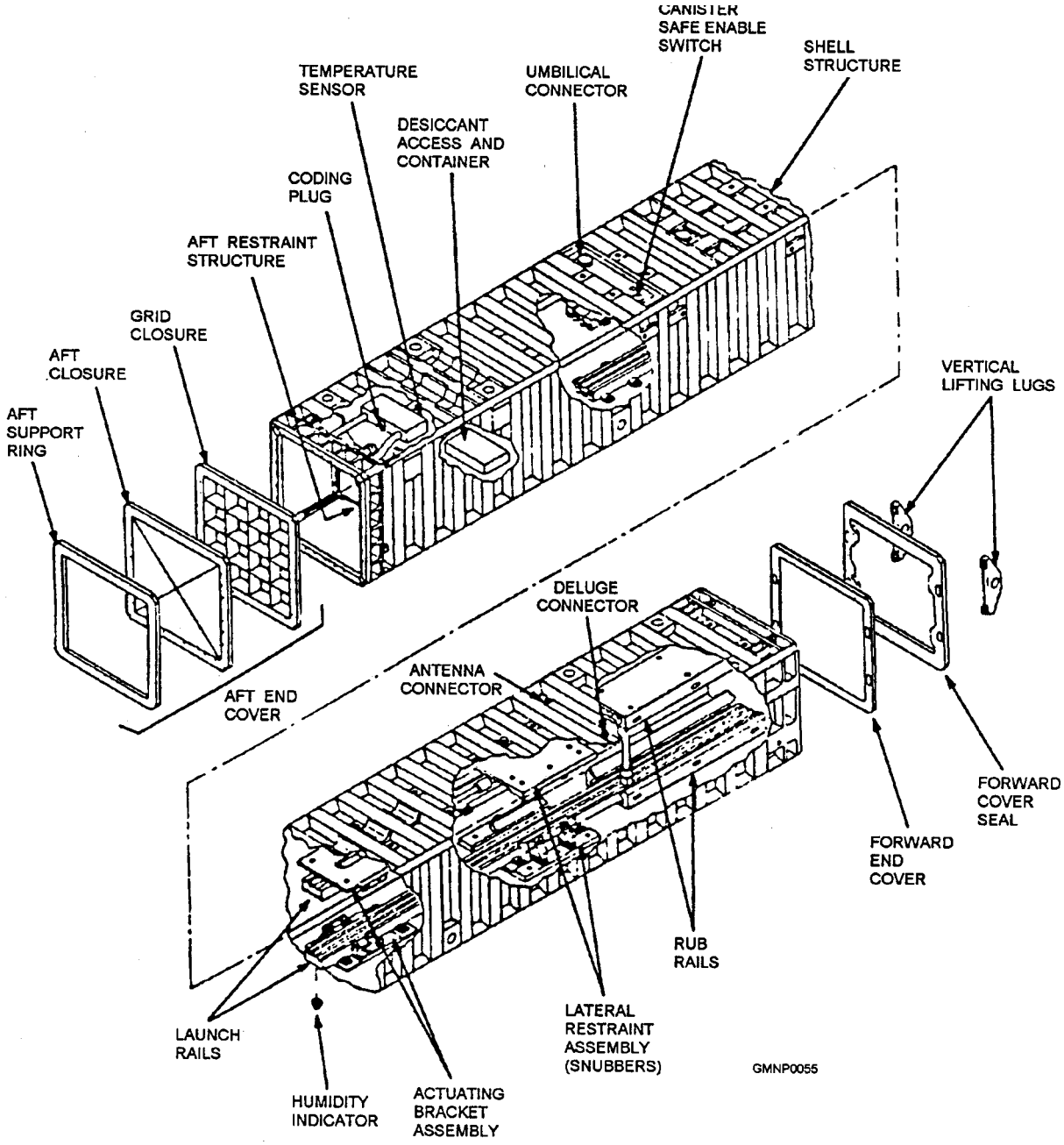

Figure 2-40.—Mk 15 Mod 0 canister.

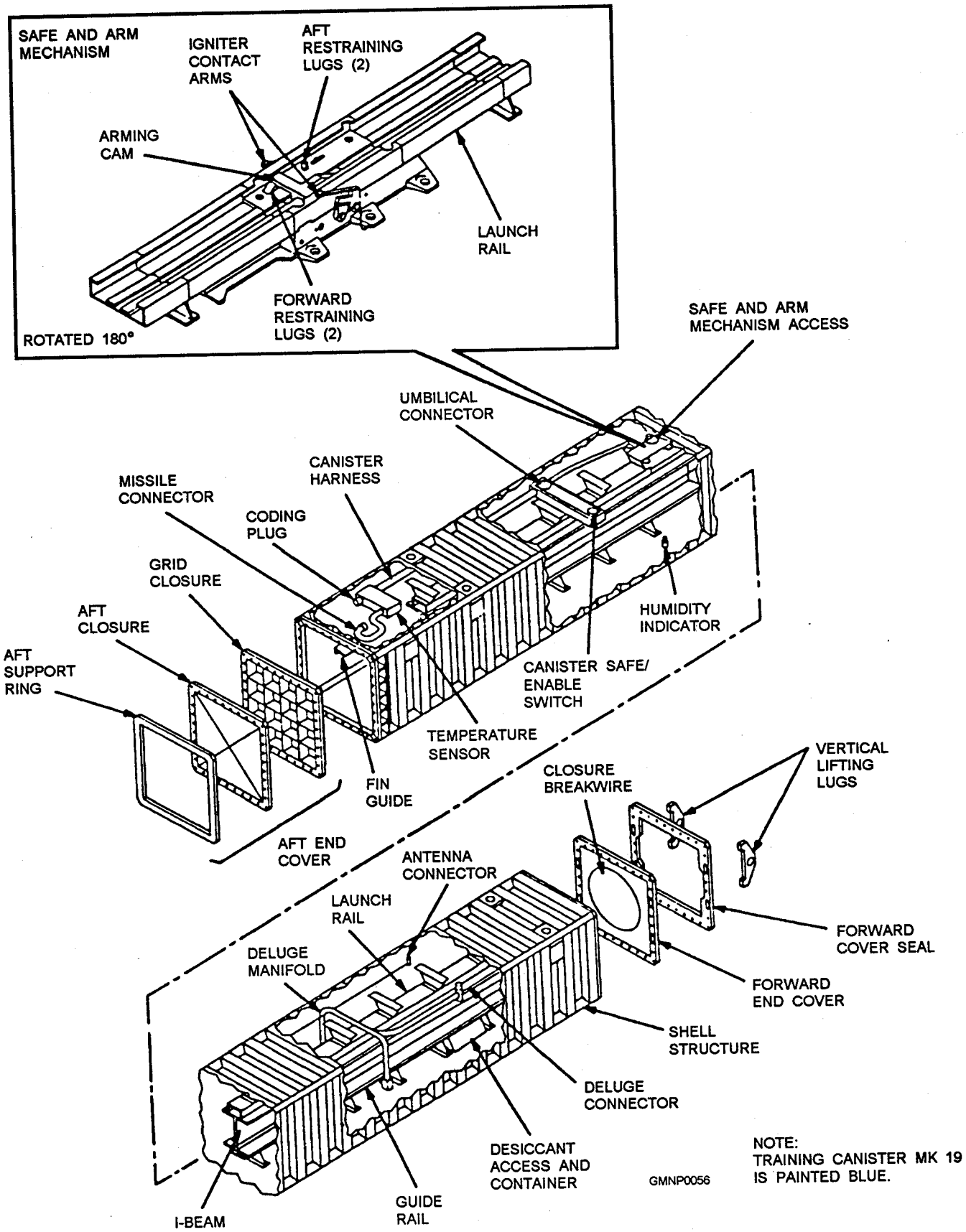

Figure 2-41.—Mk 19 Mod 0 canister.

MK 19 MOD 0 VLS CANISTER— The Mk 19 Mod 0 canister is used for missile strikedown training (fig. 2-41). The Mk 19 canister is painted blue, rather than the normal white, and stenciled with the word "TRAINING." The canister contains a weighted and balancedbeamto simulate a Mk 13 Mod 0 canister. One canister is carried onboard all VLS ships.

MK 21 MOD 0 VLS CANISTER— The Mk 21 Mod 0 canister houses the SM-2 Block IV, extended range (ER) surface-to-air-missile (SAM) (fig. 2-42). Unlike other canisters, this is a single use canister. Dorsal fin flyout guides, booster guide rails, and booster guide cradles provide alignment for the missile during launch. A longitudinal restraint clamp is held secure to the booster until missile launch.

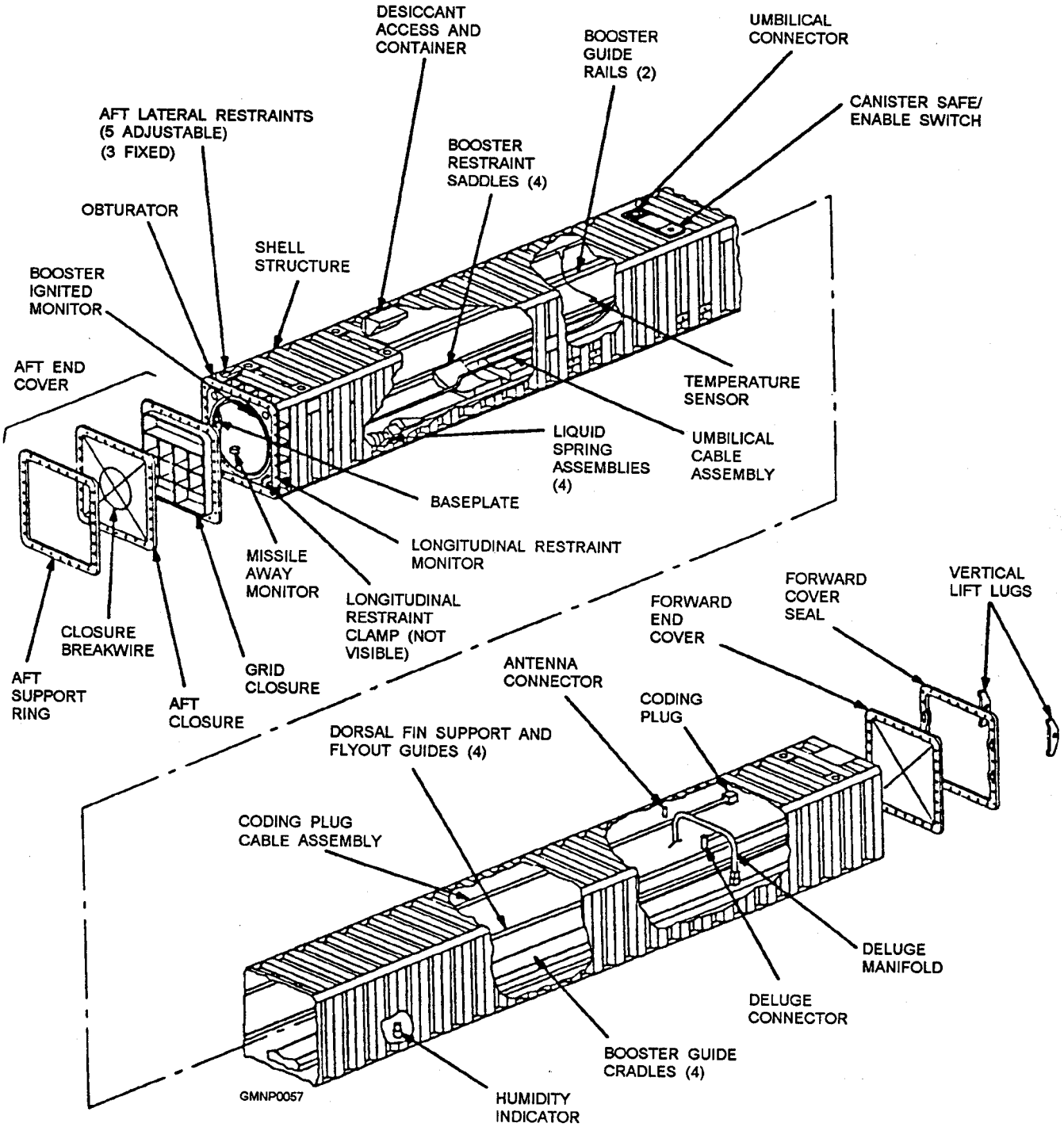

Figure 2-42.—Mk 21 Mod 0 canister.

Handling Equipments

We will limit our discussion of the many types of handling equipments to the following items:

1. Handling bands
2. Mk 6 missile transfer dolly
3. Mk 100 guided missile stowage adapter
4. Mk 20 stowage cradle
5. Hoisting beams
6. Mk 8 dolly loading stand
7. Mk 45 handlift truck
8. Forklift trucks; general purpose

As you will soon see, these equipments are very versatile and, in many cases, multipurpose. Certain items are adaptable for handling any type of SMS missile. Each item listed above can be used at sea and ashore.

Be aware that there are numerous regulations governing the safe use of ordnance handling equipment. Any gear used to lift ammunition and explosives must be subjected to rigorous maintenance, inspection, and testing requirements. Equipments that have satisfactorily passed specified weight load tests will be marked to indicate safe working load limits and certification dates. Further details and guidance concerning handling equipment testing and certification are found in *Ammunition Afloat,* NAVSEA OP 4, and *Ammunition Ashore,* NAVSEA OP 5.

HANDLING BANDS.— The Mk 79 Mod 1 missile handling band is used on all Standard missiles (fig. 2-43). The band has a base, two hinged jaws, and a locking cable. The center of the base (the lower jaw) has a cutout area. This cutout accepts the lower forward and aft launching shoes of the Standard missiles.

After the locking cable is disconnected, the jaws can be opened. The band is installed on the missile and the locking cable is secured again. The dorsal fins of the missile fit within the areas designated as fin slots or fin cutouts.

The VLS canister band Mk 91 Mod 1 (see fig. 2-43) is normally kept onboard destroyer tenders (AD), submarine tenders (AS), and VLS canister supply binge. It is used to steady the canister during strikedown when strikedown is done with the AD/AS or supply barge shipboard crane.

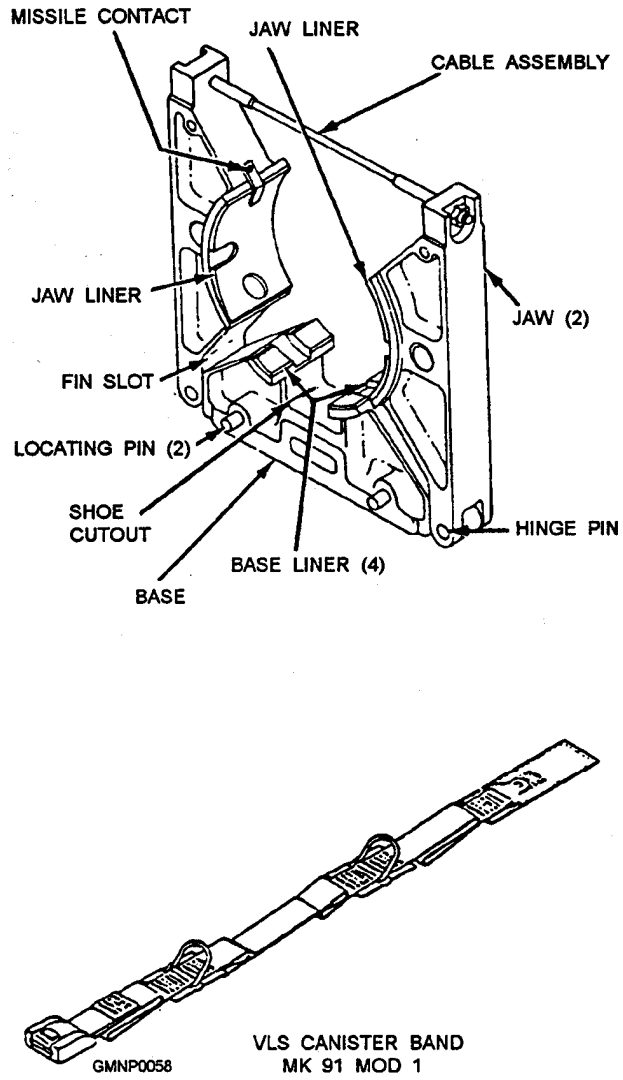

Figure 2-43.—Mk 79 Mod 1 missile handling band and Mk 91 Mod 1 VLS canister handling band.

Handling bands have several purposes. They are necessary for all Standard missile handling operations. The bands support and secure these rounds in their shipping containers, their transfer dollies, and their VLS canisters.

MISSILE TRANSFER DOLLY.— The Mk 6 missile transfer dolly is used to transport rounds between supplying and receiving activities. You will also hear them called "grasshoppers."

Figure 2-44 shows the Mk 6 Mods 2 and 4 dolly in greater detail. The Mk 6 Mods 2 and 4 dollies are used with Standard and Harpoon missiles. These rounds are secured to and suspended from the inner framework of the dolly by their handling bands.

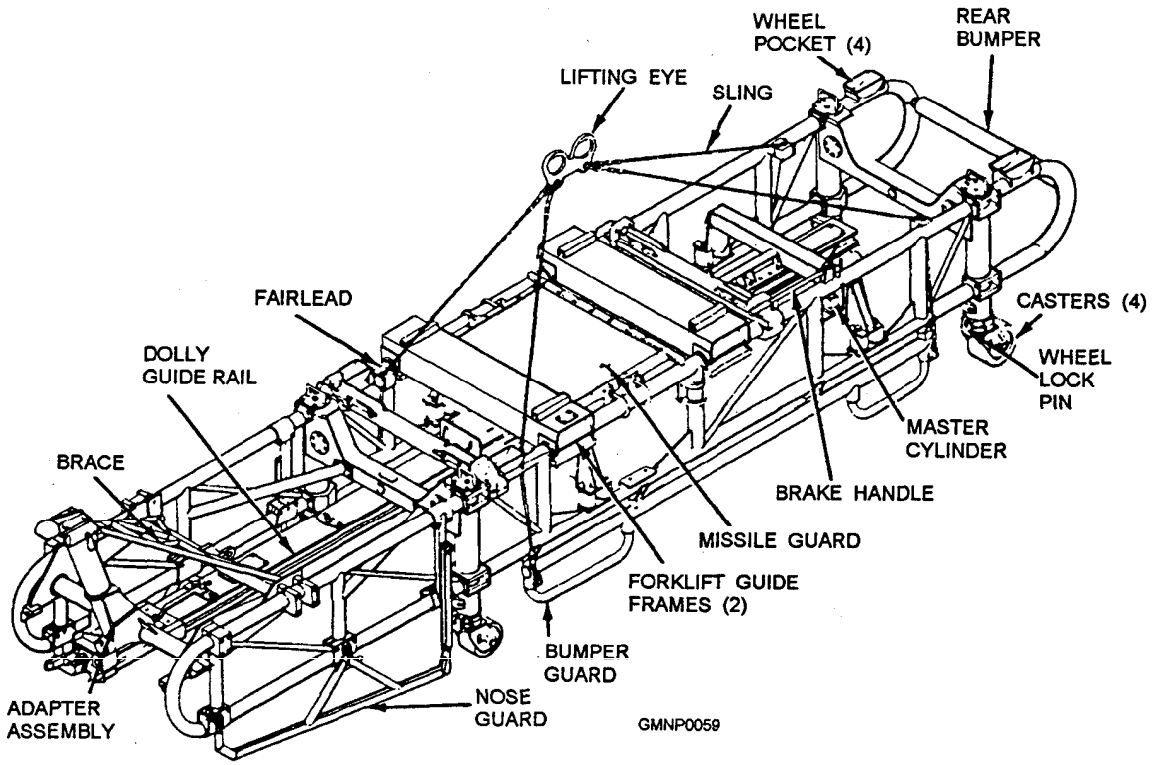

Figure 2-44.—Mk 6 Mods 2 & 4 missile transfer dolly.

The Mk 6 dolly incorporates a length of guide rail and an adapter assembly. The guide rail, secured to the inner framework of the dolly, is identical to any Standard GMLS guide rail. A center track or slot accepts a Mk 13 strikedown chain. Forward and aft shoe tracks guide and support the missile by its upper launching shoes. Two openings are cut into the guide rail tracks. These openings permit the missile's shoes to be engaged to or disengaged from the guide rail of the dolly.

The adapter assembly is mounted to the forward end of the framework of the dolly, In its raised position (fig. 2-44), the adapter can connect to the rear of a guide arm. When the dolly is not in use, the braces of the adapter (arms) can be unpinned. The assembly is then folded to the rear and locked down. With the adapter folded, empty transfer dollies can be stacked on one another. Sometimes the adapter is referred to as a "gooseneck."

The framework consists of welded tubular hardened alloy steel. Four shock-mounted wheel assemblies have manually operated caster locks. The wheels are unlocked whenever the doll y is to be moved from one area to another. Unlocked, the wheels can turn 360° in either direction (similar to the front wheels on a supermarket shopping cart). That eases dolly movement around corners and in tight, limited deck-space areas. The wheels are locked when the dolly is aligned to a guide armor is over a strikedown hatch. The wheels can be locked only when they are at 0° or 180°. The dolly can still be rolled, but only in a straight line (forward or backward).

The dolly has a hydraulically actuated disc-brake system. The brakes are controlled by a manually operated deadman-type brake handle. The handle must be pumped a few times (which builds up hydraulic pressure) to release the brakes. If you are the brakeman on a dolly, please be careful. Releasing the brake handle automatically sets the brakes and Mk 6 dollies will "stop on a dime"! his action not only "surprises" your shipmates, but jars/jolts the missile quite a bit. Release the handle slowly to stop slowly.

A four-legged sling provides a means to hoist the dolly by crane. The sling also actuates the hinged side-mounted bumper guards that protect the center of the missile. Nose guards and a rear bumper provide additional protection. Clear plastic guards keep an unused sling from hitting the missile.

Two forklift guide frames, or channels, are installed on the dolly. Wheel pockets on the top framework permit empty dollies to be stacked in stowage. Loaded dollies must not be stacked. Also, never leave a missile in a dolly any longer than necessary. One other word of warning-watch your toes! Transfer dollies are heavy, cumbersome vehicles. If one runs over your foot, you WILL understand the true meaning of pain.

GUIDED MISSILE STOWAGE ADAPTER.— The Mk 100 guided missile stowage adapter is shown in figure 2-45. It is a simple aluminum alloy weldment that fits along the top and bottom of a handling band. The adapter adds support to the bands when missiles are stacked as shown in the figure. The Mk 100 stowage adapter is normally used when Mk 20 stowage cradles are not available.

STOWAGE CRADLE.— The Mk 20 stowage cradle is shown in figure 2-46. It is a welded aluminum frame with four lifting eyes and two forklift pockets. Three cradle guides accept and lock the Mk 79 handling bands in place. Stacking pockets are provided on the bottom of the side rails (frame) of the cradle.

Figure 2-47 illustrates various missile stacking arrangements using a Mk 20 cradle. (Three rounds high is the limit.) The cradle can also be used to load/unload a Mk 6 transfer dolly if a forklift truck is available.

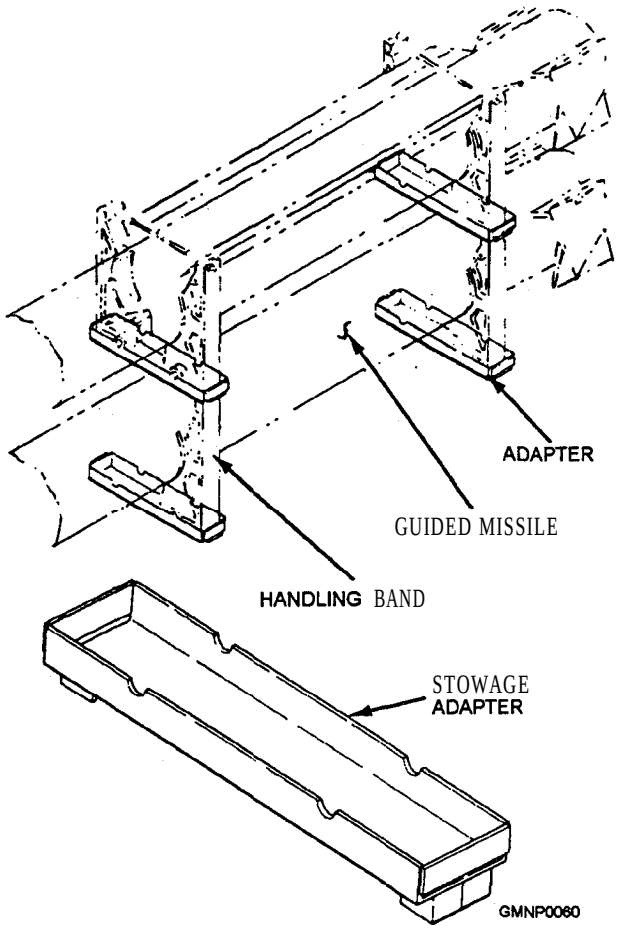

Figure 2-45.—Mk 100 guided missile stowage adapter.

HOISTING BEAMS.— Figure 2-48 shows two common hoisting beams. These devices are often called handling beams or strongbacks. Generally, a hoisting beam attaches to the shoes of the round or to its handling bands. The round can then be lifted out of its shipping container by a forklift, truck, or crane. The missile is then transferred to a Mk 20 stowage cradle or a dolly loading stand. Of course, this sequence can be reversed to reload a container.

The Mk 5 hoisting beam (view A) handles Standard missiles. It is manually connected to the shoes of the missile. The two shoe clamps slide over the upper shoes of the round.

The Mk 15 hoisting beam (view B) can be adjusted to handle all rounds. Instead of clamping to the missile shoes, it attaches to the Mk 79 handling bands. The adapters and cross-arm assemblies can be adjusted to different load lengths. The lifting plate assembly can also be moved to obtain the correct center of gravity for different loads.

DOLLY LOADING STAND.— The Mk 8 dolly loading stand is shown in figure 2-49. It is adaptable for Standard missiles. The stand is used to load/unload a Mk 6 transfer dolly. You might also hear the Mk 8 loading stand called a roll stand or (simply) a load stand.

The stand is a braced, tubular aluminum frame. Two roll ring assemblies are mounted near the ends of the frame. Each ring assembly consists of two separate and removable sections or halves. A ring-locking mechanism is part of each roll ring assembly. Normally, the locking mechanism is engaged and prevents the ring assembly from rotating. Depressing a foot pedal (not shown in the figure) disengages the lock mechanism. The roll ring assembly is then free to be turned. The frame also mounts three pairs of handling band saddles and has a pair of forklift truck pockets.

When handling Standard missiles, the top roll ring halves must be removed. The forward and aft missile shoes are guided into and supported by shoe pockets in the lower ring halves. Handling bands are not required in this type of handling operation.

The stand also provides a means to rotate Standard missiles. Once a missile is loaded into the lower ring halves, the top ring halves are reinstalled and clamped. Depressing the foot pedals unlocks the roll ring assemblies and the missile can be rotated/rolled. A missile may be rolled to ease minor maintenance actions also.

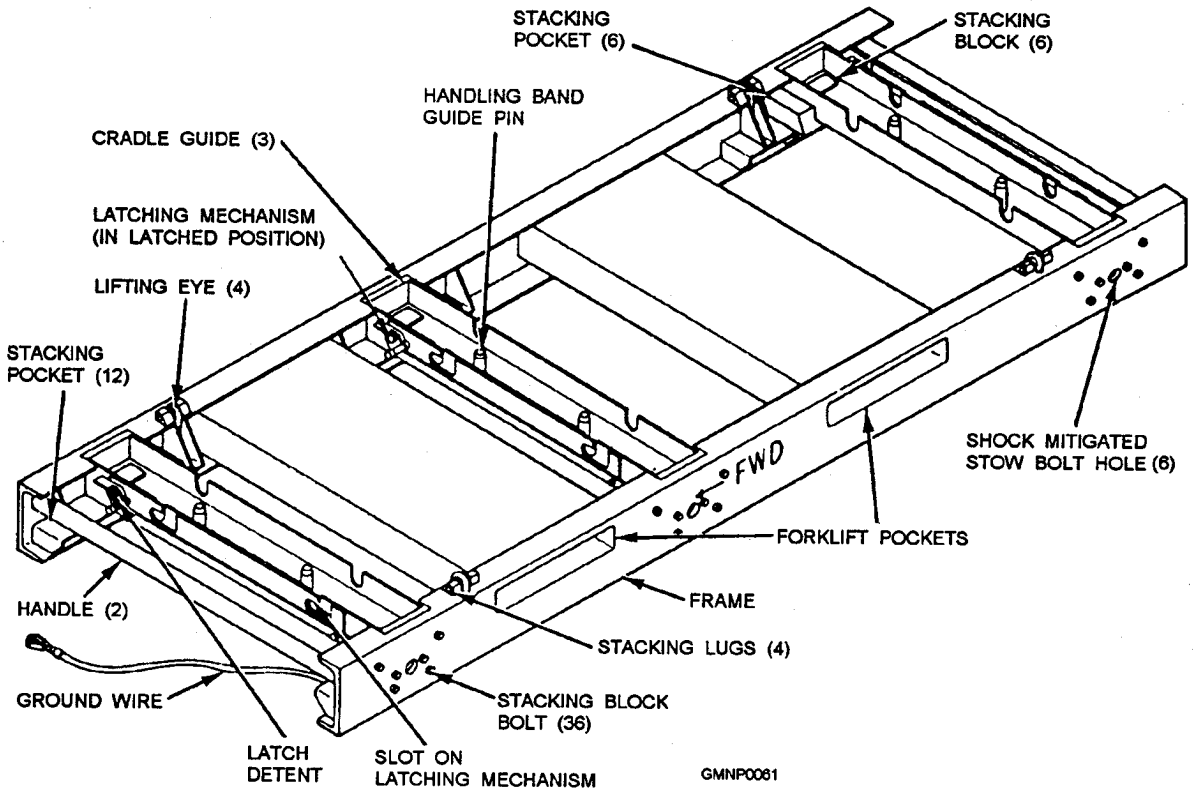

Figure 2-46.—Mk 20 stowage cradle.

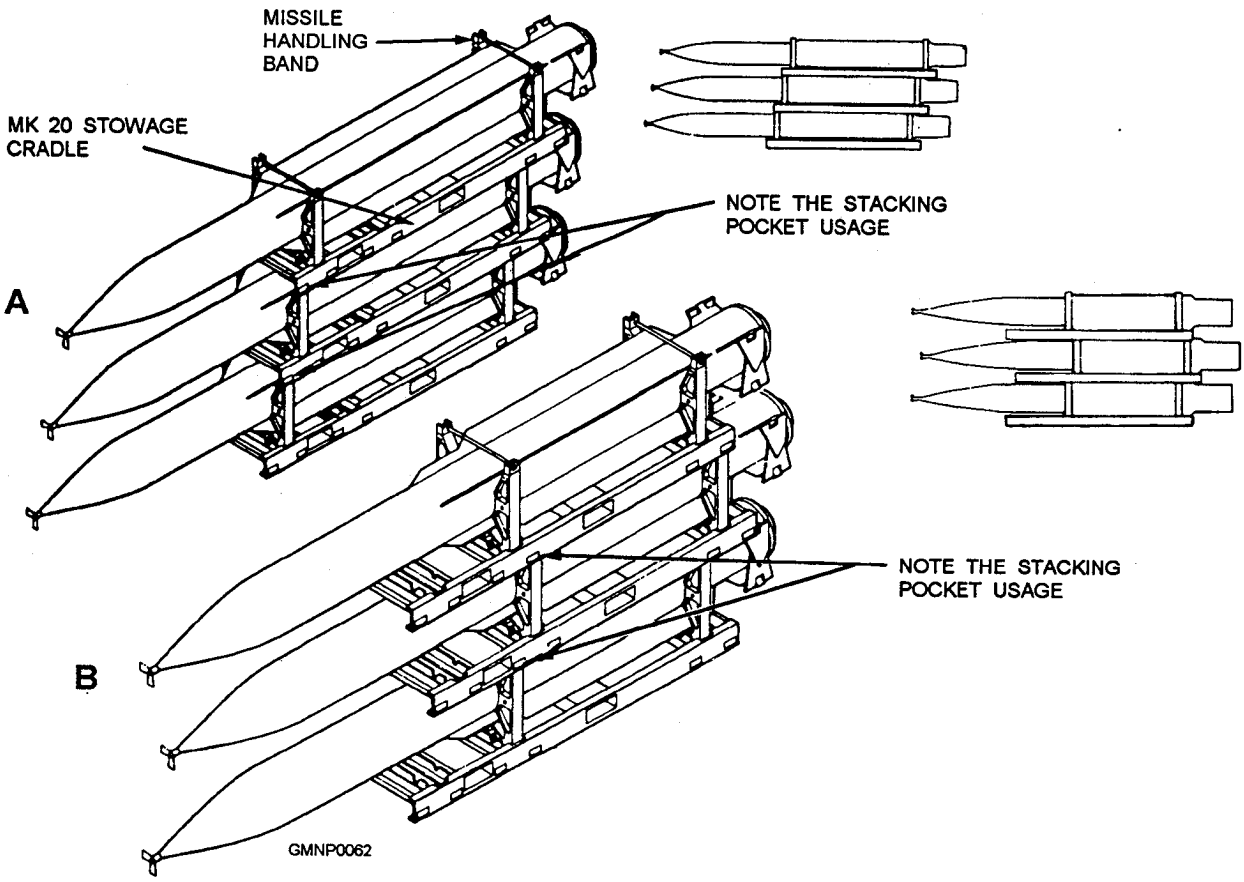

Figure 2-47.—Stacking configurations available with the Mk 20 stowage cradle: A. Staggered-aft method; B. Alternate staggering method.

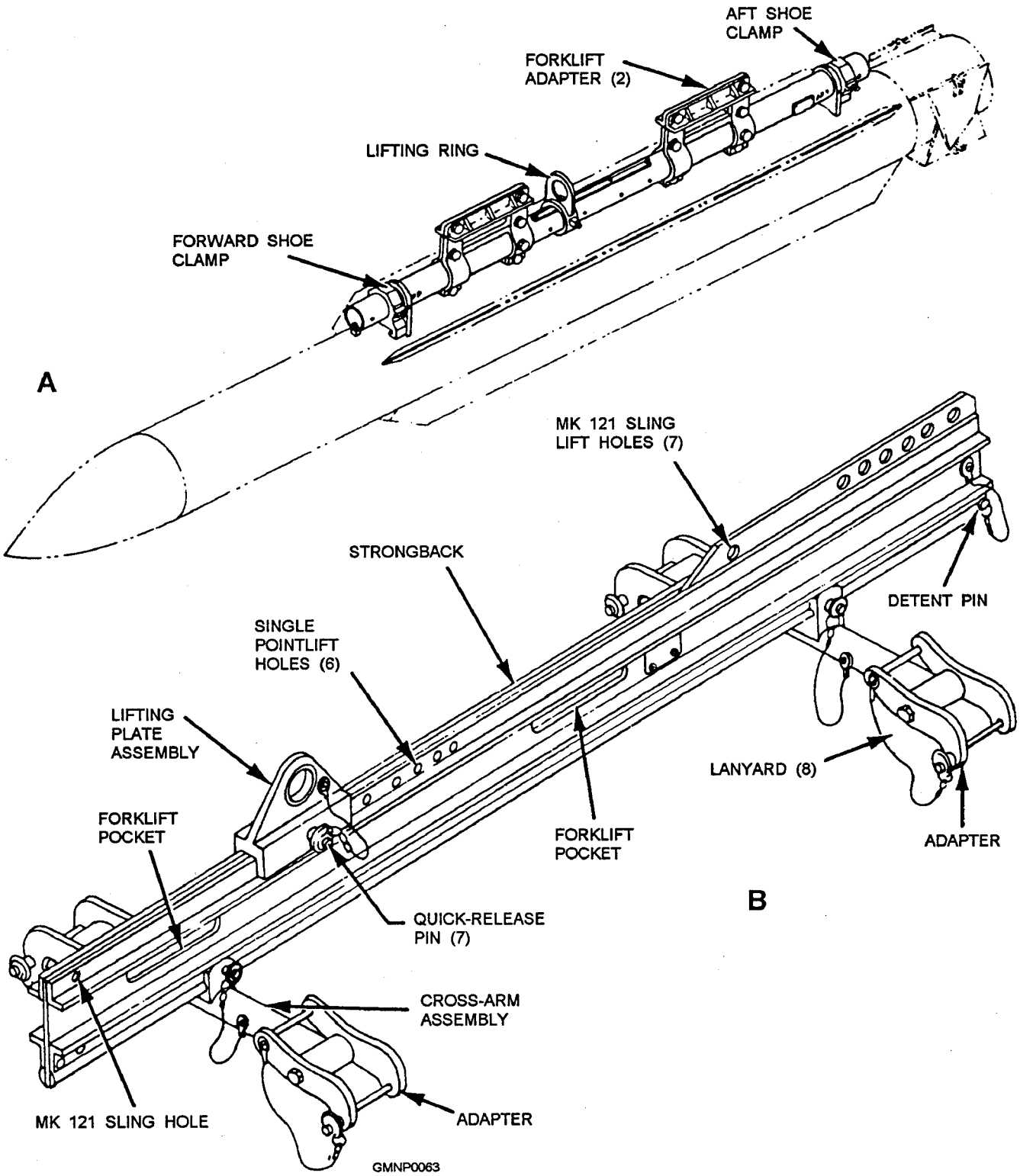

Figure 2-48.—View A. A Mk 5 hoisting beam attached to a missile; View B. A Mk 15 hoisting beam.

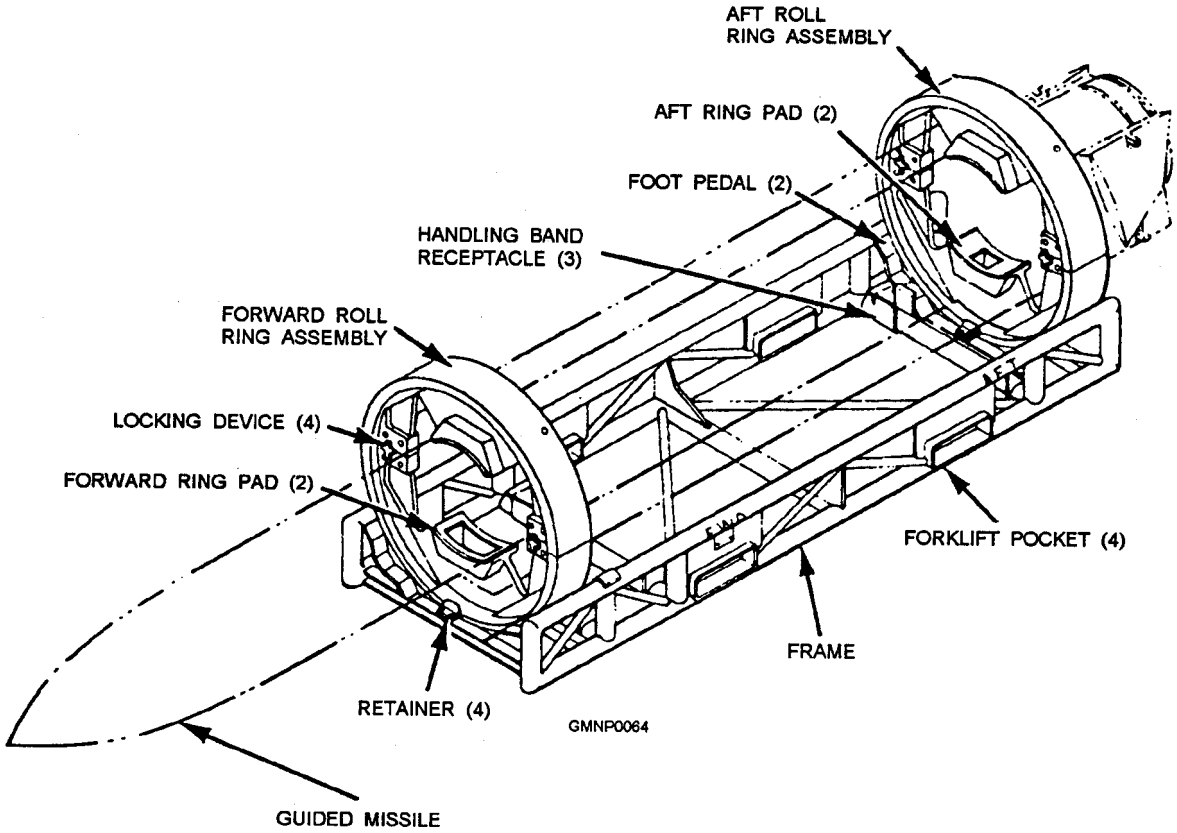

Figure 2-49.—Mk 8 dolly loading stand.

HANDLIFT TRUCKS.— The Mk 45 Mod 1 handlift truck is shown in figure 2-50. Two handlift trucks can be used to move loaded/unloaded shipping containers and stowage cradles. Figure 2-51 illustrates handling of a Mk 372 container. Two people must synchronize their efforts during steering maneuvers. They must also provide the "horsepower" to move the load

The truck consists of an aluminum body, a steel steering post, and a lift mechanism. A reversible ratchet is operated to raise/lower the lift mechanism manually. The mechanism has amounting pin and a lift-arm angle to engage the load.

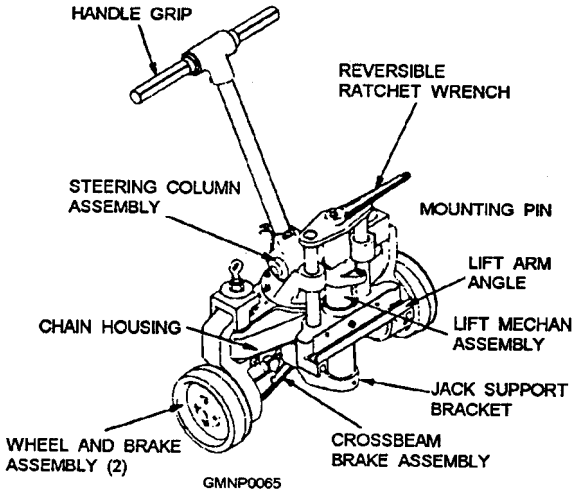

Figure 2-50.—Mk 45 Mod 1 handlift truck.

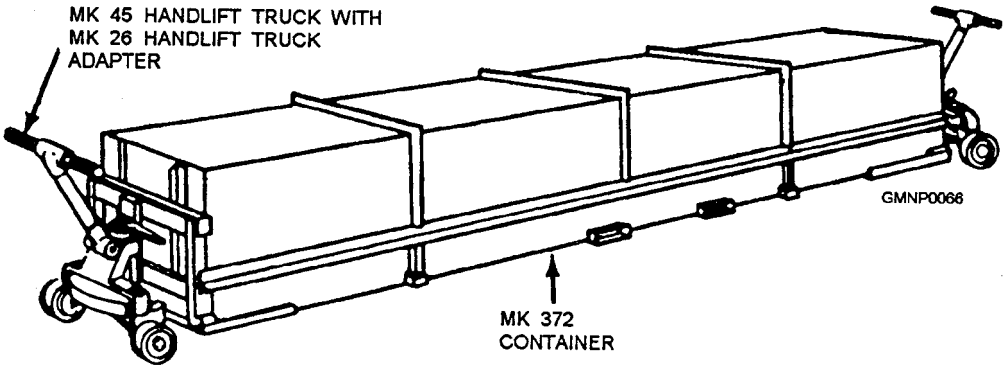

Figure 2-51.—Handling a Mk 372 container with Mk 45 handlift trucks with Mk 26 handlift truck adapters.

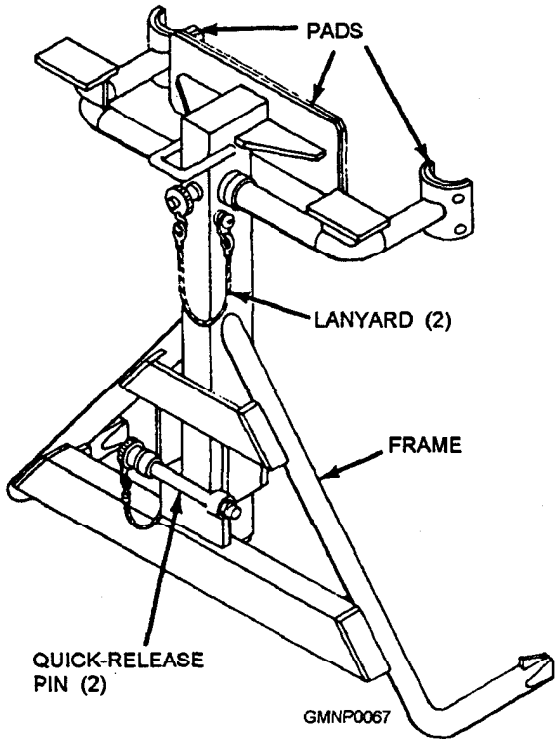

Figure 2-52.—Mk 26 Mod 2 handlift truck adapter.

The truck is guided by moving the steering post (or tow bar). Steering may be accomplished with the post in either a horizontal or "latched up" (near vertical) position. The wheel brakes must be released to permit steering. Each wheel has its own brake assembly. Both assemblies are controlled through a common linkage connected to the handle grips. The brakes release when the handle grips are rotated and held at their full forward position.

The lifting surface of the truck is its single lift-arm angle. The angle engages a bracket on a container, cradle, skid, or special adapter device. The mounting pin serves as a guide pin. It engages a recess on Mk 183 ASROC containers (only). The pin is not a lifting surface. The ratchet handle will raise/lower the lift arm about 8 inches.

A Mk 26 Mod 2 handlift truck adapter (fig. 2-52) can be attached to the front of the Mk 45 handlift truck The adapter makes the handlift truck compatible with various container loads. Pads prevent metal-to-metal contact between the adapter and a container. Two lower arms fit into the lifting or handling eyes of the various containers described earlier. The Mk 372 and Mk 632 containers can be moved using two handlift trucks with adapters.

The Mk 160 Mods O and 1 handlift truck adapters (fig. 2-53) are used to handle Mk 13, Mk 15, and Mk 19 VLS canisters. It also empties canisters Mk 14 and Mk 21. The handlift truck adapter attaches to the handlift truck; two handlift trucks with adapters are required to move a canister.

FORKLIFT TRUCK.— Aforklift truck (fig. 2-54) is a mobile three- or four-wheel automotive unit. It enables one individual to pickup a load, transport, and lift it to various heights. The truck is designed on the cantilever principle. The load is counterbalanced by the weight of the truck in back of the center of the front wheels. The front wheels act as the fulcrum or center of balance.

The truck has a two-tine fork which is secured to the supporting frame. The tines can be moved vertically, frontward and backward, or tilted by a mechanical or hydraulic lift. This flexibility aids in picking up and balancing the load.

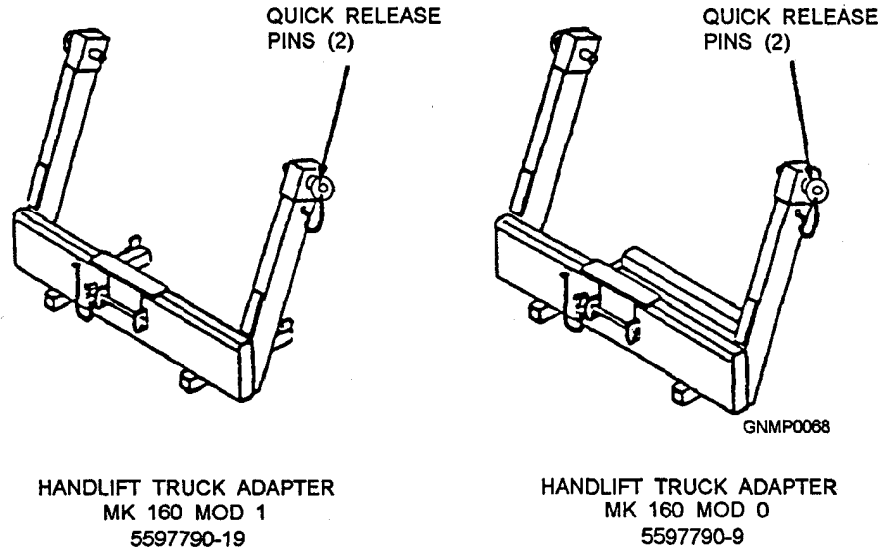

Figure 2-53.—Mk 160 Mods 0 & 1 VLS handlift truck adapters.

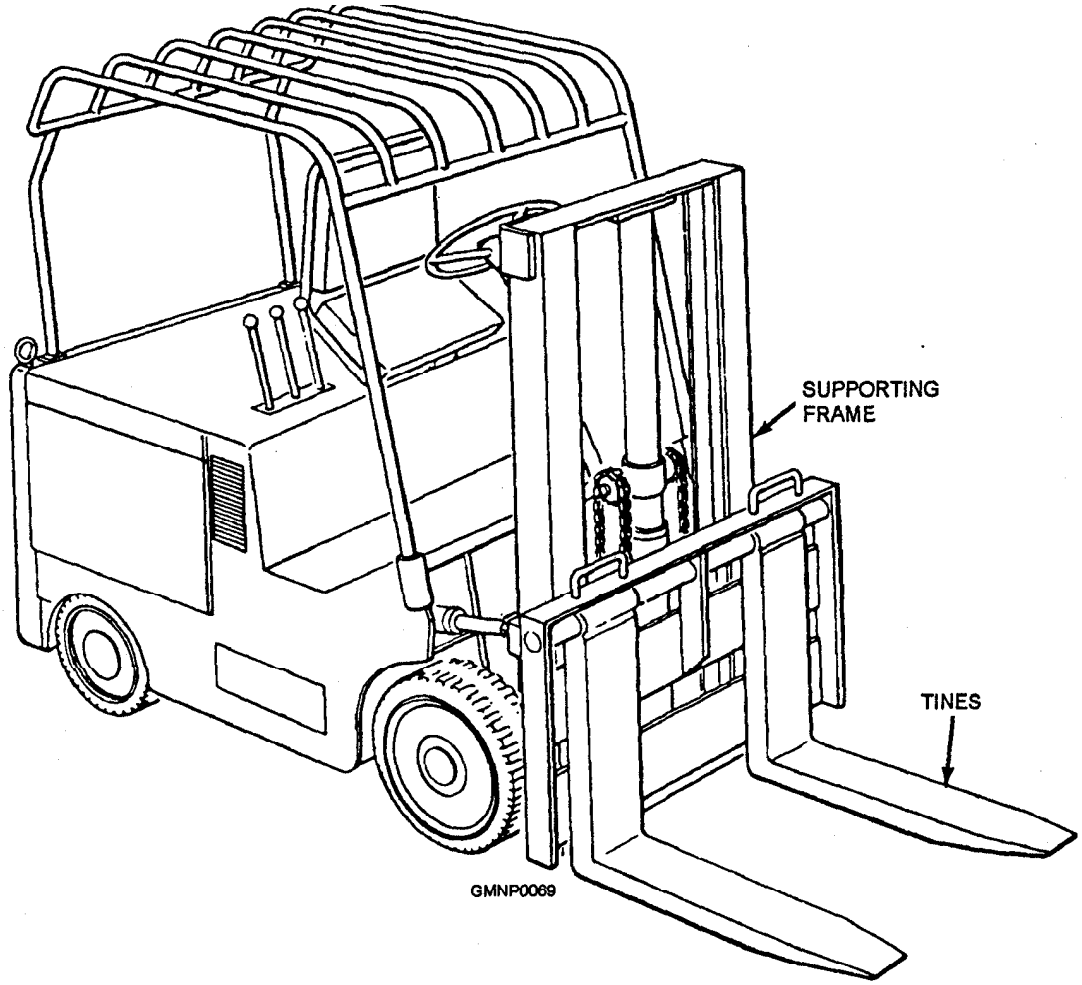

Figure 2-54.—Typical front-loading forklift truck.

Forklift trucks used to handle ordnance may be powered by diesel engines or by a battery-powered electric motor. A mechanical or hydraulic braking system can be used. The steering system may be an automobile- or lever-type mechanism. Pneumatic tires are provided for use over rough and uneven terrains. They are also used in muddy or soft, sandy ground. Solid rubber, cushion-type tires are used over smooth and hard surfaces. These areas include paved roads, magazine and warehouse floors, and pier areas,

Battery-electric forklift trucks are either spark-enclosed or explosion-proofed. They provide safe operation in atmospheres with explosive mixtures of air and flammable gases, vapors, or dust. Spark-enclosed trucks ensure that no flame or sparks from arcing generators, motors, or switches escape to the atmosphere. Explosion-proof trucks are of a heavy steel, fully enclosed construction. They are designed to contain an internal explosion completely. Additionally, a constant flow of air is forced over the stowage batteries to dilute/diffuse any emitted battery gases. The exhaust systems of diesel-powered trucks have spark-arresting devices. This device permits safe operation in areas where exhaust sparks could be a danger.

The capacity of a forklift truck is its most important characteristic. It governs the maximum weight of a load that can be counterbalanced safely. Other important characteristics include such items as maximum lift height, minimum turning radius, range of tilt, and travel speeds.

In missile-handling operations, a forklift truck is an extremely important and necessary piece of equipment. Only trained and qualified personnel are permitted to drive forklift trucks.

Handling Operations

Now that you have some background information on various containers and handling equipments, let's put it to use. The next three figures in the text illustrate certain basic handling operations for Mk 13 Mod 4 and Mk 26 GMLS class ships. Refer to them frequently as

we describe the major events. Take special note of the equipments being used Also, use a bit of imagination and remember the versatility of these items.

NOTE

Certain key steps or events have purposely been omitted from the general descriptions that follow.

TARTAR HANDLING-CONTAINER TO DOLLY.— Figure 2-55 shows a typical Standard In this case, the missile is transferred directly from its container onto a dolly.

View A shows a forklift truck moving a Mk 372 container to a designated handling area. Note that the forklift tines are lowered and the container rides near ground level. This orientation is the safe way, considering center of gravity and counterbalance factors. The forklift will deposit the container on a flat, even surface (either on a pier or A.E-type ship's deck).

View B shows the container being prepared. The lid is unlatched lifted from the base, and hand-carried from the immediate loading area. That makes room for upcoming forklift and dolly movements. The center missile support (U-frame) is removed. The lower missile shoes are unlocked from the inner support assembly of the container.

In view C, a Mk 6 Mod 2 or 4 dolly has been brought into position behind the container. When the dolly is aligned to the container, its wheeIs are locked (straight).

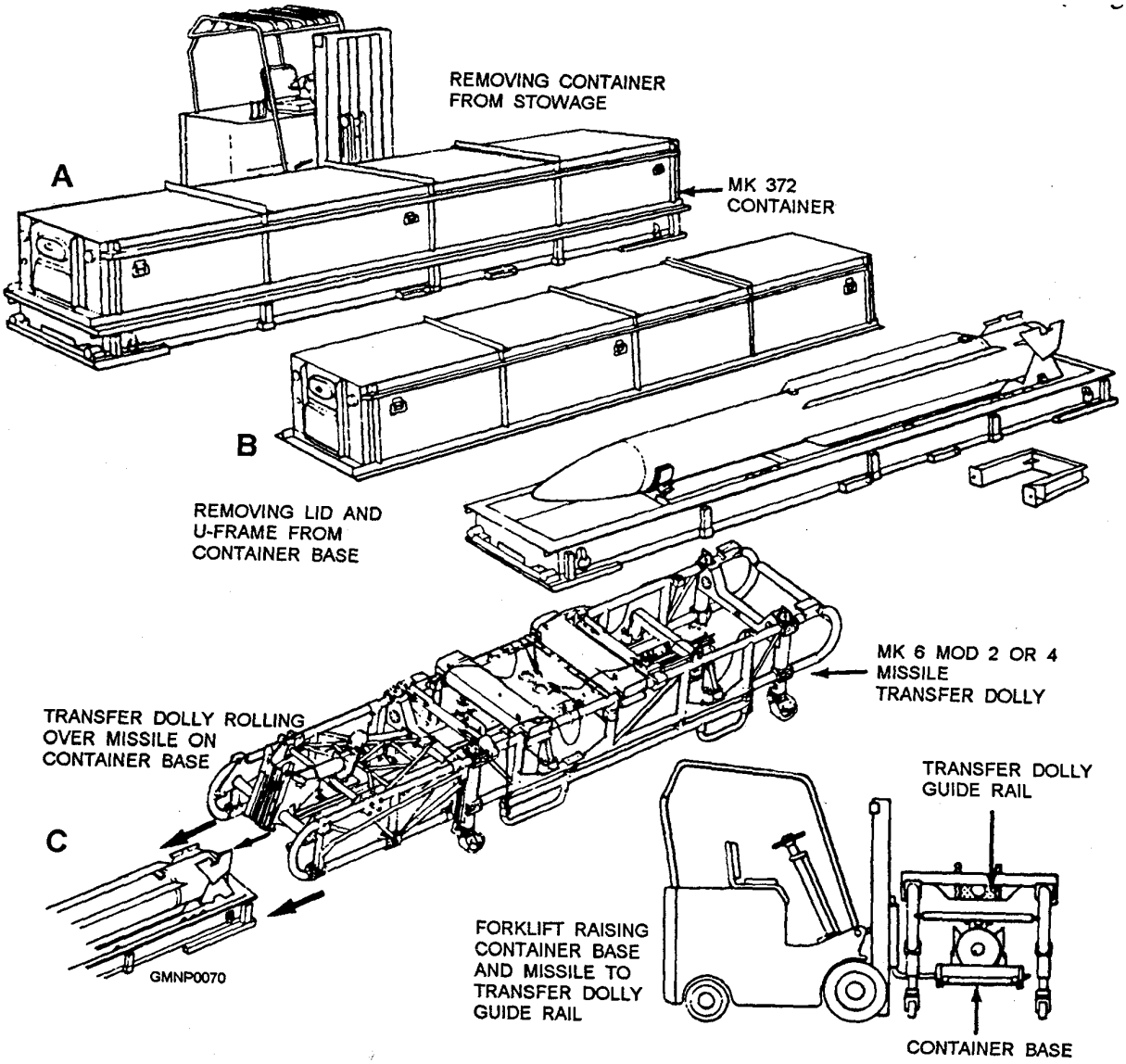

Figure 2-55.—A Standard MR missile handling sequence; container to dolly without roll.

The dolly is pushed forward over the container until the guide rail openings of the dolly are over the upper missile shoes. At this point, the missile shoes are about 9 inches below the guide rail of the dolly.

In view D, the forklift truck has reengaged the container. Carefully, the container is raised until the missile shoes enter the guide rail openings of the dolly. The dolly is pushed so the shoes enter the guide rail tracks/slots. Locking mechanisms are turned to secure the missile in the dolly. The forklift operator lowers the empty container to the ground (pier or deck). The forklift backs away and the loaded dolly is pushed to a staging area. The lid of the container is reinstalled and the empty container is removed from the area.

The procedures described above pertain to an on-load operation. An off-load sequence is essentially the reverse—the missile is transferred from a dolly directly into a container.

STANDARD HANDLING-ROLLING THE MISSILE.— In certain situations, a Standard missile must be rolled or turned 180°. Figure 2-56 illustrates the key steps in this operation.

In view A, a Mk 5 hoisting beam has been attached to the missile shoes. After the missile is unlocked from the container, a forklift carefully raises the loaded beam clear of the base of the container. This operation is often called decanning.

View B shows the missile being lowered into a properly prepared Mk 8 dolly loading stand. When the upper ring halves of the roll ring assembly are resecured in place, the missile is rolled

View C shows the dolly in position to be pushed over the load stand. (The upper ring halves are removed again.) This operation is the same as that described with view C of figure 2-55.

In view D, the forklift is raising the loading stand to engage the missile to the dolly. Again, the operation is similar to view D in figure 2-55.

Now use your imagination. The Mk 5 hoisting beam in view A of figure 2-56 could be replaced with a Mk 15 beam; that is, if Mk 79 handling bands were installed on the missile. Also, in view A, the container could be substituted with Mk 100 stowage adapters or a Mk 20 stowage cradle. (Do you get the idea of the "imagining" exercise?) In view B of figure 2-56, the load stand could be a Mk 20 cradle instead. The operations in views C and D of figure 2-56 would be the same using a cradle. In certain sequences, even the forklift truck can be replaced with an overhead crane/hoist.

Again, handling equipments are very versatile. The conditions of the handling operation will dictate which equipments (or options) can be used.

REPLENISHMENT METHODS

Earlier in the text, we briefly touched upon the subject of replenishment. (Refer to chapter 8's strikedown section.) We learned there were various methods used to transfer missiles between two activities. These methods included UNREP-CONREP, VERTREPs, and pierside and lighter operations using a crane. The following areas of the text describe these methods in more detail. Essentially, we'll see how a transfer dolly (or container) is delivered to a combatant ship.

Experience and on-the-job training are the best teachers in replenishment operations. However, you should have a general understanding of how the different evolutions are performed. You must also realize that any replenishment is (1) a team effort and (2) a dangerous operation. All personnel involved in a replenishment must work quickly, quietly, and efficiently. Cooperation is the key ingredient.

Usually, Gunner's Mates are not directly responsible for setting up and running a replenishment. However, we maybe required to assist in preparing for a replenishment (e.g., as line handlers). The ship's Boatswain's Mates normally set up and run the transfer (CONREP) rigs between ships. They will also direct a helicopter (helo) during VERTREPs. At an NWS or other pier facility, civilian workers will operate and direct a crane. These personnel are trained to do this kind of work.

Our primary job is to move the missile between the replenishment station and the GMLS's strikedown area. A coordinated team effort by handling personnel is vital in this case. Transfer dollies or containers must be moved safely and smartly. That is important in contributing to the overall smoothness of the operation.

Any ammunition transfer is a hazardous evolution considering the quantity of high explosives involved. Protective gear, such as safety helmets (hardhats), steel-toed safety shoes, and lifejackets (at sea), must be worn. Rings, watches, cigarette lighters/matches, and so forth, must not be brought to a replenishment area. Be careful and cautious. Obey the roles and don't rush in your work.

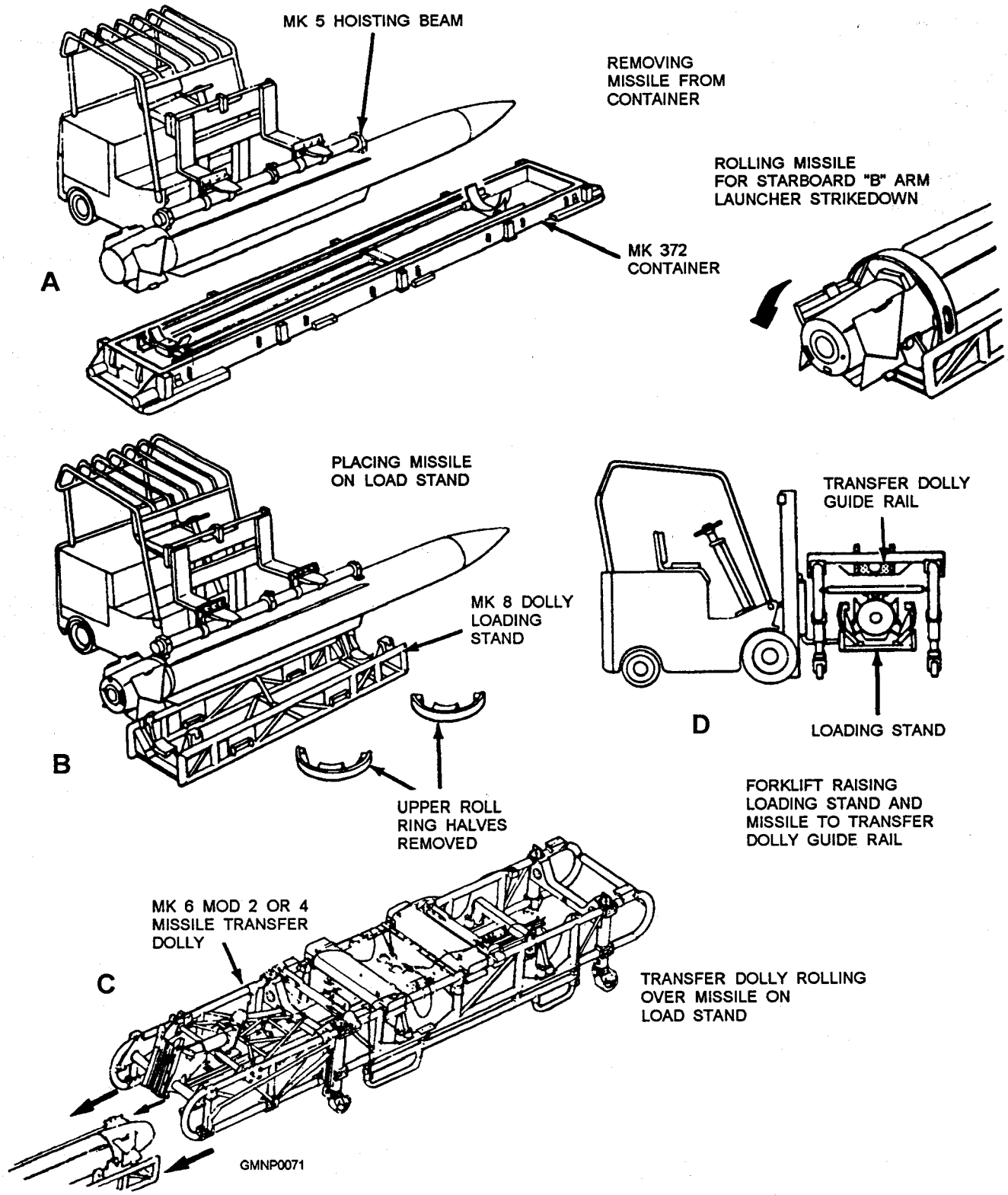

Figure 2-56.—A Standard MR missile handling sequence; container to loading stand to dolly roll.

UNREP-CONREP

The most common underway-connected replenishment (UNREP-CONREP) method for missile transfer today is called STREAM. STREAM stands for standard tensioned replenishment alongside method. It is used to transfer a variety of missile, ammunition, and other cargo loads.

Figure 2-57 illustrates the basic arrangement for a STREAM rig. After the various lines are connected, the sending ship controls all operations. In the figure, the receiving ship is using a sliding pad eye. As the load reaches the receiving ship, the pad eye is lowered. This lowering places the transfer dolly on deck at the replenishment station. The sling of the dolly is disconnected from the cargo hook. The handling crew moves the dolly to the GMLS's strikedown area. Strikedown operations are performed and the empty dolly is returned to the replenishment station.

Additional information about CONREP procedures can be found in *Naval Warfare Publication (NWP) 14, Replenishment at Sea.* Another good (and available) source is *Boatswain's Mate,* volume 2, NAVEDTRA 12102

VERTREP

A vertical replenishment (VERTREP) is a very efficient and versatile replenishing method. A helicopter (helo) is used to transfer just about anything anywhere. Ammunition, cargo, and personnel loads can be transported between ships, ship-to-shore, or shore-to-ship. The only limiting factors to a helo operation are the range and capacity of the helo, and the weather. If the receiving ship is equipped with the proper (and required) lighting, nighttime operations are possible. However, most VERTREP ammunition transfers are conducted during daylight hours (for safety considerations).

During a missile transfer, the helo supports the load (a transfer dolly or container) on a cable/sling arrangement. As the helo approaches the receiving ship, the pilot maneuvers over the "drop" zone of the ship. A landing signalman (usually one of the ships BMs) guides the helo in with a series of hand signals. When the load is over the drop zone, the helo lowers and puts the dolly/container on deck A hookup man (another ships BM) runs to the load and disconnects the helo's hook. The helo rises and clears the area.

When the helo is at a safe distance from the ship, the missile-handling team assembles. The team moves

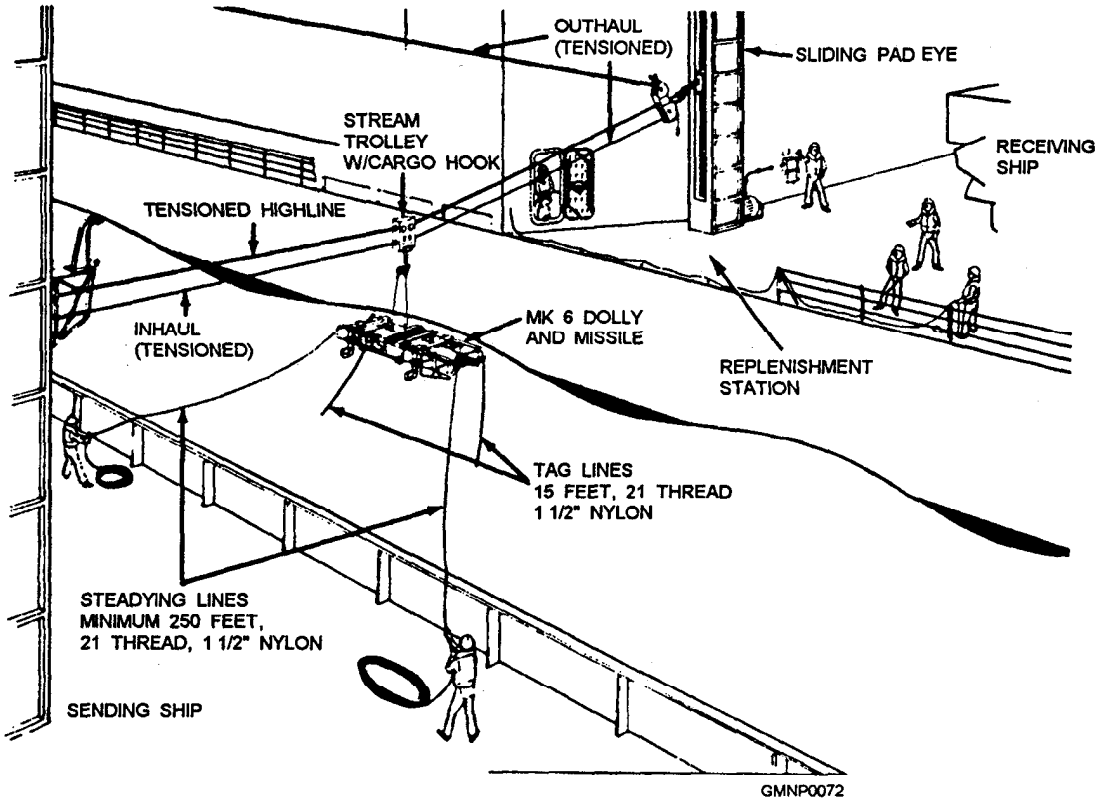

Figure 2-57.—Missile transfer by STREAM.

the dolly or container to the GMLS's strikedown area. On-load (or off-load) operations are performed and the dolly/container is returned to the drop zone. The helo comes back and picks up the load. One missile VERTREP has been completed.

VERTREP is probably the most popular replenishing method today. It has many advantages, such as speed and simplicity. However, from a Gunner's Mate's point of view, two words of caution. First, any heIo operation is considered a dangerous operation. Only the landing signalman and hookup man are permitted in the drop zone area while the helo is overhead. All other personnel must remain well clear of the area at this time. Foreign object damage (FOD) is another danger. Rotor blade suction will draw ANY loose objects into the engine of the helo with disastrous results. Do not wear hats (ball caps) and ensure all gear near the helo area is firmly secured.

The second word of caution applies to the load. Be sure to inspect the missile very carefully as soon as the helo clears the ship. Why do you think the helo area is called a "drop" zone? The missile can sustain some rather severe damage (shocks, bounces, jolts) as it "hits" the deck. If the damage is obvious (e.g., a cracked radome), reject the round before it is moved. Also, check the transfer dolly for damage caused by hard hits on deck. Look at the dolly wheels carefully.

DOCKSIDE REPLENISHMENT

A typical dockside (or pierside) replenishment operation is illustrated in figure 2-58. The major handling equipments and events have already been described. (See figs. 2-55 and 2-56, for example). Any changes or variations to the basic steps in figure 2-58 are minor. For instance, missiles may arrive on the pier in a boxcar instead of on a flatcar. Sometimes a flatbed truck is used,

Quite often during dockside replenishment, the receiving ship is required to supply personnel to assist the pier crew. As a Gunner's Mate, you may get this assignment. You'll actually get the chance to work with the different types of handling equipments we've discussed.

LIGHTER REPLENISHMENT

A lighter is a specially constructed barge designed to carry ammunition. A typical lighter replenishment is seen in figure 2-59. The receiving ship in the figure is a combatant. However, lighter replenishment is also performed with AE-type ships.

The handling operations that take place on a lighter are the same as on a pier or AE-type ship. These operations include canning/decanning, dolly loading/unloading, rolling a missile, and so forth.

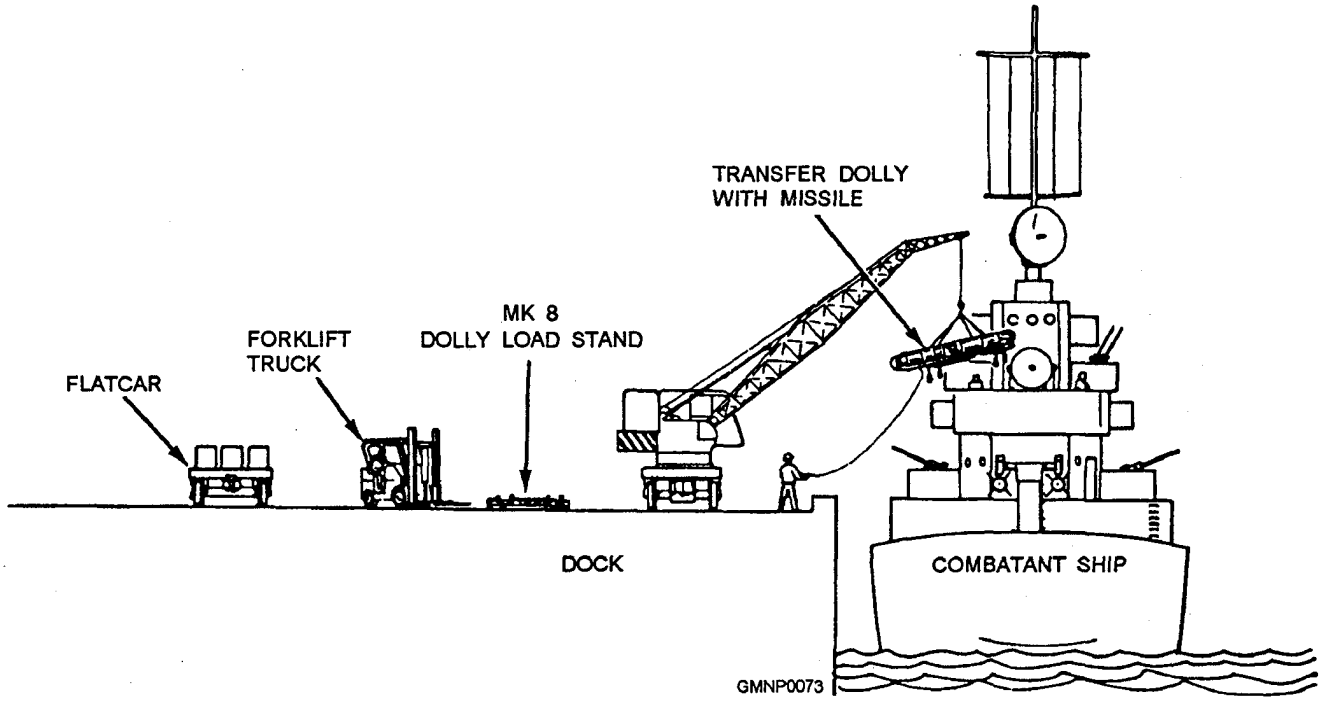

Figure 2-58.—Dockside replenishment.

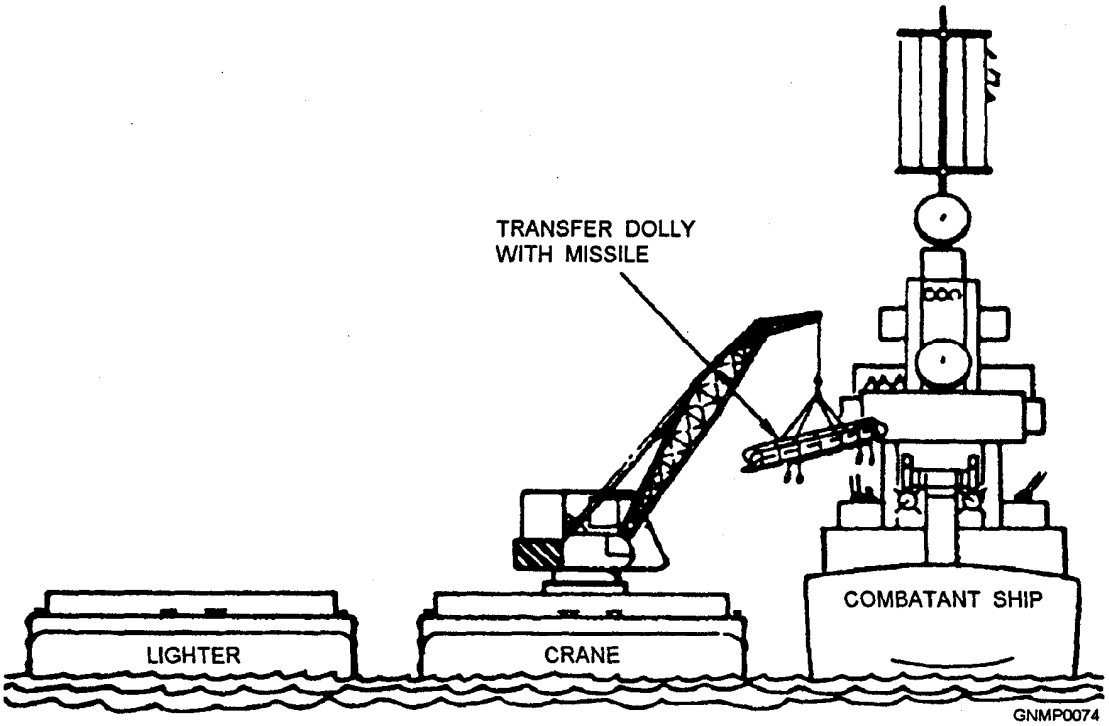

Figure 2-59.—Lighter replenishment.

Lighter replenishment is used for various reasons. Its main advantages are in time and money savings. It is cheaper and quick to load a lighter at an NWS and deliver the missiles/ammunition to a ship. The ship does not have to get under way and that is a huge savings in fuel costs. Another point is that newer AE-type ships are deep draft vessels. They cannot always navigate the rivers and channels leading to an NWS dock Therefore, the lighter replenishment method is gaining in popularity. Many times the lighter and receiving ship will meet halfway and conduct the ammunition transfer while at an anchorage.

This concludes our discussion of missile-handling operations. For the most part, these events occur ashore at an NWS. However, with the exception of assembling and testing, AE-type ships perform the same jobs. Our next subject area deals with the missiles after they are safely stowed aboard a combatant ship.

MISSILES ABOARD SHIP

LEARNING OBJECTIVE Recall information concerning handling, stowing, inspecting, and cleaning and preservation of missiles aboard ship.

Guided missiles are delivered to the fleet in an all-up-round (AUR) status. All tests and certification checks are performed before the missile leaves the NWS. Aboard ship, we are not authorized nor equipped to disassemble, test, or repair any critical missile component.

Aboard ship, our current activities with missiles can be summarized as follows:

1. Handling
2. Stowage
3. Inspections
4. Cleaning and preservation

HANDLING

You will be responsible for the safe and proper handling of missiles at all times. Obviously, this point strongly applies to replenishing and strikedown operations. During these periods, the missile has minimum protection with maximum exposure.

However, do not forget launcher loading, unloading, and intersystem transfer operations. These evolutions are a form of missile handling also. Even though the missile is within the confines of the GMLS, it is still susceptible to damage. Sometimes, due to equipment failure or breakage, missile damage is

unavoidable. Fortunately, such cases are extremely rare. Most missile damage is a result of personnel error.

A common cause of damage can be traced to the experienced control panel operator. Loading and unloading a launcher everyday, especially with a GMTR, becomes second nature to some people. They soon learn the "shortcuts" of a GMLS and can "run the panels blindfolded." In short, bad operating habits are developed. Those bad habits are hard to break when a live missile must be loaded. Quite often, a shortcut that can (but shouldn't) be taken with a training missile just won't work with a live missile. You can guess the outcome.

Safe and proper handling/operating techniques MUST be practiced constantly. There is no room for error or carelessness, especially in routine shipboard tasks. Eliminate distractions and concentrate on what you're doing.

STOWAGE

You will be responsible for the care of the missiles while they are in stowage. That is an important task since a missile spends about 99 percent of its existence in stowage. A large part of this care is related to maintaining magazine environmental control and fire suppression systems in good working order.

Magazine temperature and humidity levels must be checked If they begin to exceed established tolerances, positive action must be taken immediately. Be sure to inform your work center supervisor of the situation.

Good housekeeping has to be practiced in any ordnance stowage area. Maximum effort must be made to keep the magazine area clean. Do not let dirt, oil, or greases accumulate to create potential fire hazards. Oily rags are particularly dangerous.

Missile airframes are not watertight structures. That point was emphasized when we discussed training missiles near the end of chapter 6. Live missiles are subject to the same corrosive damage as are training missiles. Although the problem is not as acute with live missiles (because they are handled less), it is just as serious. Don't let the live missile get wet.

Since (live) missiles are in stowage most of their time aboard ship, how can they get wet? Unfortunately, magazine sprinkler wetdown is all too often the cause. And, as you know, most wetdowns are generally traced to personnel error. We won't repeat the applicable sprinkler warnings, although they cannot be stressed enough. An important point to remember is that ANY wetdown experience MUST be immediately reported through the chain of command

Special measures must be taken if the missiles have been exposed to salt water, as from a wetdown. Each missile must be examined carefully for any evidence of saltwater contamination. Give particular attention to all joints, launching shins, and firing contacts. DTRMs and boosters that had water enter their bore must not be used. These rounds (with wet rocket motors) must be returned to an NWS.

Corrective action after a wetdown involves washing the missile with fresh water. The missile is then dried and corrosion preventive compounds are applied. Every missile subjected to wetdown must be reexamined within 30 days. Details as to the extent and location of corrosion must be noted in the service record of the missile. If the problems are severe enough and continue to worsen, the missile(s) maybe totally ruined. Therefore, after any wetdown, the missile(s) must be turned in to the nearest NWS or missile-handling facility.

INSPECTIONS

You will be required to inspect the missiles at different intervals. Generally, these inspections are visual and are limited to the external surfaces of the round. Inspection procedures and points to check are outlined on maintenance requirement cards (MRCs) or in the applicable Ops. You check different things on different missiles, so be sure to refer to the applicable references.

Normally, missile inspections can be divided into three major periods-receipt, routine, and off-load. These are special inspection situations such as after a casualty wetdown or dud/misfire occurrence. Appropriate MRCs or missile handling Ops exist to provide instructions for these conditions.

The receipt or on-load inspection is very important. Before the missile is moved to the magazine, go over it with a fine-tooth comb. Using an MRC/OP as a guide, check for cracks, dents, chips, and other external surface damage. IdeaIly, the surface of the radome should be perfectly smooth. But, sometimes, bubbles will appear on its surface. The MRC/OP will give size-tolerances of these bubbles; if they are beyond a certain dimension, the round must not be used.

Ensure all control surfaces are installed and folded correctly. Verify that all safety wiring and protective seals are intact. Antenna surfaces must not be soiled or

scratched. If you discover or think you've discovered a problem during a receipt inspection, notify proper authority immediate] y. If the problem can be verified to be beyond acceptable standards, the ship can reject the missile.

Periodically, every missile must be removed from the magazine and given a routine inspection. The interval of routine inspections may vary, but semiannual and/or annual inspections are most common. Many of the same points checked during a receipt inspection are rechecked. Cleaning and preservation work is also performed. Routine inspections are important checks as they contribute to the long-term reliability of the missile.

An off-load inspection is conducted as the missile leaves the ship. If you have faithfully performed the other inspections, the off-load checks should go rather quickly.

The results of any inspection will be logged in a guided missile service record (GMSR). Compare a GMSR to your own health or dental record. Any time you have a physical, the results are recorded to establish your medical history or file. The same thing applies to a missile and its inspection results.

CLEANING AND PRESERVATION

You will be responsible for the cleanliness and preservation of the missiles. These actions are normally performed as part of the routine inspection procedures.

Without fail, your missiles WILL get dirty. They'll get stained from oil and grease drippings and even shoe polish scuff marks. Missiles are not cleaned and preserved just to make them "look pretty." This work is accomplished for some very valid reasons. Cleanliness directly contributes to the prelaunch and in-flight performance of the round.

For example, we mentioned antennas as an item you had to inspect. Suppose a big glob of grease falls onto a proximity antenna. Yes, that glob of grease could affect the operation of a warheads fuze by blocking or distorting the transmitted/received signal. What if a movable tail-control surface rusted in place? Steering and stability control would be severely hampered. Items such as these must be checked, cleaned, and preserved.

Cleaning generally involves the use of good old soap and water along with elbow grease. The outer surfaces of the missile are washed to remove any accumulations of unwanted materials. Be sure to consult the maintenance instructions and use the approved detergents. Warnings will often be included stating where abrasive cleansers (like scouring powder) may or may not be used.

Preservation involves applying corrosion preventive compounds to the external surfaces of the missile. These compounds are designed to resist the effects of moisture on a metal surface. The MRC/OP instructions will specify the currently approved materials and explain where and how to apply the compounds.

SUMMARY

In this chapter we explained how the explosive compounds described in chapter 1 are used in modern Navy gun ammunition. We also described how this ammunition is identified with both color coding and lot numbers. We discussed how ammunition stocks are accounted for and what reporting procedures are used by ammunition managers. We looked at some of the different types of stowage magazines and how these magazines are protected with sprinkler systems. We described some of the handling equipment and the training and safety requirements involved in handling ammunition. Finally, we described missile processing and associated handling equipment. For detailed information and/or additional descriptions of the equipment and procedures discussed in this chapter, you should refer to the references cited.

CHAPTER 3

SMALL ARMS

Strictly defined, the term *small arms* means any firearm with a caliber (cal.) of .60 inch or smaller and all shotguns. Since there are no .60-cal. weapons in the Navy, all pistols, rifles, shotguns, and machine guns up through .50 cal. are small arms. For maintenance purposes, grenade launchers and mortars have also been included in the category of small arms. Such weapons are carried or mounted aboard ship for certain watch standers and members of the ship's internal security force.

In this chapter we will review some of the fundamental principles of small-arms nomenclature and operation as well as how automatic and semiautomatic operation is accomplished. We will then describe the small arms currently in use by the Navy—including handguns, shoulder weapons, shotguns, machine guns, and grenade launchers. We will conclude with brief discussions on small-arms special precautions, maintenance, stowage and issue requirements, range duties, some hand grenade fundamentals, and landing-party equipment.

Small arms intended for match competition (match conditioned) are not covered in this text. They are not repairable at any level other than depot, such as the Naval Weapons Support Center, Crane, Indiana.

SMALL-ARMS FUNDAMENTALS

LEARNING OBJECTIVE Describe the operating cycles of Navy small arms and machine guns.

As a Gunner's Mate, you will be concerned with pistols, rifles, shotguns, grenade launchers, and machine guns. Your responsibility in the field of small arms is twofold. First, you must know how to assemble, disassemble, maintain, and repair them. Second, you must be able to train other personnel in their operation, safe handling, and maintenance.

The majority of small arms are procured from the Army and issued by the Navy to its field activities and the fleet. Maintenance on small arms is performed according to the applicable maintenance requirement cards (MRCs), but all other information (operation, troubleshooting, parts lists, and soon) is normally found in Army technical manuals (TMs) and field manuals (FMs). FMs and TMs list the spare parts, special tools, and organizational maintenance procedures for a particular weapon. The FMis the operator's manual and is intended for personnel in the field who must maintain the weapon. Indexes of Army FMs and TMs are printed in Army pamphlets 310-3 and 310-4, respectively. OP 0 also lists TMs, FMs, and OPs pertaining to small arms.

SMALL-ARMS NOMENCLATURE

Before we begin the study of the individual weapons, let's examine some of the quirks in small-arms nomenclature (names of the parts). Generally, terminology pertaining to the weapons themselves is fairly standard because the Navy has adopted most of the Army's system of identification. For example, the Army uses the letters *M* and *A;* the Navy uses the abbreviations Mk (mark) and Mod (modification). The Army's carbine Ml AZ, for example, is the Navy's carbine Mk 1 Mod 2.

The diameter of the bore of a shotgun is referred to as the gauge of the shotgun. Gauge (with the exception of the .410 shotgun) is not a measurement of inches or millimeters. Instead, it is the number of lead balls of that particular diameter required to make a pound. For example, if you measured the diameter of a bore of the 12-gauge shotgun, you would find it to be 0.729 inch. If you were to make a number of lead balls of this diameter and weigh them, you would find that 12 of them make a pound.

So the larger the bore of a shotgun, the smaIler the gauge number. A 16-gauge shotgun, for example, has a smaller bore than a 12-gauge.

CYCLES OF OPERATION

Every weapon has a cycle of operation. This cycle is a group of actions that takes place upon the firing of one round and that must occur before the firing of the next round. In the automatic small arms currently used by the Navy, the sequence or manner of accomplishing these actions may vary between weapons of different design; however, they are always performed.

There are eight steps in the cycle of operation, as shown in figure 3-1. We will briefly discuss each step.

Feeding

The feeding action places a round in the receiver just to the rear of the chamber. In its simplest form, it amounts to putting a cartridge by hand in the path of the device that will chamber the round. Most often feeding is done by a spring-loaded follower in a magazine. However, magazines have a limited capacity that cannot sustain the continuous rate of fire required by machine guns. Therefore, machine gun ammunition is belted, and the rounds are fed to the rear of the chamber by cam and lever action.

Cambering

This action is required to ram a new round into the chamber. Again, in its simplest form, this amounts to placing the round there by hand. In military weapons, cambering takes place as the forward moving bolt strips the round from the feed mechanism and forces it into the chamber. The bolt closes on the cartridge and the extractor attaches itself to the extracting groove machined around the base of the cartridge case.

Locking

The locking action holds the bolt in its forward position for a short period of time (after firing) to prevent the loss of gas pressure until unlocked by other forces. For low-powered weapons, it is possible to seal the breech for a short time by merely increasing the weight of the bolt. The bolt starts to move upon firing; but, if sufficiently heavy, it will not move far enough to release the gases until their pressure has been satisfactorily reduced. This method is used by submachine guns and other straight blowback-operated small arms, such as the .22-cal. rimfire autoloading pistols.

Firing

The firing action occurs when the tiring pin strikes the primer of the cartridge.

Unlocking

Unlocking occurs after the firing of the round. Actions for unlocking are just the reverse of those required for locking. For most rifles, the first movement of the bolt is a rotating movement that disengages the locking lugs.

Extracting

The extracting action is the process of pulling the empty case back out of the chamber. The extractor (normally a small hooked piece of metal encased in the bolt) snaps over the rim of the cartridge case when the round is chambered. As the bolt moves rearward after firing, the extractor hauls out the empty brass.

Ejecting

It is not only necessary to pull the cartridge case out of the chamber but also to throw it free of the receiver. This action is called ejection and is created by placing a small projection on one side of the receiver so that, as the bolt and case move to the rear, the case will strike the projection and be expelled from the weapon. This

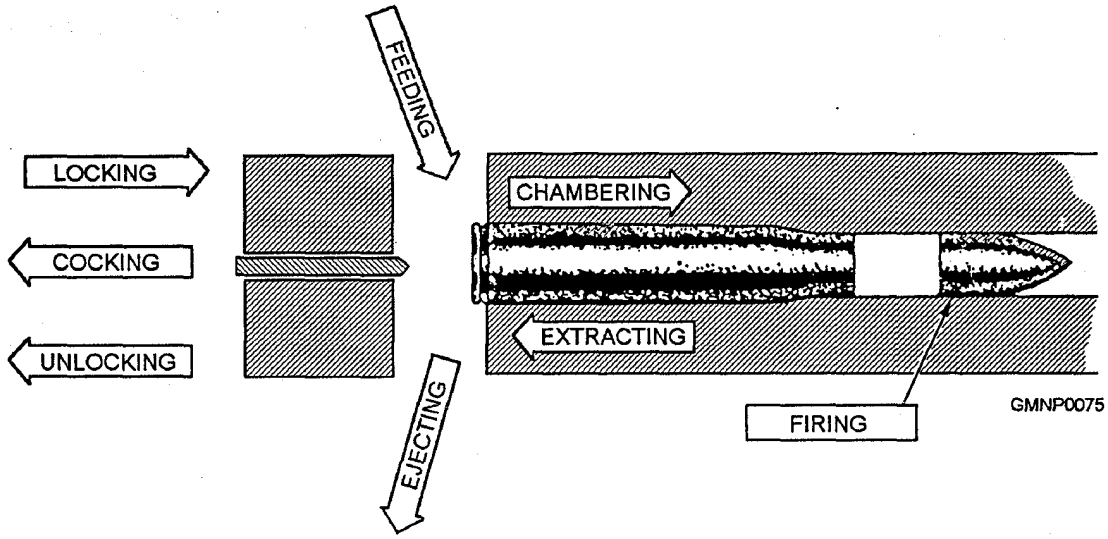

Figure 3-1.—The small-arms cycle of operation.

method is used in the .45-cal. pistol. Another method of accomplishing this step is to incorporate a spring-loaded ejector in the face of the bolt. In this arrangement the case is flipped from the weapon as soon as its forward end clears the chamber. This method is used in the M14 rifle.

Cocking

Cocking is the retraction of the firing mechanism (firing pin and hammer) against spring pressure so that there will be sufficient energy to fire the cartridge in the next cycle of operation. The firing pin, hammer or, in some cases, the bolt itself is held in a cocked position by a piece called the sear.

Firing is initiated by squeezing a trigger. This movement trips the sear, releasing the firing mechanism (firingpin, hammer or, in automatic weapons, such parts as the bolt group or slide), causing it to move forward with enough force to discharge the round.

AUTOMATIC AND SEMIAUTOMATIC FIRING SYSTEMS

LEARNING OBJECTIVE Discuss the operation and maintenance of Navy small arms.

A semiautomatic weapon unlocks, extracts, ejects, cocks, and reloads automatically. However, the trigger must be pulled each time to fire a round. By this definition, the .45-cal. M1911A1 pistol is semiautomatic, though often called automatic. A fully automatic weapon keeps on firing as long as the trigger is kept pulled.

Two examples of weapons that can be fired both automatically and semiautomatically are the 7.62-mm M14 rifle and the 5.56-mm M16 rifle.

SMALL-ARMS OPERATING PRINCIPLES

Automatic and semiautomatic weapons are classified on the basis of how they obtain the energy required for operation. Fundamentally, small arms obtain the energy from the forces that accompany the explosion created when around of ammunition is fired. The use of these forces does not reduce the effectiveness of the weapon but uses otherwise wasted energy.

There are three basic types of operation for semiautomatic and automatic small arms—gas operation, recoil operation, and blowback operation. Figure 3-2 shows the three methods.

Gas Operated

In gas-operated weapons, a portion of the expanding powder gases behind the bullet is tapped off into a gas cylinder located beneath the barrel. (The hole connecting the barrel and cylinder is near the muzzle end.) As the bullet passes this hole, gases push this piston rearward. The piston is connected by a rod to an operating mechanism of the weapon, such as the bolt. The piston carries the bolt aft with it, unlocking, extracting, ejecting, and cocking the weapon.

Three basic types of gas systems are used in semiautomatic and automatic small arms. They are the gas impingement, gas tappet, and gas expansion systems.

GAS IMPINGEMENT SYSTEM.— The impingement system has a negligible volume of gas at the cylinder with expansion dependent on piston motion. As the piston moves, gas continues pouring through the port until the bullet exits the muzzle with a subsequent drop in pressure in the bore. An example of such a mechanism is found in the Ml Garand rifle, which was the standard service rifle in World War II and Korea.

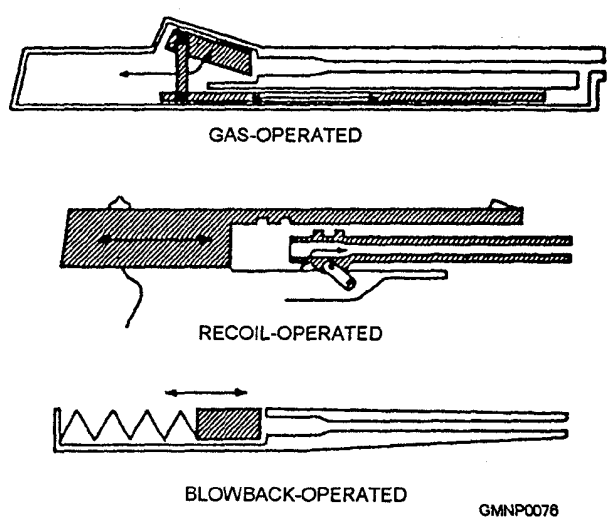

Figure 3-2.—Types of operating systems.

GAS TAPPET SYSTEM.— The gas tappet system is an impingement system with a short piston travel. It is often referred to as a gas short stroke system. An example of such a mechanism is found in the Ml and M1A1 .30-cal. carbine. In some tappet mechanisms, the piston only taps the lock mechanism open and exerts no force to recoiling components.

GAS EXPANSION SYSTEM.— The gas expansion system, in contrast to the impingement system, has an appreciable initial volume of gas in its expansion chamber. This requires more time to pressurize the chamber and also more time to exhaust the gas by selection of port size and location as the required pressurized gas can be drained from the bore.

There is also a cutoff expansion that is similar to the direct expansion system, except for a valve that closes the port after the piston moves. As the pressure builds up to a specific value, the piston moves, closing the port and leaving the gas to expand, providing the force effort needed to operate the moving components. The 7.62-mm M14 rifle uses this type of operation.

Recoil Operated

As a round is fired, high pressures develop behind the bullet and force it down the barrel. The force behind the bullet is also directed rearward against the breech. If the barrel and bolt are secured to one another, the entire force of recoil is felt on the shooter's shoulder. But, by designing the barrel and breech assembly so that they can slide in the frame or receiver, the energy of the rear moving assembly can be used to compress springs, move levers, and soon, necessary to complete the cycle of operation.

Generally, in recoil-operated weapons, the barrel and the bolt move rearward together for a short distance. Then the barrel is stopped and the bolt (now unlocked) continues to the rear against spring pressure until the empty case is ejected. The force of recoil is also used to cock the weapon and compress the spring, returning the bolt to its firing position and cambering a new round in the process.

There are two basic methods of recoil operation for semiautomatic and automatic small arms. They are the long-recoil (Browning) and short-recoil (Maxim) methods.

LONG-RECOIL METHOD.— The dynamics of long-recoil-operated weapons are similar to straight blowback operation, except that the barrel, breechblock, and component parts recoil together for the complete recoil cycle. This recoil distance must be greater than the length of the complete round. At the end of the recoil stroke, the bolt is held while the barrel counterrecoils alone. One particular note of importance on the long-recoil type of operation is that ejection takes place on counterrecoil instead of recoil. An example of a long-recoil weapon is the Browning designed, Remington model 11 shotgun, used by the Navy before and during World War II.

SHORT-RECOIL METHOD.— The dynamics of short-recoil-operated weapons approach those of the retarded blowback types more nearly than long-recoil. The bolt latch is not released until the propellant gases become ineffective to eliminate all blowback tendencies. After unlatching (unlocking), the bolt continues recoiling and in some mechanisms is accelerated by mechanical or gas systems. The barrel is arrested by spring, buffer, stop, or a combination of these and is caused to return to battery by these or the counterrecoiling components. Examples of short-recoil-operated weapons are the .45-cal. pistol and the Browning machine gun.

Blowback Operated

There are some similarities between recoil- and blowback-operated weapons. But there are several major differences. In recoil operation, the bolt and barrel are locked together until the bullet has left the barrel and most of the recoil thrust is spent. The combined thrust of the recoiling barrel, bolt, and some other parts is used to operate the weapon. In blowback (inertia) operation, however, the bolt is not locked to the barrel and, inmost cases, the barrel does not recoil. The bolt is held closed by spring pressure and the mass of the breechblock. The initial blow of the exploding cartridge starts the bolt moving rearward, but the weight of the bolt is such that it does not allow the chamber to be entirely opened until the round has left the bore. Action by a recoil spring returns the bolt to the CLOSED position, cambering a new round.

Thus the weight of the breech bolt is an important factor in the design and operation of a blowback-operated weapon. When used with low-powered ammunition, it is a suitable arrangement. A military rifle, however, using the standard .30-cal. cartridge and the blowback action, would require a 27-pound breechblock.

Besides the submachine gun, many types of so-called pocket automatic pistols and .22-cal. automatic rifles use blowback operations.

There are variants in the methods used for each of these types to operate the mechanism for blowback. These are the straight blowback, retarded blowback, and accelerated blowback methods.

STRAIGHT BLOWBACK METHOD.— Straight blowback is the most elementary and simple. It uses recoil energy from the firing of a round of ammunition to operate the mechanism of the weapon and extract the fired case, eject it against spring tension, and return the mechanism to firing position again. This, in turn, picks up an unfired round from a magazine and chambers it. Straight blowback is used in weapons that fire ammunition of fairly low power, such as pistol ammunition and .22-cal. rimfire rifle cartridges. The bolt slide or breechblock is fairly heavy in these weapons when compared to the weight of the bullet and power of the cartridge. Therefore, the mechanism will stay closed (but not locked) momentarily until the bullet gets free of the barrel and pressure is subdued to allow extraction. All submachine guns and semiautomatic .22-cal. rimfire pistols use straight blowback for their operation.

RETARDED BLOWBACK METHOD.— An example of retarded blowback is found in the mechanism of the original Thompson submachine gun. This is based on the principle of operation that the recoil force exerted on the mechanism must overcome some form of mechanical disadvantage, momentarily holding the breechblock closed until the bullet had cleared the muzzle of the weapon. However, this was later found unnecessary if the bolt or breechbhck was of sufficient weight. The Thompson Ml-Al submachine gun (formerly used by the Navy) uses straight blowback as have all submachine guns designed since that time.

ACCELERATED BLOWBACK METHOD.— An example of accelerated blowback is found in the .22-cal. rimfire Colt Ace semiautomatic pistol. In this pistol, the Williams floating chamber, apart of the barrel on firing a round of ammunition, moves with accelerated force against the mechanism (in this case, the fairly heavy slide and its components), providing sufficient energy to operate the component parts of a .45-cal. pistol with .22-cal. rirnfire ammunition.

Range and Rate of Fire

Some other important terms that apply to small arms describe their range and rate of fire. The range of a weapon is stated in terms of ***maximum range*** and ***maximum effective range. The*** rate of fire of an automatic weapon is stated as the cyclic rate of fire and the sustained rate of fire.

MAXIMUM RANGE.— Maximum range is the greatest distance that the projectile will travel.

MAXIMUM EFFECTIVE RANGE.— Maximum effective range is the greatest distance at which a weapon may be expected to fire accurately to inflict damage or casualties.

CYCLIC RATE OFFIRE.— The cyclic rate of fire is the maximum rate at which a weapon will fire in automatic operation, stated in rounds per minute (rpm).

SUSTAINED RATE OF FIRE.— The sustained rate of fire of a weapon is normally stated in a chart. The chart correlates the average number of rounds fired per minute with the number of minutes this rate can be sustained without damage to the weapon.

HANDGUNS

LEARNING OBJECTIVE Describe the cycle of operation, disassembly, assembly, and safeties of Navy handguns.

Three standard issue handguns are used by the Navy today-the .45-cal. semiautomatic pistol, the 9-mm M9 semiautomatic pistol, and the .38-cal. Smith and Wesson (S&W) revolver. In this section we will provide you with information concerning the description, operation, and maintenance of these three pistols.

M1911A1 .45-CALIBER SEMIAUTOMATIC PISTOL

During the uprising of the Moro tribes in the Philippines during the early 1900s, it was found that the tribesmen often were not stopped when hit by bullets from the .38-cal. side arms then used by American troops. This lack of stopping power was one of the factors that led to the adoption in 1911 of the .45-cal. semiautomatic pistol as the official military side arm.

The .45-cal. semiautomatic pistol was designed and patented by John M. Browning, who was probably the greatest inventor of automatic weapons in the world. The original model 1911 differs only in one detail from the current model 1911A1. The 1911A1 includes an additional safety feature (the grip safety). Other than this, the operation of the two models is identical.

Figure 3-3 shows the pistol with nomenclature for some of the external parts.

The .45-cal. M1911A1 pistol is a recoil-operated, semiautomatic, magazine-fed, self-loading handgun with fixed sights. is often called a .45-cal. semiautomatic pistol (SAP) or a .45-cal. autoloading Colt (the manufacturer) pistol (ACP). This text will refer to it as a .45-cal. pistol.

The magazine holds seven rounds when fully loaded; one round is fired with each squeeze of the trigger. Rifling in the barrel is machined for a left-hand twist (the only Navy weapon with left-hand rifling). Empty, the pistol weighs approximately 2 1/2 pounds. It has a maximum range of a little over 1,600 yards and a maximum effective range of about 50 yards.

Disassembly

Care of the .45-cal. pistol includes daily preventive maintenance, prefiring cleaning, and postfiring cleaning. For daily maintenance the pistol need not be disassembled; but, for the prefiring and postfiring cleaning, the pistol should be disassembled.

There are two phases of disassembly for the pistol—general disassembly (field stripping) and detailed disassembly. General disassembly (fig. 3-4) is necessary for normal care and cleaning and after the weapon has been fired. This is the extent of disassembly that is generally explained to personnel, such as watch standers. The detailed disassembly of the receiver group (fig. 3-5) is the job of the Gunner's Mate during periodic cleaning and repair. Detailed disassembly is not currently called for in any 3-M Systems MRCs. However, it is a very good idea to perform a detailed disassembly and cleaning after heavy use, such as security force range qualifications.

To do a good job of cleaning and repairing the weapon, you must know the names of the parts. The nomenclature of the parts of the pistol should be learned while practicing disassembly and assembly. As each

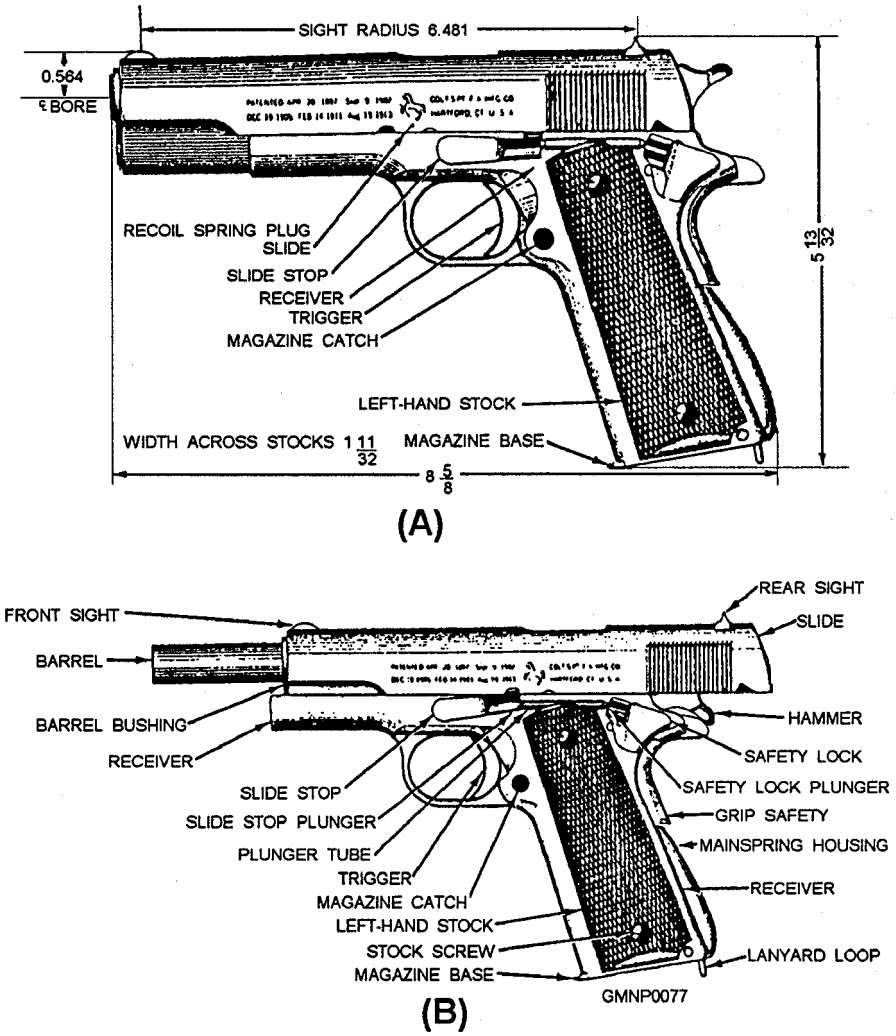

Figure 3-3.—.45-cal. M1911A1 semiautomatic pistol: (A) Slide closed; (B) Slide open.

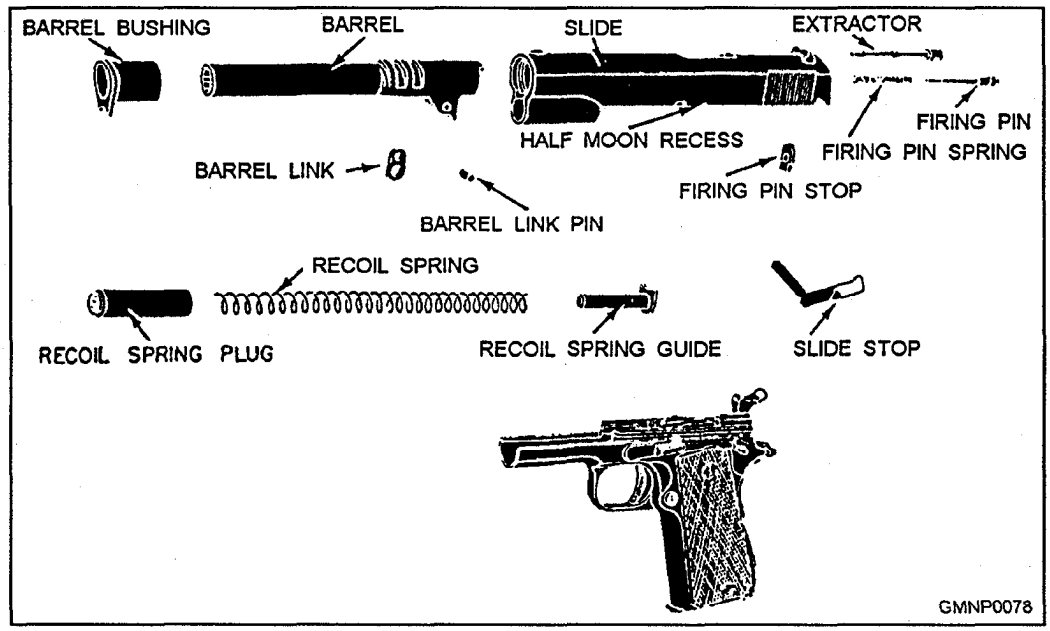

Figure 3-4.—A field stripped .45-cal. pistol.

part is removed and replaced, the nomenclature is repeated until known. While studying the disassembly arid assembly of the pistol, refer to the illustration showing the parts by name and description (fig. 3-5). Become thoroughly familiar with the parts and their functions. Knowing the names of the parts will also help you understand the operation of the weapon.

GENERAL DISASSEMBLY (FIELD STRIPPING).— Before performing work on any weapon, you should make sure the weapon is clear of ammunition. On the M191lA1 this is accomplished by removing the magazine, pulling the slide to the rear, and inspecting the chamber. Then perform the following steps:

1. Cock the hammer and put the safety lock in its UP (safe) position. Depress the recoil spring plug and turn the barrel bushing about one-quarter turn clockwise. This releases the tension on the spring. Allow the spring to expand slowly, under control, to prevent injuiy o; loss 0} parts. ll-rn the recoil spring plug counterclockwise and remove it from the recoil spring. Move the safety lock back down to its FIRE position.

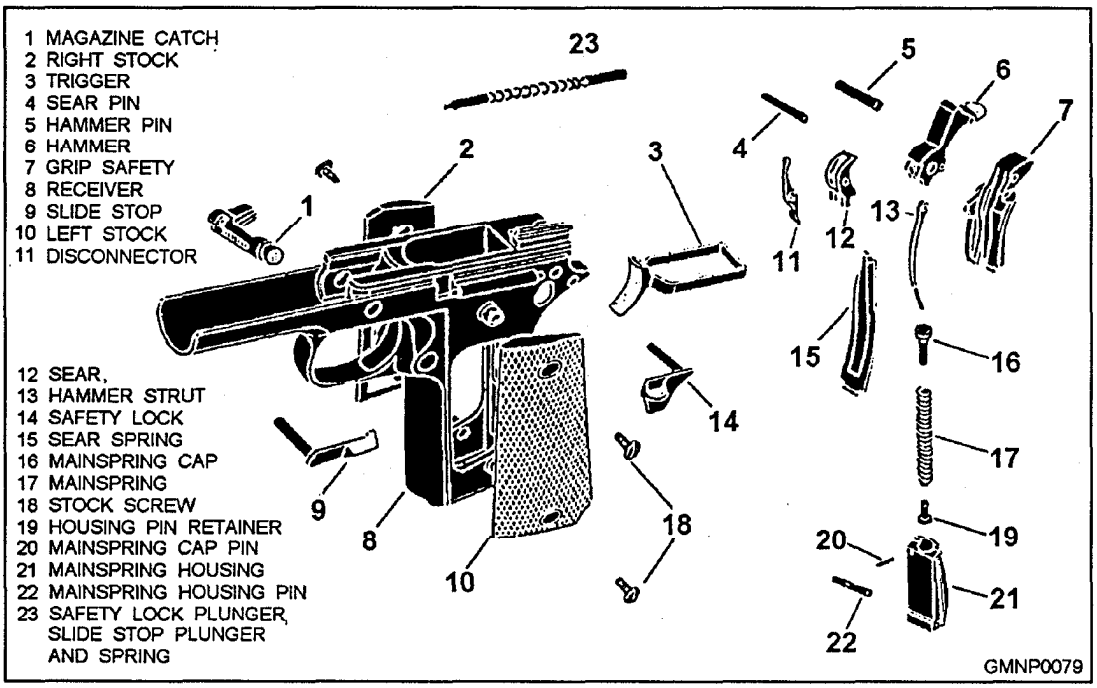

Figure 3-5.—Detailed receiver disassembly of the .45-cal. pistol.

2. Draw the slide to the rear until the half-moon recess (on the slide) is directly above the projection on the slide stop. Push out the slide stop from right to left.

3. Turn the pistol upside down and draw the receiver to the rear, disengaging it from the slide. Lay the receiver down.

4. Draw the recoil spring and its guide to the rear and out of the slide.

5. Take the barrel bushing out of the slide by turning it counterclockwise as far as it will go, then lifting up.

6. Lay the barrel link forward and pull the barrel out of the muzzle end of the slide.

7. Takeout the firing pin by pressing on the rear of the firing pin with any pointed object until you can slide out the firing pin stop. Keep your fingers over the firing pin, allowing the spring tension to ease; then lift both firing pin and spring from the slide.

8. Pry the extractor out of the rear of the slide.

DETAILED DISASSEMBLY OF THE RECEIVER GROUP.— Disassembly of the receiver group into its individual parts, as shown in figure 3-5, is done as follows:

1. The hammer should be in its cocked position. Move the safety lockup and down and, at the same time, pull it outward from the receiver. (Do not use any tool to pry the stop out.) With the safety lock removed, squeeze the trigger, and allow the hammer to ease forward.

2. Remove the mainspring housing pin. This step requires a good deal of force, so the receiver must be placed on a sturdy supporting surface. The end of the safety lockpin cart be used to push the mainspring housing pin out.

3. Remove the mainspring housing. Take out the grip safety and the sear spring.

4. Using a driftpin, punch out the hammer pin; then lift the hammer from the receiver.

5. Drift out the sear pin from right to left, and let the sear and disconnector drop out into your hand.

6. Press the magazine catch in until it is flush with the left side of the receiver. Then, using a suitable screwdriver, turn the magazine catch lock one-quarter turn counterclockwise. Lift the magazine catch from the right side of the receiver.

7. Remove the trigger from the rear of the receiver.

8. Remove the four stock screws and the left and right stocks.

Assembly

Assembly of the weapon is also covered in two phases. First, the receiver group is assembled. At the end of this phase the weapon is in a field stripped condition. Then the field stripped weapon is assembled.

Both phases of assembly are done by performing the disassembly procedures in reverse order. Here are four hints that should be helpful in assembling the pistol:

1. All the pins go in from left to right.

2. Place the sear and disconnector in as one unit, fitted together, as shown in figure 3-6.

3. When you place the sear spring in position, have the mainspring housing ready to slide up about three quarters of the way into the receiver to hold the spring in place.

4. Make sure the hammer strut is actually fitting well down into the mainspring cap before sliding the mainspring housing into place. (Sometimes the hammer strut will catch on top of the cap instead of properly seating in the recess of the cap.)

Safeties

Three safety features and one positive safety are on the .45-cal. pistol. The three safety features are the half-cock notch, the grip safety, and the disconnector. The positive safety is the safety lock (sometimes called the thumb safe).

The safety lock positively locks the slide in the forward position. In addition, a stud on the safety lock

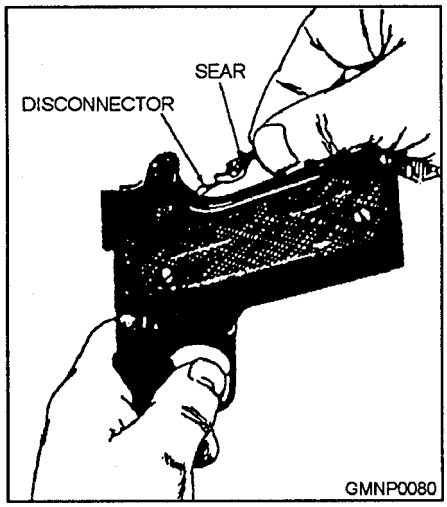

Figure 3-6.—Replacing the sear and disconnector.

(fig. 3-7, view A) blocks the shoulders of the sear to prevent any movement of the sear out of the full-cock notch of the hammer.

The half-cock notch is the notch just above the full-cock notch. It has a lip that prevents movement of the sear from that notch when pressure is applied to the trigger. (See fig. 3-7, view B.)

The grip safety (fig. 3-7, view C) indirectly stops any movement of the sear by blocking the trigger movement. If the trigger cannot be actuated, the sear cannot move and the hammer will not fall.

The disconnector and sear (fig. 3-7, view D) prevents firing unless the slide is fully forward and locked. Anytime the slide is not fully forward, the nose of the disconnector is forced downward. In this condition the disconnector spade does not contact the sear when the trigger is pulled. When the trigger is pulled, the disconnector will be pushed to the rear; but the sear remains in position, holding the hammer to the rear.

When the slide is forward, the disconnector rides up into a recess on the underside of the slide. The spade of the disconnector (dark area) bears against lugs on the sear. When the trigger is pulled, the trigger yoke pushes back against the disconnector spade, which transmits the motion to the sear, rotating the sear nose out on the full-cock notch of the hammer, and the weapon fires.

Cycle of Operation

Refer to figures 3-3,3-4, and 3-5 as we explain the functions of the pistol. We will assume that a loaded magazine is in the weapon, a round is in the chamber, the grip safety is depressed, the trigger has been squeezed, and the round fired. The cycle of operation now begins.

As the gases from the burned powder expand, the bullet is forced down the barrel while the same force is directed rearward against the slide. The slide and barrel are locked together at this point, and both are forced aft. The barrel link is pinned to the receiver by the slide stop shaft and to the barrel by the barrel link pin. As the barrel moves rearward, it pivots on the slide stop shaft and is moved downward as well as to the rear. As the barrel locking ribs are disengaged from the recesses in the slide, unlocking is completed.

As the slide moves aft in recoil, the extractor pulls the empty case along with it. Extraction is completed when the cartridge clears the chamber.

Ejection occurs when the cartridge strikes the stationary ejector, pivots on the extractor, and flips from the weapon through the ejection port.

Cocking begins as soon as the slide started its recoil movement. The hammer is moved rearward and the hammer strut is pushed down against the mainspring,

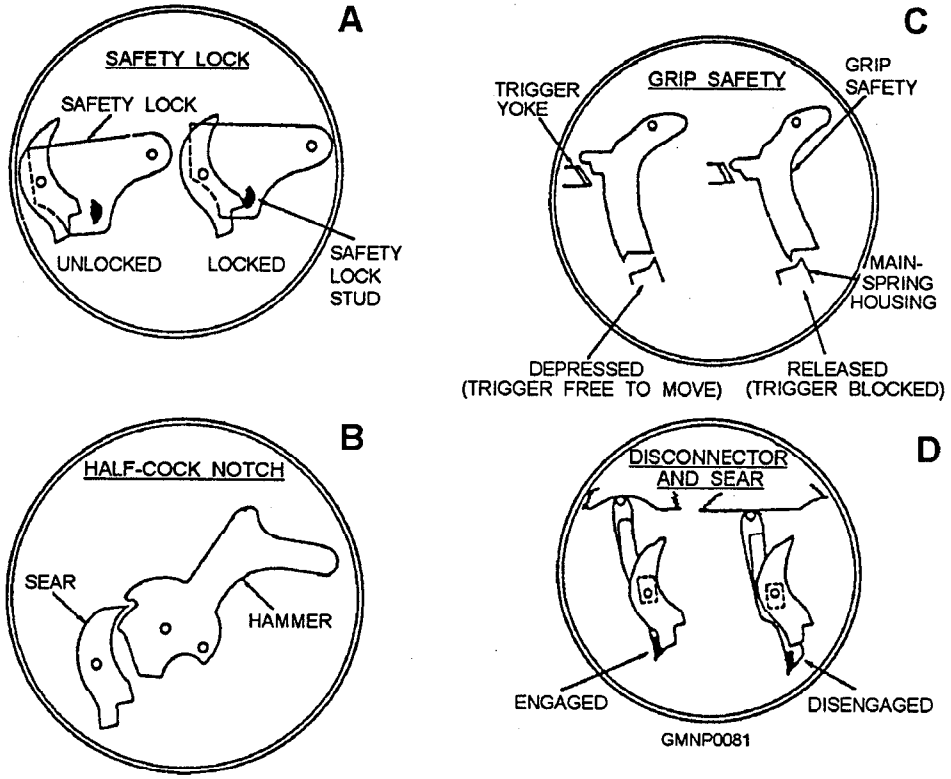

Figure 3-7.—Safeties on the .45-cal. pistol.

compressing it. When the slide strikes the recoil spring guide collar, its rearward movement is stopped. The recoil spring then causes the slide to begin its forward movement. The hammer follows the slide for a short distance. Then the sear, which bears against the hammer through the action of the sear spring, enters the full-cock notch of the hammer and holds it in a cocked position. Feeding starts as soon as the slide, moving to the rear, clears the top of the magazine. The magazine follower, under pressure from the magazine spring, forces the top round against the lips of the magazine. This places the top cartridge in position to be picked up by the face of the slide during its forward movement.

Cambering occurs when the forward moving slide pushes a new round into the chamber. As the bullet is pushed up the ramp into the chamber, the base of the cartridge slides up the face of the slide. As this happens the groove on the base of the cartridge is engaged by the hooked extractor.

After cambering, the slide continues forward a small distance, pushing the barrel ahead of it. As the barrel moves, it pivots up and forward on the barrel link. The locking ribs on the barrel enter the locking recesses in the slide, thereby locking the two together.

Firing will start the cycle all over again. When the grip safety is depressed and the trigger is squeezed, the trigger yoke presses against the disconnector, which pushes aft on the sear. The sear rotates on its pin, disengaging from the notch on the hammer. The mainspring pushes up on the hammers strut, roataing the hammer forward. The hammer strikes the firing pin which, in turn, strikes the cartridge primer.

For more information on the M1911A1 .45-cal. pistol, refer to U.S. Army TM 9-1005-211-12.

9-MM M9 SEMIAUTOMATIC PISTOL

The 9-mm M9 pistol (fig. 3-8) is a single- or double-action, short-recoil-operated, semiautomatic, magazine-fed, self-loading handgun with fixed sights. The M9 is primarily designed as a personal defense side arm for guards, sentries, and boarding and landing parties.

The M9 is chambered for the 9-mm cartridge. The magazine (fig. 3-9) is a staggered, steel constructed, aluminum follower and removable floor plate. It has a capacity of 15 rounds, which is more than double the traditional single-line magazine of the same length. Empty, the pistol weighs approximately 2.1 pounds. It has a maximum range of 1,962.2 yards (1,800 meters) and a maximum effective range of 54.7 yards (50 meters).

Operation

The M9 pistol has a short recoil system, using a falling locking block. The pressure delveloped by the expanding gases of a fired round recoils the slide and barrel assembly. After a short distance, the locking block is disengaged from the slide, the barrrel stops against the frame, and the slide continues its rearward

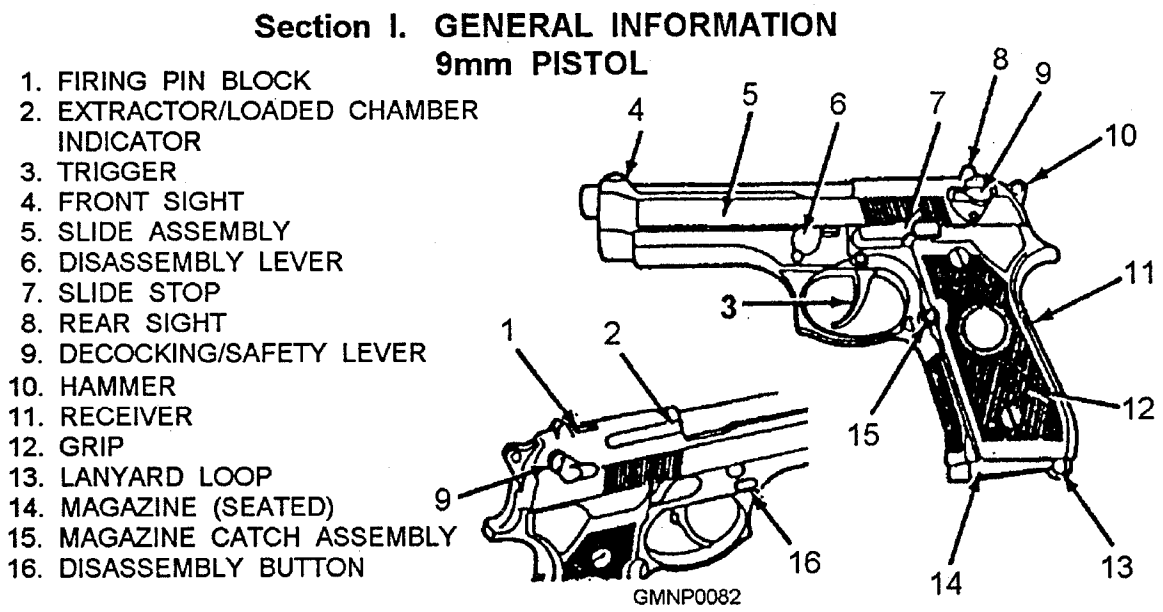

Figure 3-8.—9-mm M9 semiautomatic pistol.

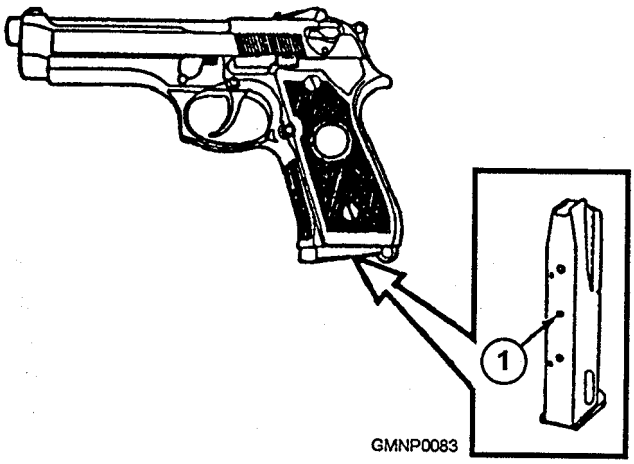

Figure 3-9.—M9) magazine.

movement. The slide then extracts and ejects the fired cartridge case, cocks the hammer, and compresses the recoil spring. The slide moves forward, stripping the next cartridge from the magazine, and feeds it into the chamber. After the last cartridge has been fired and ejected, the slide and barrel assembly will remain open by the magazine follower pressing up on the slide stop lever.

Disassembly

Disassembly of the M9 is to be conducted according to the current 3-M Systems MRCs. Detailed disassembly is not normally conducted by the GM armorer. General disassembly (field stripping) will only be discussed in this section. A detailed disassembly, as shown in figure 3-10

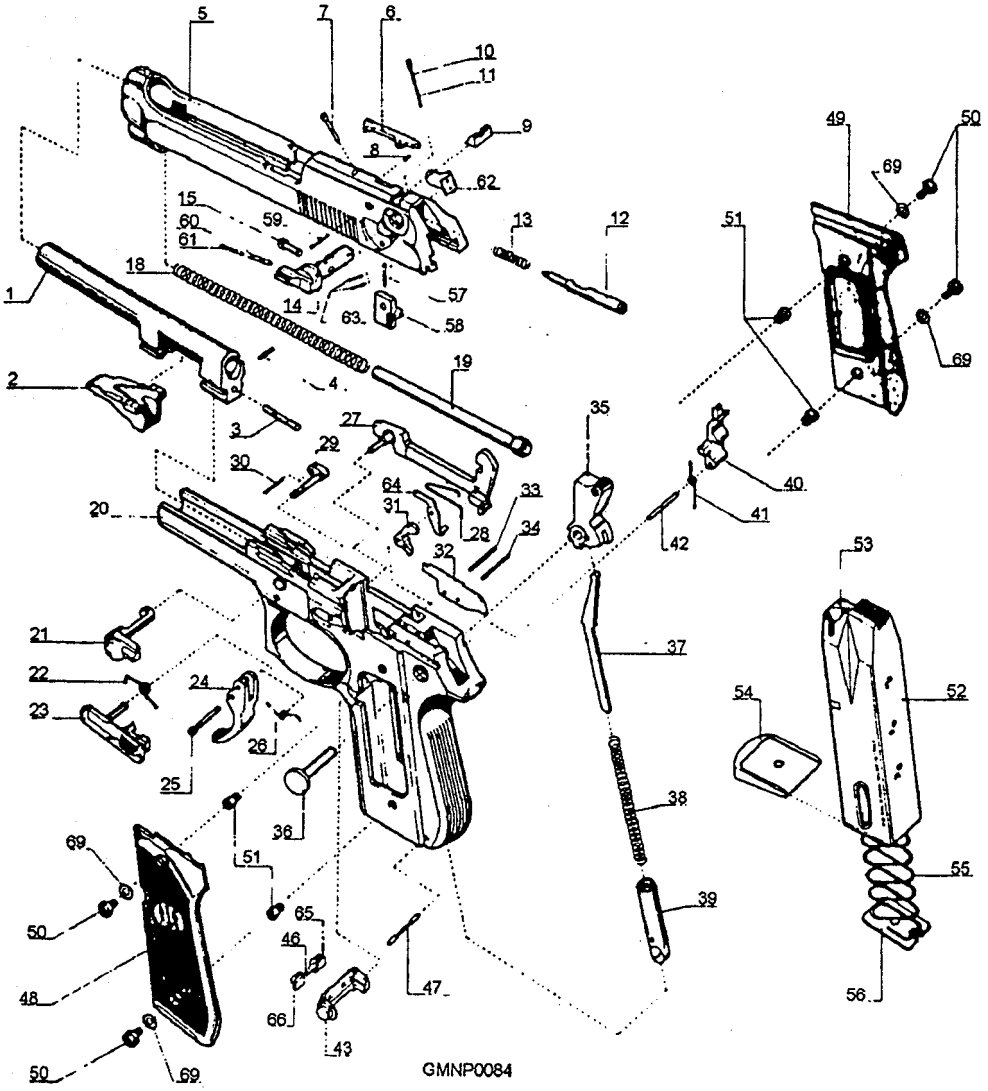

Figure 3-10.—Detailed disassembly of the 9-mm M9 pistol.

Table 3-1.—Part Number Nomenclature

Part #	Nomenclature	Part #	Nomenclature
1	Barrel (Factory Fitting Required)	34	Ejector Spring Pin
2	Locking Block	35	Hammer
3	Locking Block Plunger	36	Hammer Pin
4	Locking Block Plunger – Retaining Pin	37	Hammer Spring Guide
5	Slide (Factory Fitting Required)	38	Hammer Spring
6	Extractor	39	Hammer Spring Cap
7	Extractor Pin	40	Sear
8	Extractor Spring	41	Sear Spring
9	Rear Sight (Fitting Required)	42	Sear Pin
10	Trigger Bar Release Plunger	43	Magazine Release
11	Trigger Bar Release Plunger Spring	46	Magazine Release Button Spring
12	Firing Pin	47	Hammer Spring Cap Pin
13	Firing Pin Spring	48/49P	Grips (Plastic) Pair
14	Safety	48/49W	Grips (Wood) Pair
15	Firing Pin Plunger	50	Grip Screw
18	Recoil Spring	51	Grip Bush
19	Recoil Spring Guide	52	Magazine Box
20	Frame	53	Magazine Follower
21	Disassembling Latch	54	Magazine Bottom
22	Slide Catch Spring	55	Magazine Spring
23	Slide Catch	56	Magazine Lock Plate
24	Trigger	57	Firing Pin Catch Spring
25	Trigger Pin	58	Firing Pin Catch
26	Trigger Spring	59	Firing Pin Catch Retaining Spring Pin
27	Trigger Bar	60	Safety Plunger Spring
28	Trigger Bar Spring	61	Safety Plunger
29	Disassembling Latch Release Button	62	Right Safety Lever
30	Disassembling Latch Release Button	63	Right Safety Lever Spring Pin
31	Hammer Release Lever	64	Firing Pin Catch Lever
32	Ejector	65	Magazine Catch Spring Bush (Short)
33	Hammer Release Lever Pin	66	Magazine Catch Spring Bush (Long)
		69	Spring Washer

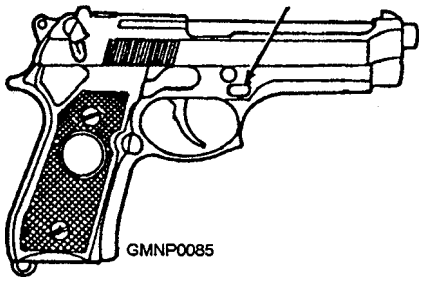

Figure 3-11.—disassembly lever release button.

and table 3-1, is shown for parts identification.

The M9 is designed for ease of field stripping under adverse conditions. With practice, field stripping can be performed in seconds. Ensure that the magazine is removed and the pistol is unloaded. The pistol can be disassembled and assembled with the safety in the ON or OFF position. For safety, and to prevent damage to the pistol, always engage the safety (ON position, warning dots covered, DOWN position) before disassembly and assembly.

To field-strip the M9, hold the pistol in the right hand with the muzzle slightly elevated. With the forefinger, press the disassembly lever release button (fig. 3-11), and with the thumb, rotate the disassembly lever (fig. 3-12) downward until it stops. Pull the slide and barrel assembly (fig. 3-13) forward and remove it from the receiver assembly.

WARNING

Care should be used when removing the recoil spring and spring guide. Because of the amount of compression, the assembly will be released under spring tension and could cause possible injury to personnel, or become damaged or lost.

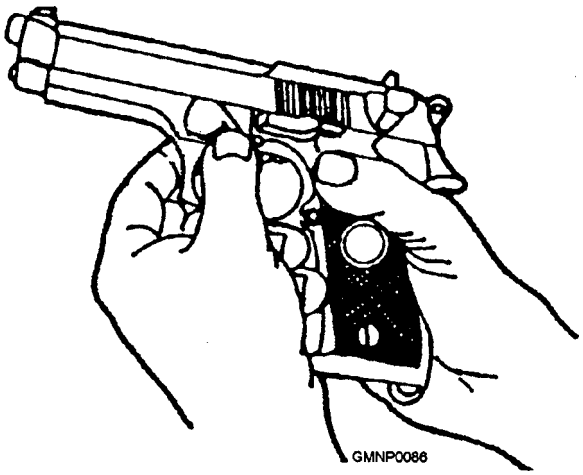

Figure 3-12.—Disassembly lever.

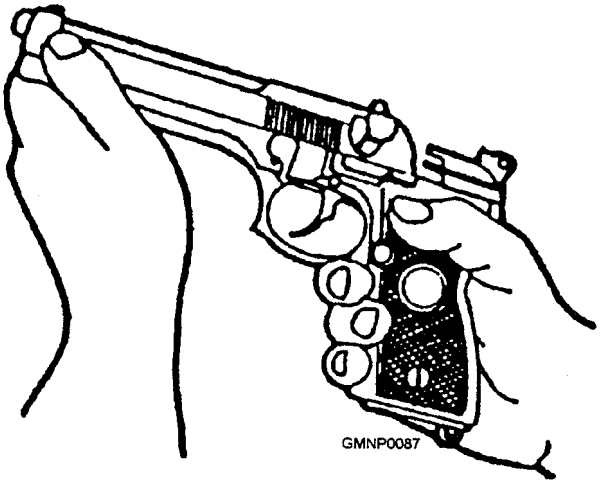

Figure 3-13.—Removal of slide and barrel assembly.

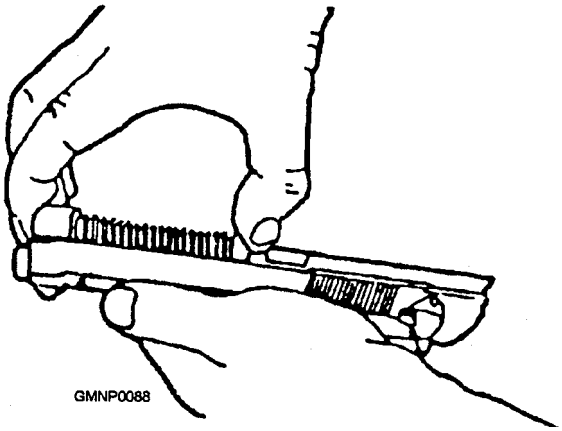

Figure 3-14.—Compressing the recoil spring.

Firmly hold the slide in the palm of one hand and slightly compress the recoil spring and spring guide (fig. 3-14), while at the same time lifting and removing the recoil spring and spring guide (fig. 3-15). Care should be taken to allow the spring tension to be released. After the spring tension is released, separate the recoil spring from the spring guide (fig. 3-16).

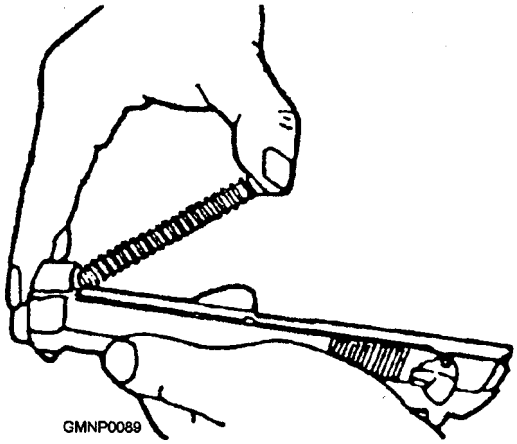

Figure 3-15.—Removing the recoil spring and spring guide.

Figure 3-16.—Recoil spring and spring guide.

To remove the barrel from the slide, push in on the locking block plunger (fig. 3-17) while pushing the barrel forward slightly. Lift and remove the locking block and the barrel assembly from the slide.

Once the pistol is disassembled, look for worn or damaged parts while cleaning and before assembly. For more information on the M9 pistol, refer to Navy SW 370-AA-OPI-010/9mm.

THE .38-CALIBER REVOLVER

You will find the .38-cal. S&W revolver (fig. 3-18) in some ships and ashore armories where it is used by personnel assigned to guard or police duties. Because it is lighter than the .45-cal. pistol, the .38-cal. revolver is frequently issued by flight personnel. This weapon has about the same maximum and effective ranges (1,600 and 50 yards, respectively) as the .45-cal. pistol. Figure 3-19 shows the revolver disassembled to the extent usually required for normal care.

Operation

In this discussion, operation of the revolver is limited to loading, firing, and unloading. To load the revolver, swing the cylinder out by pushing forward on the thumbpiece and applying a little pressure on the right side of the cylinder. The thumbpiece will not release the cylinder if the hammer is cocked

NOTE

The cylinder should not be flipped out sharply because this can cause the crane to be bent, throwing the cylinder out of timing and/or alignment.

Insert a round in each of the six chambers of the cylinder and swing the cylinder back into position. The weapon is now loaded and ready to be fired.

This revolver can be fired by single or double action. For single-action firing, the hammer is pulled back with the thumb to the full-cock position for each round. This

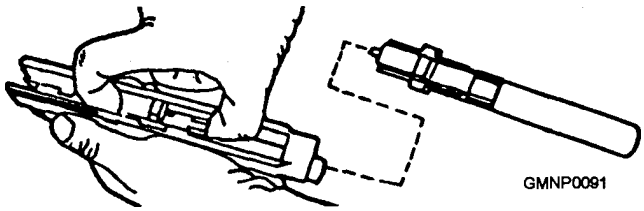

Figure 3-17.—Removing the barrel from the slide.

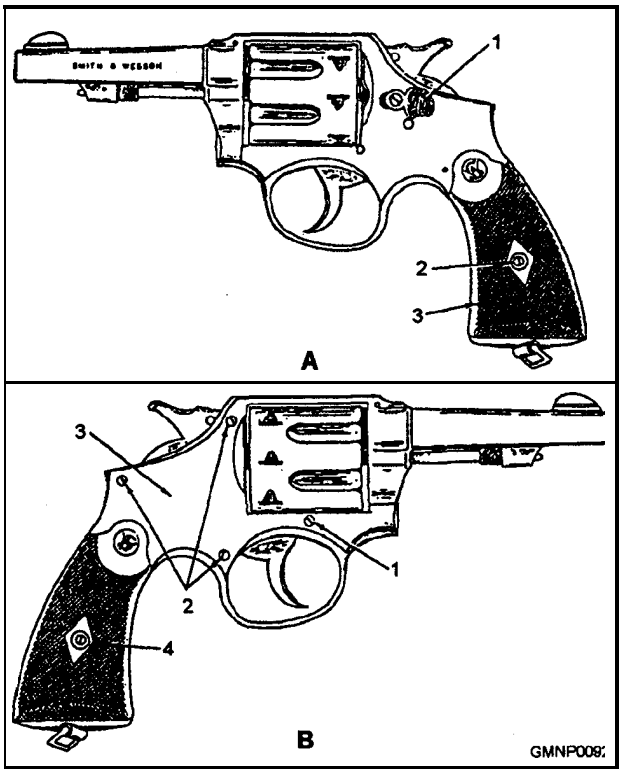

Figure 3-18.—.38-cal. special Smith and Wesson revolver: A. Left side—(1) thumbpiece (cylinder release), (2) stock screw, (3) stock, B. Right side—(1 and 2) side-plate screws, (3) side plate, (4) stock.

action also rotates the cylinder. The hammer is held in the cocked position by the sear until released by the trigger. In double-action firing, pulling the trigger causes the hammer to be raised to nearly its full-cock position. The hammer strut will then escape the trigger, and the spring-loaded hammer will fall and strike the cartridge. In double-action firing, the cylinder is rotated by pulling the trigger. Since it requires considerably less trigger pull for single action, this method should produce better accuracy.

The empty cartridges are ejected by swinging out the cylinder to the left and pushing the ejector plunger toward the rear of the cylinder. There are two built-in safeties on this revolver—the hammer block and the rebound slide. 'The hammer block prevents the hammer from going far enough forward to strike the cartridge primer when both the hammer and the trigger are in the forward or uncocked position. Thus, if the revolver were dropped or otherwise struck on the hammer, the round would not be freed. The rebound slide actuates the hammer block to prevent the hammer from traveling far enough to strike the primer should the hammer slip from the thumb while being manully cocked.

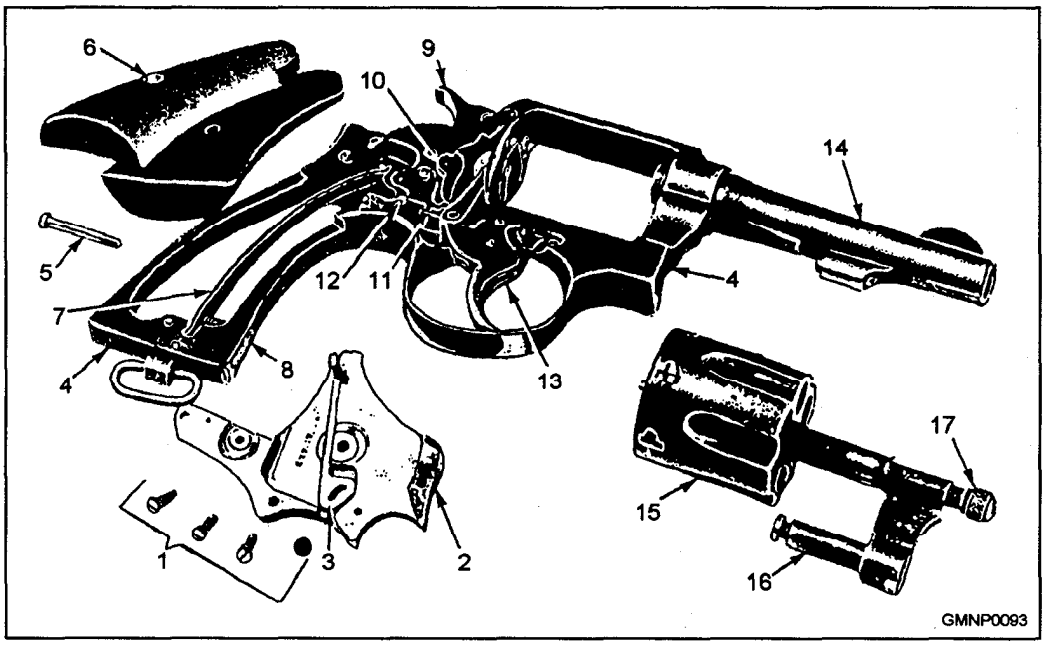

1. Side-plate screws
2. Side plate
3. Hammer block
4. Frame
5. Stock screw
6. Stocks
7. Mainspring
8. Mainspring strain screw
9. Hammer
10. Sear
11. Rebound slide
12. Hammer block pin
13. Trigger
14. Barrel
15. Cylinder
16. Crane or yoke
17. Ejector plunger

Figure 3-19.—.38-cal. Smith and Wesson revolver, completely disassembled.

Disassembly and Assembly

To disassemble the revolver, do the following:

1. Remove the stock screws and liftoff the stocks. (See fig. 3-18.)

2. Push forward on the thumbpiece (No. 1 in fig. 3-18, view A), which actuates the cylinder latch, and swing the cylinder out to the left. With a small screwdriver, remove the side-plate screw (No. 1 in fig. 3-18, view B) located directly under the cylinder. This screw retains the crane (or yoke) of the cylinder and ejector group.

3. Remove the cylinder and ejector group by pulling the ejector forward.

4. Remove the three remaining side-plate screws (No. 2 in fig. 3-18, view B).

5. Remove the side plate. (Do not use excessive force.)

6. If the revolver has a hammer block that fits over a pin in the rebound slide, remove the hammer block If the revolver has the type of hammer block that is staked to the side plate (early models), removal is not required.

To reassemble the weapon, if the hammer block has been removed, place the hole in the hammer block over the hammer block pin (No. 12 in fig. 3-19) so that the L projection of the hammer block will fit between the hammer and the frame. Assemble the side plate, making sure the hammer block fits in the recess in the side plate (do not force). Install the remaining parts, following the reverse order of disassembly.

For further information on the .38-cal. revolver, refer to the U.S. Army TM 9-1005-206-14&P-l.

SHOULDER WEAPONS

LEARNING OBJECTIVE Discuss the controls, safeties, and maintenance of shoulder weapons used by the U.S. Navy.

Shoulder weapons are designed to be held with both hands; they are braced against the shoulder to absorb the force of recoil and to improve accuracy. Included in this group are the M14 and M16 rifles.

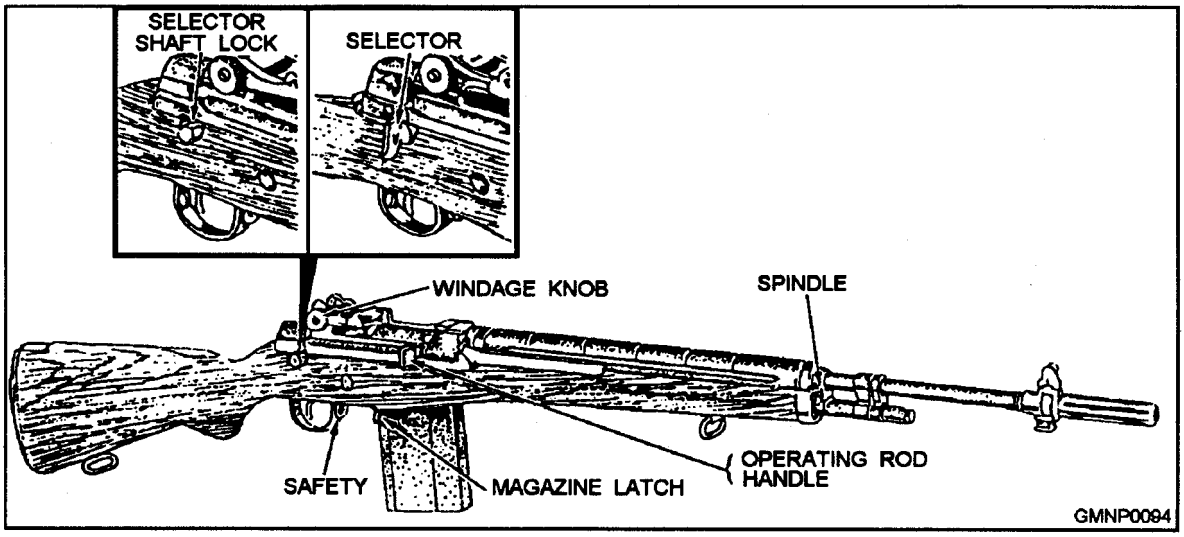

Figure 3-20.—7.62-mm M14 rifle and controls—right-front view.

M14 RIFLE

The M14 rifle (fig. 3-20) is a lightweight air-cooled, gas-operated, magazine-fed shoulder weapon. It is designed for semiautomatic or fully automatic fire at the cyclic rate of 750 rounds per minute. The rifle is chambered for 7.62-mm cartridges. It is designed to accommodate a 20-round cartridge magazine, the M2 rifle bipod (fig. 3-21), and the M6 bayonet (fig. 3-22).

M14 Rifle Controls

Figure 3-23 shows an M14 rifle equipped with a selector for automatic operation. Position the selector as shown in view A for semiautomatic fire and as shown in view B for automatic fire. In firing for semiautomatic fire, squeeze the trigger for each round fired For automatic fire, squeeze the trigger and hold. Most of the M14 rifles issued to the Navy will not be equipped with the automatic selector, only semiautomatic fire will be possible.

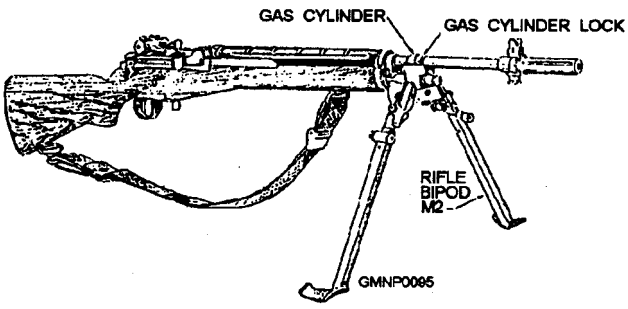

Figure 3-21.—7.62-mm M14 rifle with the bipod installed.

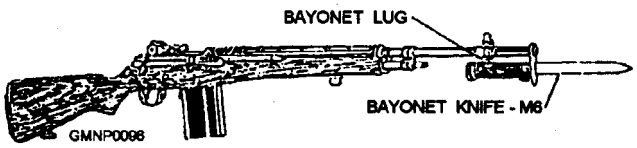

Figure 3-22.—7.62-mm M14 rifle with the M6 bayonet knife.

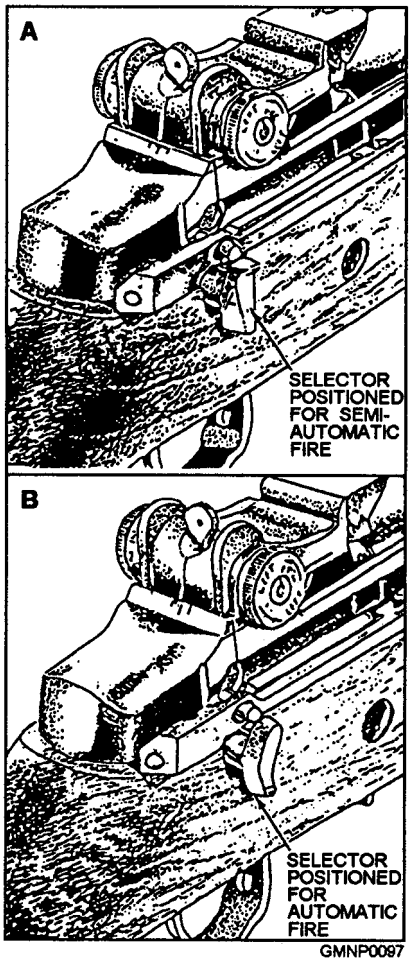

Figure 3-23.—Selector for semiautomatic and automatic fire.

The location of the safety is just forward of the trigger guard. To prevent firing, press the safety back from in front of the trigger guard. To permit firing, press it forward from inside the trigger guard. The safety can only be engaged when the weapon is cocked.

If a magazine is in the rifle, press the magazine latch (fig. 3-24) and remove the magazine. Pull the operating handle all the way to the rear and check to see that the weapon is free of ammunition. Then ease the operating rod forward to the locked position and move the safety to the rear (SAFE position).

There are two methods of reloading an empty magazine. Figure 3-25 shows the method with the magazine in the rifle. (This method should only be used in the field since it creates a possible accidental firing situation.) After the last round is fried from a magazine, the magazine follower will engage the bolt lock and hold the bolt in the rear position. If this fails to happen, make sure you did not have a misfire, then pull the operating handle to the rear and manually depress the bolt lock (located on the left side of the receiver), ease the bolt down against it, then engage the safety. Insert a 5-round clip into the cartridge clip guide, as shown in figure 3-25, and push the cartridges down into the magazine. Four 5-round clips will fully load a magazine. After the last clip is loaded and the clip removed, pull the operating handle to the rear to release the bolt lock and then release the handle. This will let the bolt go into battery, stripping and feeding the top round into the chamber. The weapon is now ready to fire.

The safest way to reload a magazine is shown in figure 3-26. Each bandolier containing the 5-round clips also contains a magazine loading tool. Insert the tool over the top rear of the magazine, as shown in figure 3-26, insert a 5-round clip into the loading tool, and press the cartridges into the magazine.

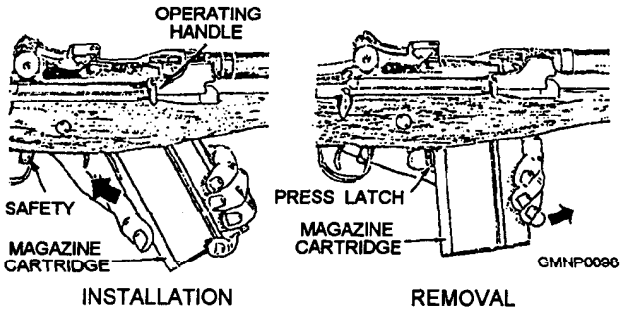

Ftgure 3-24.—Installation and removal of magazine.

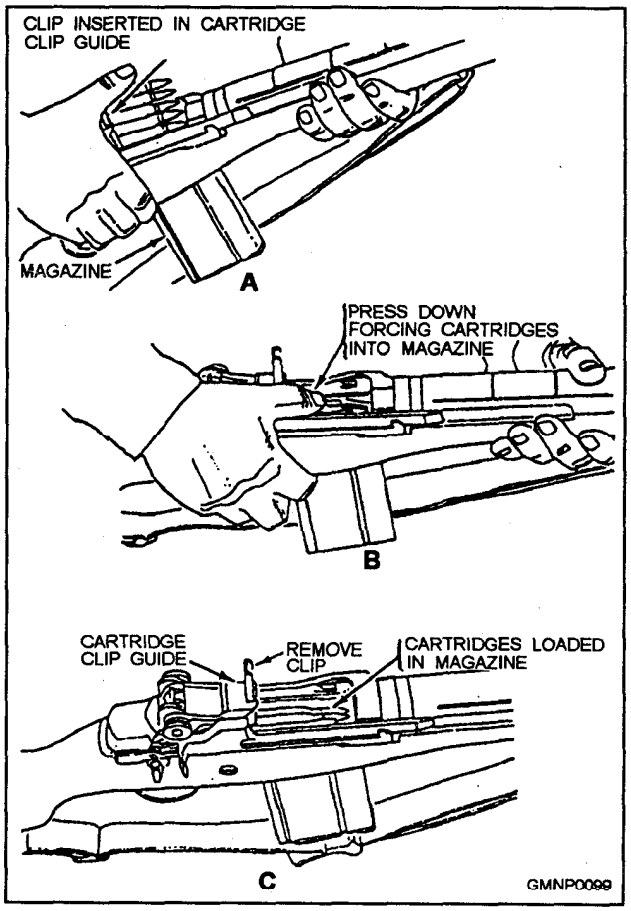

Figure 3-25.—Loading magazine through cartridge clip guide.

To load a full magazine into a rifle, insert the front end of the loaded magazine well into the front catch until the front catch snaps into engagement, then pull rearward and upward until the magazine latch locks the magazine into position (fig. 3-24).

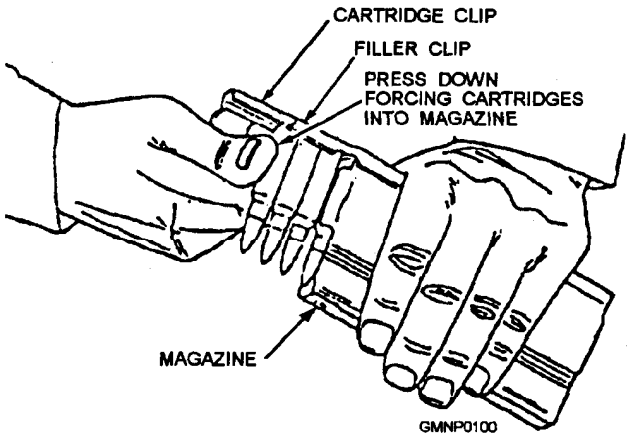

Figure 3-26.—Loading magazine with a loading tool.

The gas spindle valve (fig. 3-27) controls the gases used in firing the rifle. When the slot of the spindle valve is in the vertical or ON position (upper view), the valve is open and directs gases to the operating piston for ordinary functioning of the rifle. When the slot is in the horizontal or OFF position (lower view), the spindle valve is closed. This permits the full pressure of the gas to be used in propelling a rifle grenade or line-throwing projectile.

The rear sight controls consist of a windage knob and pinion assembly. (See fig. 3-20.) The function of the windage knob is to adjust the sight laterally. To move the sight to the right, turn the knob clockwise; to the left, counterclockwise. The pinion assembly adjusts the sight aperture vertically. Turn the pinion clockwise to raise, counterclockwise to lower.

Firing the M14 Rifle

If the command does not desire automatic fire,, the selector on your rifle will be removed and a selector shaft lock is (see fig. 3-20) inserted so that the rifle is capable only of semiautomatic fire.

For a rifle equipped with a selector shaft lock, simply push the safety forward and then fire a round with each squeeze of the trigger.

For semiautomatic fire on a rifle equipped with a selector, position the selector for semiautomatic fire and then fire a round with each squeeze of the trigger.

For automatic fire with a selector (rifle cocked), proceed as follows:

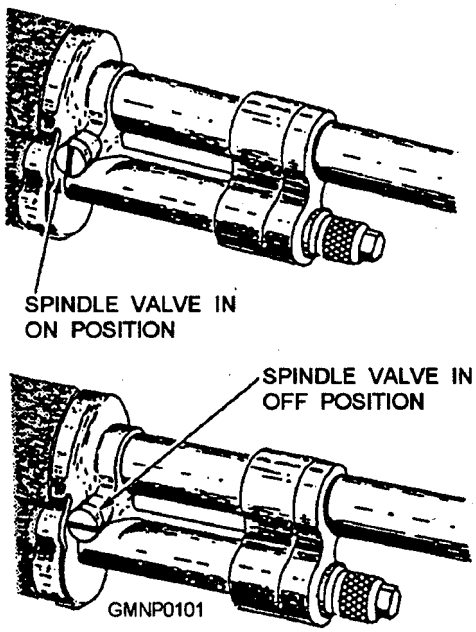

Figure 3-27.—Gas spindle valve in the ON and OFF positions.

1. Position the selector for automatic free.

2. Push the safety forward.

3. Squeeze the trigger. The rifle will fire automatically as long as the trigger is squeezed and there is ammunition in the magazine. Release the trigger to cease firing.

4. After the last round is fired, the magazine follower (a spring-driven plate in the magazine that forces cartridges upward as rounds are expended and cases ejected) actuates the bolt lock, locking the bolt in the rearward position. When an empty magazine is removed and a loaded one inserted, release the bolt lock by retracting the operating rod, thereby drawing the bolt rearward, then close the bolt. As the bolt assembly is closed, the top cartridge in the magazine is pushed forward into the chamber.

Unloading the M14 Rifle

To unload the M14 rifle, proceed as follows:

1. Push the safety to the SAFE (back) position.

2. Grasp the magazine with your thumb on the magazine latch, and squeeze the latch to release it. Push the magazine forward and downward to disengage it from the front catch, and then remove it from the magazine well, as shown in the right-hand view of figure 3-24.

3. Pull the operating rod handle all the way to the rear and lock it, using the bolt catch.

4. Inspect the chamber to make sure it is clear.

The rifle is clear only when no round is in the chamber, the magazine is out, the safety is set (to the rear), and the bolt is in the REAR position.

Field Stripping the M14 Rifle

Figure 3-28 shows how the M14 rifle breaks down into seven group assemblies. You should be able to disassemble the rifle to this extent for cleaning, lubrication, and maintenance. This procedure is called field stripping the rifle. The names of the numbered group assemblies shown in figure 3-28 areas follows:

1. Magazine
2. Firing mechanism
3. Stock with butt plate assembly
4. Handguard assembly
5. Operating rod and connector group

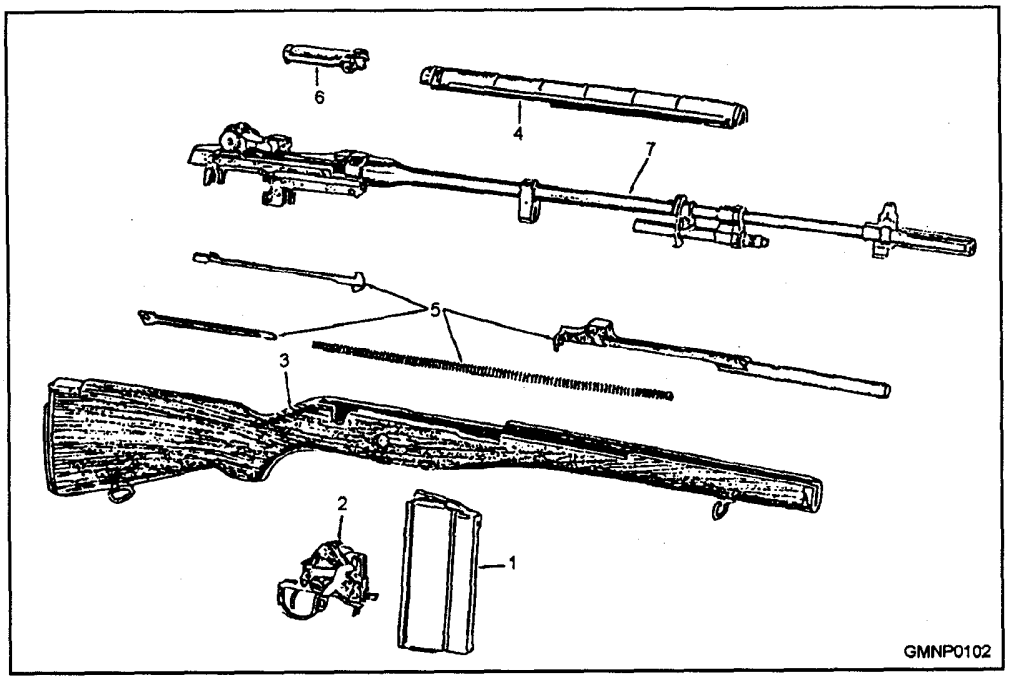

Figure 3-28.—Group assemblies of the M14 rifle.

6. Bolt assembly

7. Barrel and receiver group

To withdraw the firing mechanism (No. 2 in fig. 3-28) from the stock, proceed as follows:

1. Remove the magazine.

2. Place the safety in the SAFE position after making sure the rifle is cocked.

3. Disengage the hooked end of the trigger guard from the firing mechanism housing.

4. Swing the trigger guard away from the stock (but do not rotate it more than 90 degrees), and pull straight away from the stock to draw out the firing mechanism.

To remove a stock with a butt plate assembly after removing the firing mechanism, proceed as follows:

1. Separate the stock with a butt plate assembly from the rifle by grasping the receiver firmly with one hand and striking the butt of the stock sharply with the palm of the other.

2. Lift the stock from the barrel and receiver group.

To separate the operating rod and connector group from the barrel and receiver group, proceed as follows:

1. Depress the rear sight to the lowest position and turn the barrel and receiver group on its side with the connector assembly upward

2. If the rifle has a selector, press in and turn the selector until the face marked "A' is toward the rear of the sight knob and the projection forward is at an angle of about 35 degrees. Then remove the connector assembly, as indicated in paragraphs 3 and 4.

3. If the rifle has a selector shaft lock, press forward on the rear of the connector assembly with your right thumb, as shown in figure 3-29, until the front end can be lifted off the connector lock.

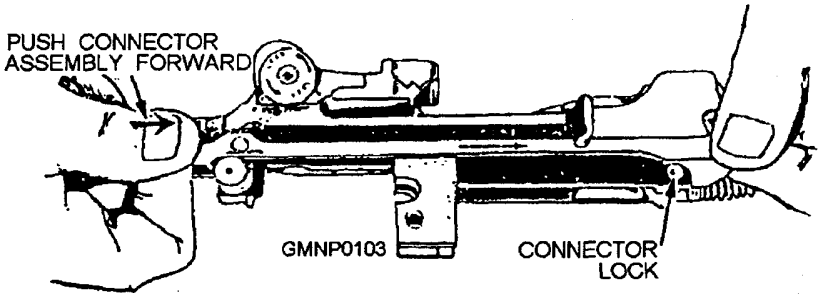

Figure 3-29.—Disengaging the connector assembly.

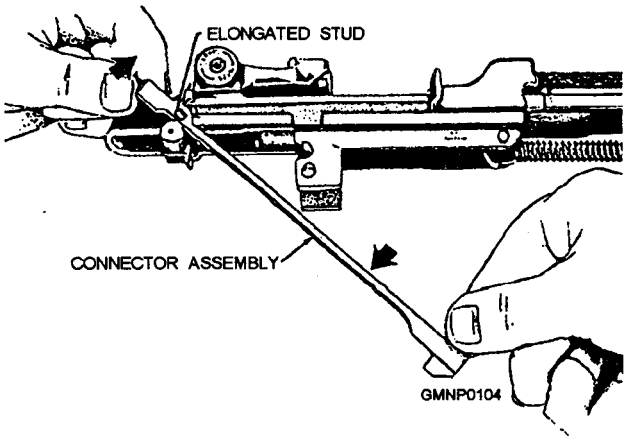

Figure 3-30.—Removing the connector assembly.

4. Rotate the connector assembly about 35 degrees clockwise until the slot at the rear is aligned with the elongated stud on the sear release (fig. 3-30); then lower the front end of the connector assembly and lift it off the sear release.

The next step is to remove the operating rod spring guide, the operating rod spring, and the operating rod. These parts are identified as 2, 3, and 4, respectively, in figure 3-31. The correct step-by-step procedure is as follows:

1. with the barrel and receiver group upside down, pull forward on the operating rod spring, relieving pressure on the connector lockpin. Pull the lock outward to disconnect the operating rod spring guide.

2. Remove the operating rod spring guide and the operating rod spring. Turn the barrel and the receiver group right side up.

3. Retract the operating rod until the key on its lower surface coincides with the notch in the receiver.

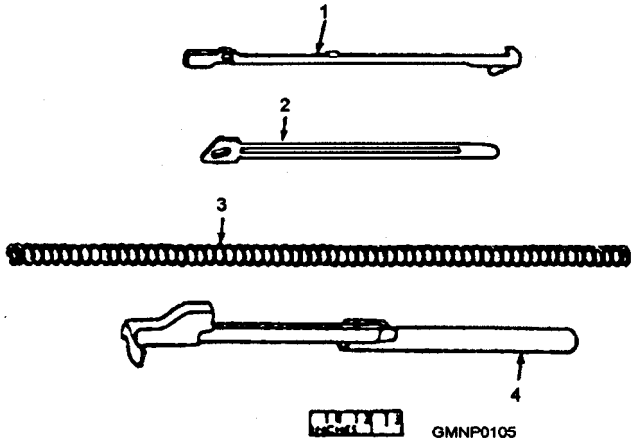

Figure 3-31.—Component parts of the operating rod and connector group.

Lift the operating rod free and pull to the rear, disengaging it from the operating rod guide.

To remove the bolt after removal of the operating rod, grasp the bolt roller that engages with the operating rod and slide it forward. Lift upward and outward to the right with a slight rotating motion and remove the bolt from the receiver. The weapon is now field-stripped for cleaning.

Reassembly of this weapon is basically the reverse of disassembly. A step-by-step procedure for reassembly and other maintenance procedures is covered in the U.S. Army FM 23-8.

M16A1 RIFLE

The M16A1 rifle (fig. 3-32) is a 5.56-mm (about .223-cal.) magazine-fed, gas-operated, air-cooled

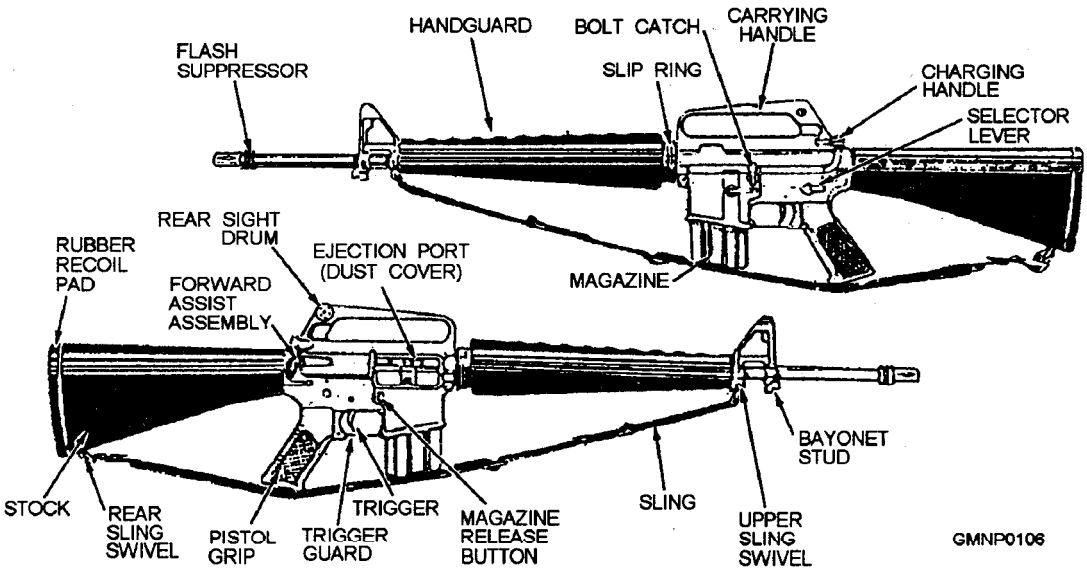

Figure 3-32.—5.56-mm M16A1 rifle, left-and right-side views.

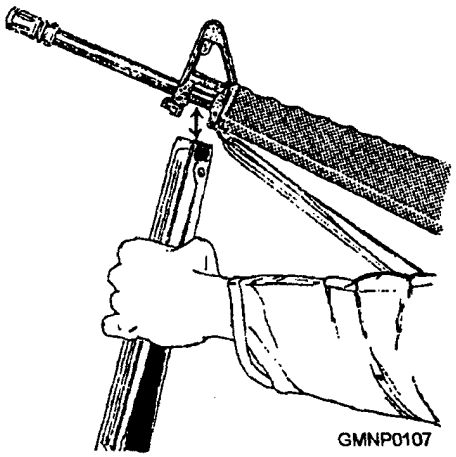

Figure 3-33.—Attaching the clothespin bipod to the M16A1 rifle.

shoulder weapon. It is designed for either semiautomatic or fully automatic fire through the use of a selector lever. The original Ml 6 rifle was introduced for service in Vietnam by the U.S. Army in 1966 and was adopted by the Marine Corps in 1968 after the addition of the Al upgrade. The M16A1, which is the current version in use by the Navy, incorporates a forward assist mechanism. The forward assist was added to allow the operator to close the bolt completely should it hang up while feeding. Heavy use in dirty conditions with the close tolerances of the bolt mechanism combine to cause many such feeding problems.

A "clothespin" bipod shown in figure 3-33 is used in the prone and foxhole positions. The bipod is attached to the barrel directly beneath the front sight between the bayonet lug and the front sling swivel.

Clearing the M16A1 Rifle

The first consideration in handling any weapon is to make it safe by clearing it. To clear the M16A1 rifle,

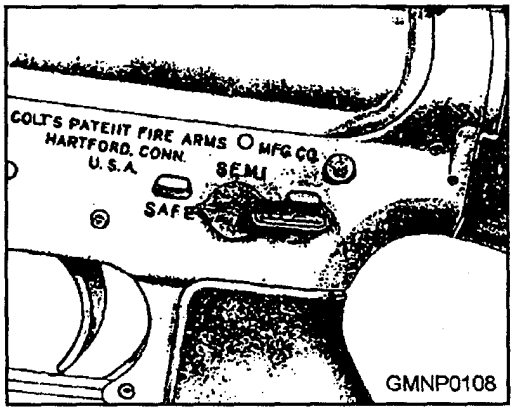

Figure 3-34.—Selector lever pointing to SAFE.

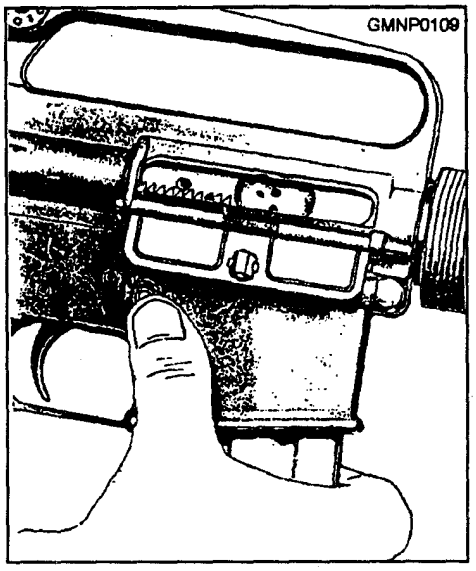

Figure 3-35.—Removing the magazine.

place the butt against the right thigh and proceed as follows:

1. Attempt to point the selector lever toward SAFE, the position shown in figure 3-34. If the weapon is not cocked, the selector lever cannot be pointed toward SAFE. If this is the case, do not cock the weapon at this time; instead, goon to the next step in clearing.

2. Remove the magazine, as shown in figure 3-35. Grasp it with the right hand (fingers curled around the front of the magazine). Place the thumb on the. magazine catch button, apply pressure on the magazine catch button with the thumb, and pull the magazine straight out of the weapon.

3. Lock the bolt open, as shown in figures 3-36 and 3-37. Grasp the charging handle with the thumb and forefinger of the right hand, depress the charging handle latch with the right thumb, and pull to the rear (fig. 3-36). When the bolt is at the rear, press the bottom of the bolt catch with the thumb or forefinger of the left hand

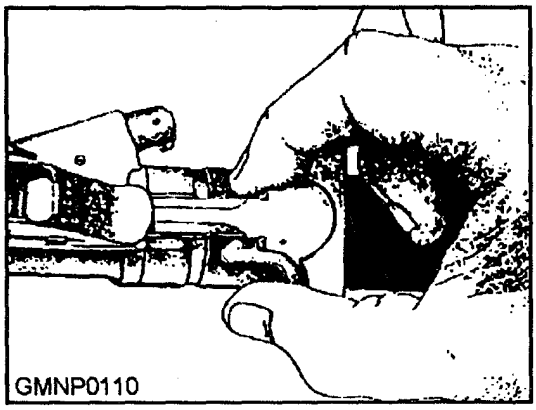

Figure 3-36.—Pulling the charging handle rearward.

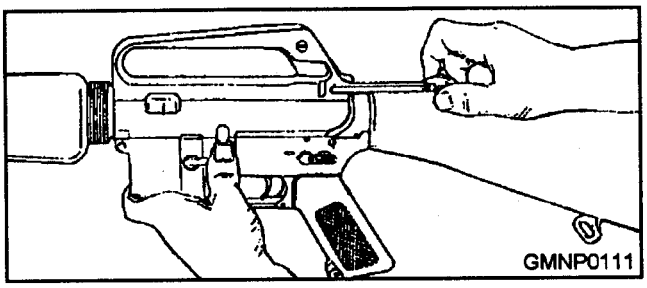

Figure 3-37.—Locking the bolt open.

(fig. 3-37). Allow the bolt to move slowly forward until it engages the bolt catch, and then return the charging handle to its forward position.

4. Inspect the receiver and chamber of the weapon by looking through the ejection port to make sure these spaces contain no ammunition.

5. Check the selector lever to make sure it points toward SAFE, and then allow the bolt to go forward by depressing the upper portion of the bolt catch.

CAUTION

The selector must be in the SAFE position to prevent damage to the automatic sear.

Field Stripping the M16A1 Rifle

The individual GM is authorized to disassemble the M16A1 to the extent called field stripping. Field stripping can be done without supervision and is adequate for normal maintenance. As the weapon is disassembled, the parts should be laid out on a table or other clean surface in the order of removal, from left to right. This makes assembly easier because the parts are assembled in the reverse order of disassembly. Nomenclature should be learned as the weapon is disassembled and assembled to enable the GM to better understand the function of the parts in the weapon.

The steps infield stripping are as follows:

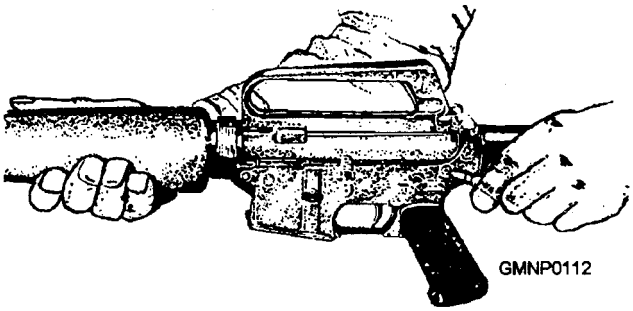

Figure 3-38.—Pressing the takedown pin to the right.

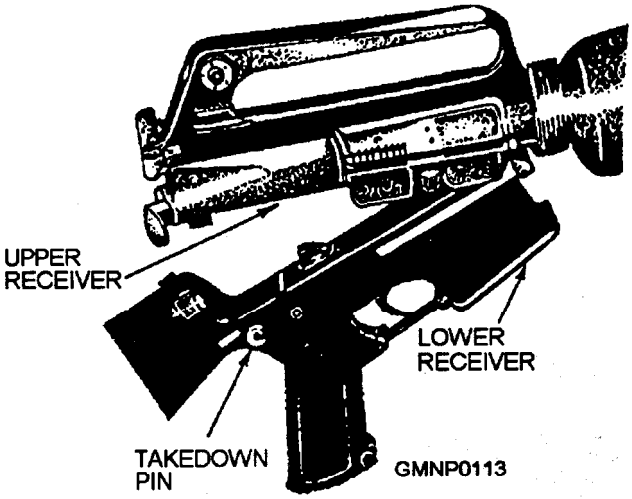

Figure 3-39.—Breaking the upper receiver away from the lower receiver.

1. Remove the sling and place the rifle on a table or flat surface, muzzle to the left.

2. Keeping the muzzle to the left, turn the weapon on its right side. Use a punch or the end of a cleaning rod (nose of cartridge used only as a last resort in the field) to press the takedown pin (fig. 3-38) until the upper receiver swings free of the lower receiver (fig. 3-39),

NOTE

The takedown pin does not come out of the receiver.

3. Again using a punch or the end of a cleaning rod, press the receiver pivot pin (fig. 3-40). Separate the upper and lower receiver groups (fig. 3-41) and place the lower receiver group on the table.

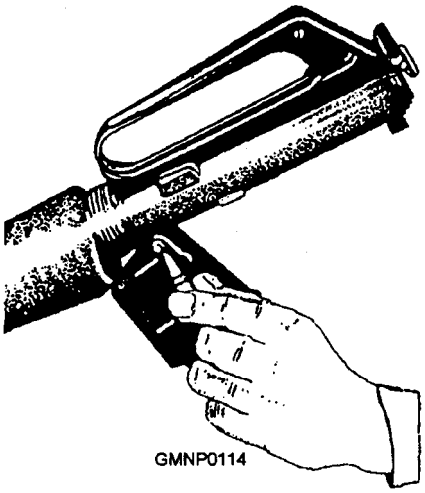

Figure 3-40.—Pressing out the receiver pivot pin.

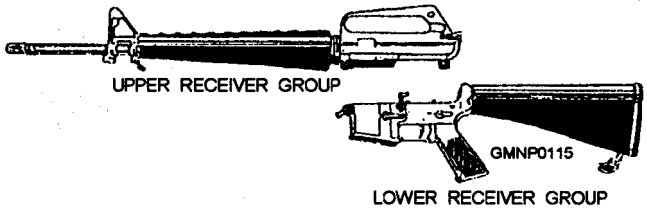

Figure 3-41.—Upper and lower receiver groups.

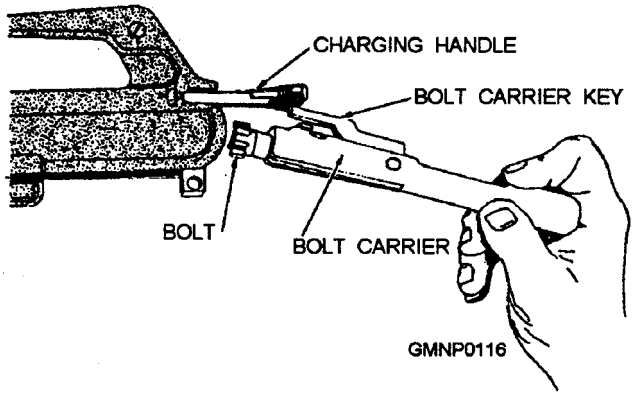

Figure 3-42.—Removing the bolt carrier from the receiver.

NOTE

The receiver pivot pin does not come out of the receiver.

4. Pick up the upper receiver group; keep the muzzle to the left. Grasp the charging handle, pressing in on the latch, and pull to the rear to withdraw the bolt carrier from the receiver. Grasp the bolt carrier and pull it from the receiver (fig. 3-42). When the bolt carrier is removed, the charging handle will fall free of its groove in the receiver (fig. 3-43). Place the receiver on the table.

5. To disassemble the bolt carrier group, press out the firing pin retaining pin by using a driftpin (fig. 3-44). Elevate the front of the bolt carrier and allow the firing pin to drop from its well in the bolt (fig. 3-45). Rotate the bolt until the cam pin is clear of the bolt carrier key and remove the cam pin by rotating it 90 degrees (one-quarter turn) and lifting it out of the well in the bolt and bolt carrier (fig. 3-46). After the cam pin is

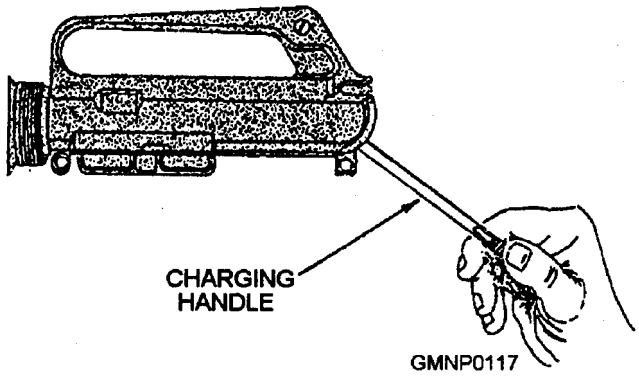

Figure 3-43.—Removing the charging handle.

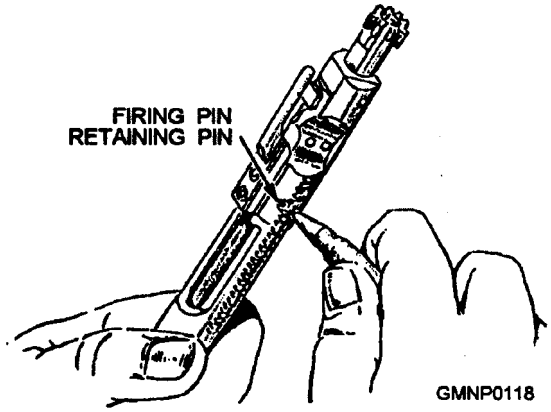

Figure 3-44.—Pressing out the firing pin retaining pin.

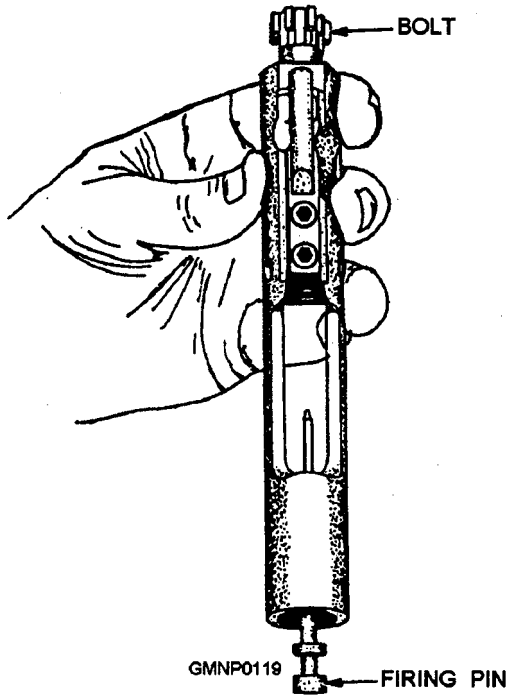

Figure 3-45.—Removing the firing pin.

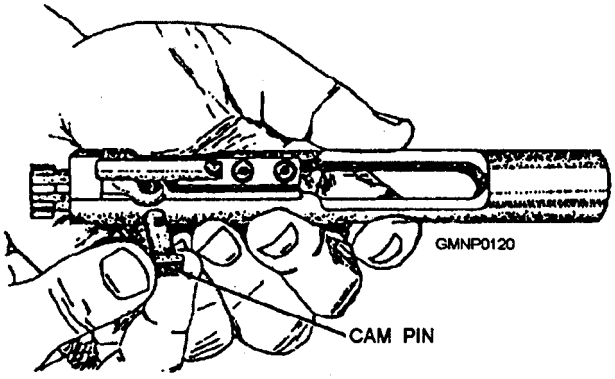

Figure 3-46.—Removing the cam pin.

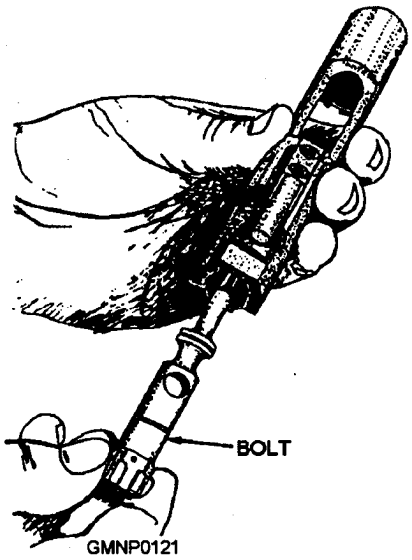

Figure 3-47.—Removing the bolt.

removed, the bolt can be easily removed from its recess in the bolt carrier (fig. 3-47).

Loading the Magazine

Magazines are available with a capacity of 20 or 30 rounds and may be loaded with any amount up to that capacity. 'he magazine follower has a raised portion generally resembling the outline of a cartridge. Cartridges are loaded into the magazine so that the tips of the bullets point in the same direction as the raised portion of the follower (fig. 3-48).

A magazine charger and magazine charger strip (fig. 3-49) are provided to facilitate loading of the magazine.

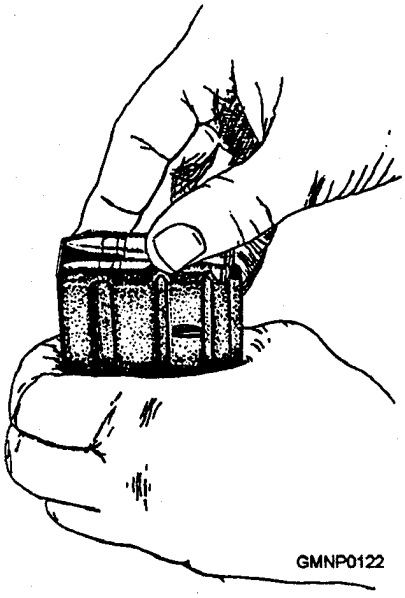

Figure 3-48.—Loading cartridges into the magazine.

The magazine charger is connected to the magazine and is fully seated. The charger strip is inserted into the magazine charger until it is fully seated. Pushing on the top cartridge will force cartridges into the magazine.

Loading the Rifle

with the weapon cocked, place the selector lever on SAFE. The magazine may be inserted with the bolt either open or closed; however, you should learn to load with the bolt open. This reduces the possibility of a first-round stoppage and saves the time required to chamber the first round by pulling back the charging handle.

Open the bolt and lock it open as previously described. Hold the stock of the rifle under the right arm with the right hand grasping the pistol grip and point the muzzle in a safe direction. With the left hand, insert a loaded magazine into the magazine feedway. Push upward until the magazine catch engages and holds the magazine. Rap the base of the magazine sharply with the heel of the hand to ensure positive retention. Then release the bolt by depressing the upper portion of the bolt catch as previously described The bolt, as it rides forward, will chamber the top round

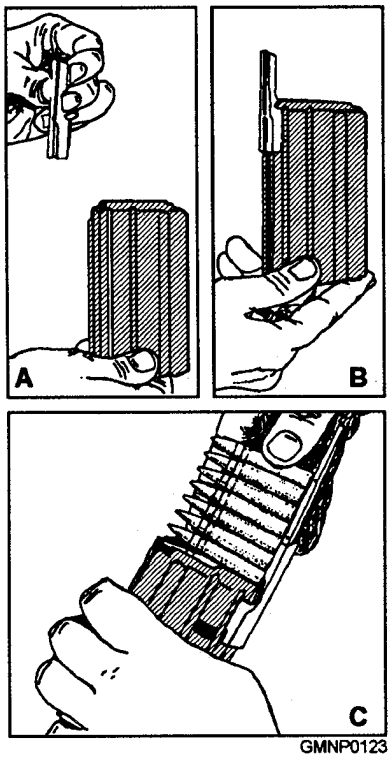

Figure 3-19.—Luading cartridges into the magazine with the magazine loading strip and charger.

If you load the rifle with the bolt closed, you chamber the top round by pulling the charging handle fully to the rear and releasing it.

NOTE

Do not "ride" the charging handle forward with the right hand. If the handle is eased forward from the OPEN position, the bolt may fail to lock. If the bolt fails to go forward fully, strike the forward assist assembly with the heel of the right hand.

Unloading the Rifle

To unload the rifle and make it safe, place the selector lever on SAFE, press the magazine catch button and remove the magazine, pull the charging handle to the rear, inspect the chamber to make sure it is clear, lock the bolt carrier to the rear by depressing the lower portion of the bolt catch, and return the charging handle forward.

Remember, the rifle is clear (and therefore safe) only when no round is in the chamber, the magazine is out, the bolt carrier is to the rear, and the selector lever is on the SAFE setting.

Gun Maintenance

A clean, properly lubricated and maintained M16Al rifle will function properly and fire accurately when needed. To keep the rifle in good operating condition, you must take care of it properly and maintenance must be performed according to set procedures. Procedures for the care and cleaning of the rifle can be found on the 3-M Systems MRCs or in the Army's TM 9-1005-249-10.

Maintenance of the M16A1 rifle is generally the same as for other small arms previously discussed. The bore and chamber must be kept free of residue and foreign matter. Inspect, while cleaning and lubricating, all sliding or working surfaces for burrs, cracks, or worn areas (repair or replace as necessary) and lubricate with a thin film of lubricant. Remove dirt, rust, grit, gummed oil, and water as these will cause rapid deterioration of the inner mechanism and outer surfaces.

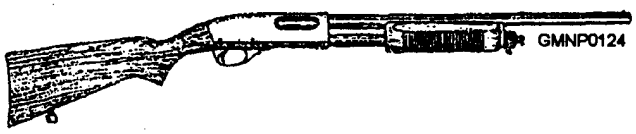

Figure 3S0.—Remington M870 shotgun.

SHOTGUNS

LEARNING OBJECTIVE Describe the operating cycle, safeties, and maintenance of the Remington M870 and the Mossberg M500 shotguns.

Shotguns used by the armed forces are military versions of civilian models procured from military specifications. The Remington model 870 (M870) and the Mossberg model 500 (M500) are the Navy's standard issue riot type of shotguns. In this section we will describe the Remington M870 (fig, 3-50) in detail, then note how the Mossberg 500 differs. The Mossberg 500 is very similar to the Remington 870 in construction and operation.

REMINGTON M870 SHOTGUN

The M870 shotgun, used by the Navy for guard work, is a manually operated magazine-fed (tubular), pump-action shoulder weapon.

Technical Description

The essential features of the Remington M870 shotgun are displayed here in chart form for easy reference.

Length of shotgun	39 inches (approximately)
Length of barrel	20 inches
Magazine capacity—rounds	4
Shell (gauge)	12
Ammunition	12 gauge, 2 3/4 inch 00 buck, military round
Safety	Crossbolt type
Fore-end	Plain beaver-tail style

Functioning of the Remington M870

The M870 shotgun can be loaded and unloaded in several different ways. The following paragraphs describe the different options for loading and unloading the M870 and how to operate the mechanical safety. A single load puts a round directly into the chamber for fast firing, while a magazine load fully loads the tubular magazine, but does not chamber around. Loading the barrel from the magazine chambers a round from the loaded tubular magazine for firing.

SAFETY.— Before loading or unloading, push the safety (fig. 3-5 1) across the rear of the trigger, left to right, to the SAFE position (the red band on the safety will not show).

FIRE POSITION.— Push the safety across to the FIRE position (the red band on the safety will show). The trigger can then be pulled to fire the gun.

SINGLE LOAD.— Push the safety to the SAFE position. Press in the action bar lock (fig. 3-51) if the action is cocked and pull the fore-end fully to the rear. Place the shell into the open ejection port upon the downthrust carrier. Slide the fore-end toward the muzzle to load the shell into the barrel chamber and leek the action closed

MAGAZINE LOAD.— Push the safety to the SAFE position. Slide the fore-end completely forward to close the action. Turn the gun bottom upward and press the shell against the carrier, then forward fully into the magazine. Make sure the rim of the shell snaps past the shell latch to prevent the shell from sliding back over the carrier. Should this occur, open the action or, if necessary, remove the trigger plate assembly (fig. 3-52) if the gun is cocked to remove the shell.

LOADING THE BARREL FROM THE MAGAZINE.— Shells can be fed from the loaded magazine by simply pumping the fore-end. Press in the

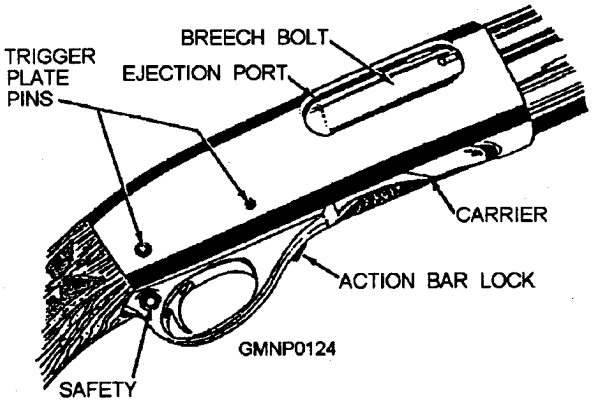

Figure 3-51.—Remington M870 receiver nomenclature.

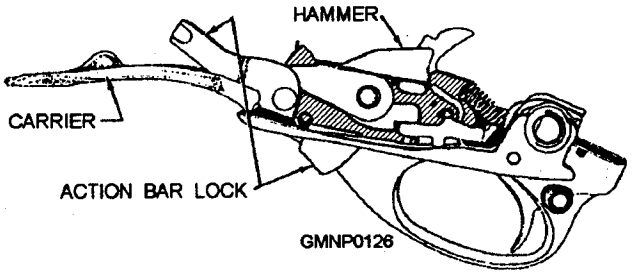

Figure 3-52.—M87O trigger plate assembly.

action bar leek if the gun is cocked Pump the fore-end back and forth to open and close the action.

UNLOADING THE GUN.— Pushthe safety to the SAFE position. Press in the action bar lock; pull the fore-end (fig. 3-53) slowly rearward until the front end of the shell from the barrel is even with the ejection port in the receiver. Lift the front of the shell outward and remove it from the ejection port. Continue pulling the fore-end back fully until the next shell releases from the magazine. Roll the gun sideways to allow the released shell to drop from the ejection port. Close the action by pushing forward on the fore-end. Continue this same method until the magazine and gun are empty.

CAUTION

Open the action and check the shell chamber in the breech and magazine to make sure no rounds remain in the gun.

UNLOADING THE BARREL ONLY.— Push the safety to the SAFE position. Press in the action bar leek and pull the fore-end rearward until the front end of the shell from the barrel is even with the front end of the ejection port. Lift the front end of the shell from the receiver as described previously. A shell with different powder and shot combination may then be placed in the chamber and the action closed without disturbing shells in the magazine.

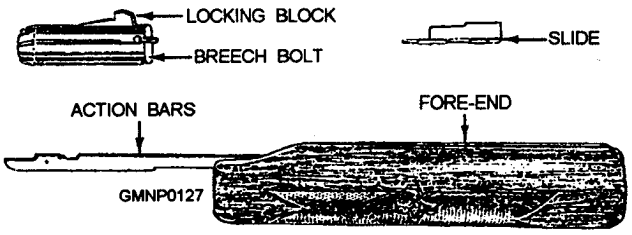

Figure 3-53.—M87O fore-end assembly.

Remington M870 Operating Cycle

To understand an operating cycle of the M870 shotgun fully, you must know the names and general functions of the parts of the gun. To become more familiar with the parts during our discussion of an operating cycle, refer to figure 3-54A, the individual parts breakdown, and figure 3-54B, the accompanying parts list.

The entire operating cycle of the M870 shotgun is completed by pulling the trigger, sliding the fore-end rearward to open the action, and forward again to close the action. The fore-end is mounted on double-action bars and is fully controlled and operated by the shooter.

Assume the magazine is loaded and one shell is in the chamber and locked; the gun is ready to fire. The firing cycle is described in the following paragraphs.

FIRING.— with the crossbolt safety pushed to the FIRE position (red band showing), the gun is fired by pulling the trigger. The top part of the trigger rotates forward carrying the right connector, in READY position, forward against the sear. This movement pivots the sear out of engagement with the hammer. The released hammer, with force from the spring-loaded hammer plunger, strikes the firing pin, which is pinned in the breech bolt and spring retracted. The firing pin strikes the primer and ignites the powder charge. During the upward movement of the hammer, it engages the action bar lock just before it strikes the firing pin. Downward movement of the front of the action bar lock is restrained until pressure against it is briefly released by the shooter's arm as it recoils rearward When the action bar lock is released, the forward end of the action bar lock is lowered from its position at the rear of the left action bar, and the rear section rises and lifts the left connector, which lifts the right connector from contact with the sear. This completes the "lock or firing cycle. The action bar lock serves a twofold purpose. It serves as a safety feature that disconnects the trigger assembly and sear until a shell is fully seated in the chamber and the breech mechanism again is ready for firing and it locks the action closed.

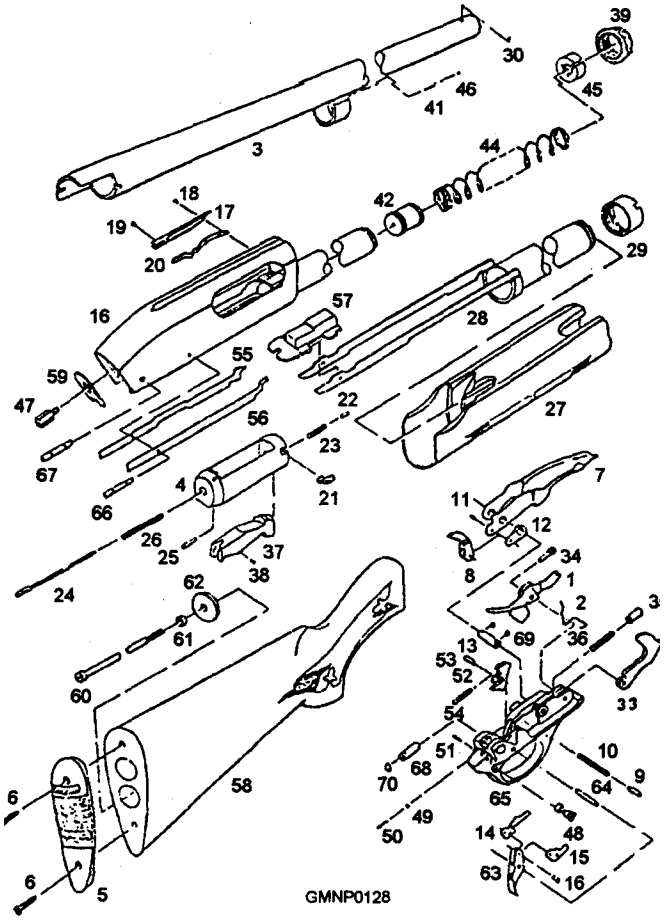

Figure 3-54A.—M87O individual parts breakdown.

After pulling the trigger, pulling the fore-end rearward will open the action and accomplish the unlock, extract, eject, cock, and feed cycles.

UNLOCKING.— The initial rearward movement of the fore-end, after the shell has been fired, carries the slide to the rear of the breech bolt. As the breech bolt passes to the rear, the slide cams the locking block from the recoil shoulder of the barrel. This movement unlocks the action and cams the firing pinto the rear where it is locked and prevented from protruding through the bolt face.

EXTRACTING.— Continued rearward movement of the fore-end opens the action. The breech bolt moves back and the fired shell is extracted from the chamber. The extractor claw, which overhangs the bolt face, grips the rim of the shell tightly as extraction progresses. Pivot pressure is exerted on the rear of the extractor by the extractor plunger and spring.

EJECTING.— AS the extracted shell clears the chamber, its base engages a shoulder on the rear of the ejector spring, which is located on the left side of the receiver. This pivots the shell so its front end is ejected first through the ejection port.

COCKING.— Before ejection occurs, the breech bolt in its rearward travel forces the hammer down against the coiled hammer spring to engage the sear. Sear spring pressure locks the sear in a notched position against the cocked hammer.

VIEW NO.	NAME OF PART
1	Action Bar Lock
2	Action Bar Lock Spring
3	Barrel Asssembly, 12 Ga. PLAIN, 20" (includes Barrel, Barrel Guide Ring, Barrel Guide Pin Front Sight (Steel), Magazine Cap Detent, Magazine Cap Detent Spring)
4	Breech Bolt, 12 Ga.
	Breech Bolt Assembly, Complete, 12 Ga. (includes Breech Bolt, Extractor, Extractor Plunger, Extractor Spring, Firing Pin, Firing Pin Retaining Pin, Firing Pin Retractor Spring, Locking Block Assembly, Slide)
5	Butt Plate
6	Butt Plate Screw
7	Carrier
	Carrier Assembly, (includes Carrier, Carrier Dog, Carrier Dog Pin, Carrier Dog Washer)
8	Carrier Dog
9	Carrier Dog Follower
10	Carrier Dog Follower Spring
11	Carrier Dog Pin
12	Carrier Dog Washer
13	Carrier Pivot Tube
14	Connector, Left
15	Connector, Right
16	Connector Pin
17	Ejector, 12 Ga.
18	Ejector Rivet, Front
19	Ejector Rivet, Rear
20	Ejector Spring
21	Extractor
22	Extractor Plunger
23	Extractor Spring
24	Firing Pin
25	Firing Pin Retaining Pin
26	Firing Pin Retractor Spring
	Fore-end (Wood only) 12 Ga.
27	Fore-end Assembly, 12 Ga. (includes Fore-end, Fore-end Tube Assembly, Fore-end Tube Nut)
28	Fore-end Tube Assembly (includes Action Bar, Left; Action Bar, Right; Fore-end Tube)
29	Fore-end Tube Nut
30	Front Sight (Plain Barrel)
	Front Sight (Vent Rib) Steel Bead
	Front Sight Retaining Pin (for use on Vent Rib Steel Sight)
33	Hammer
34	Hammer Pin
	Hammer Pin Washer
35	Hammer Plunger
36	Hammer Spring
37	Locking Block Assembly (includes Locking Block, Locking Block Stud)
	Locking Block Assembly (oversize)
38	Locking Block Stud
39	Magazine Cap
40	Magazine Cap Detent
41	Magazine Cap Detent Spring
42	Magazine Follower, 12 Ga.
44	Magazine Spring
45	Magazine Spring Retainer
46	Receiver Assembly, 12 Ga. (includes Receiver, Ejector, Ejector Rivet, Front; Ejector Rivet, Rear; Ejector Spring, Magazine Tube, Barrel Support)
47	Receiver Stud
48	Safety
49	Safety Detent Ball
50	Safety Spring
51	Safety Spring Retaining Pin
52	Sear
53	Sear Pin
54	Sear Spring
55	Shell Latch, Left, 12 Ga.
56	Shell Latch, Right, 12 Ga.
57	Slide
58	Stock Assembly (includes Stock, Grip Cap, Grip Cap Screw, Butt Plate, Butt Plate Screws (2))
59	Stock Bearing Plate
60	Stock Bolt
61	Stock Bolt Lock Washer
62	Stock Bolt Washer
63	Trigger
	Trigger Assembly (includes Trigger, Connector, Left; Connector, Right; Connector Pin)
64	Trigger Pin
65	Trigger Plate, R.H. (Right Hand Safety)
	Trigger Plate, L.H.
	Trigger Plate Assembly, R.H. (includes Action Bar Lock, Action Bar Lock Spring, Carrier, Carrier Dog, Carrier Dog Follower, Carrier Dog Follower Spring, Carrier Dog Pin, Carrier Dog Washer, Carrier Pivot Tube, Connector Left; Connector Right; Connector Pin, Hammer, Hammer Pin, Hammer Pin Washer, Hammer Plunger, Hammer Spring, Safety, Safety Plunger, Safety Spring, Safety Spring Retaining Pin, Sear, Sear Pin, Sear Spring Trigger, Trigger Pin, Trigger Plate, R.H.; Trigger Plate Pin Bushing, Trigger Plate Pin Detent Springs, From (2); Trigger Plate Detent Spring, Rear)
	Trigger Plate Assembly, (L.H. Safe)
66	Trigger Plate Pin, Front
67	Trigger Plate Pin, Rear
68	Trigger Plate Pin Bushing
69	Trigger Plate Pin Detent Spring, Front
70	Trigger Plate Pin, Pin Detent Spring, Rear

Figure 3-54B.—M870 parts list.

FEEDING.— The final movement of the fore-end carries the slide, breech bolt assembly, and locking block to the rear of the receiver. Termination of this rearward stroke also permits the left action bar to cam the left shell latch, in turn, releasing the first shell from the magazine. The released shell is forced from the magazine by a spring-loaded follower. The carrier receives the released shell. Meanwhile, the right shell latch, which was caromed into the magazine way by the right action bar during the extraction cycle, intercepts the base of the second shell.

With a shell resting on the depressed carrier, forward movement of the fore-end will close the action of the gun and complete the loading and locking cycles.

LOADING.— Forward movement of the fore-end will carry with it the slide, the breech bolt, and the locking block. The carrier dog is engaged by the slide, pivots the shell carrier upward, and places a shell in the path of the returning breech bolt. As the bolt continues to advance, it depresses the ejector spring and the shell is picked up and loaded into the chamber. The carrier dog is released by the passing slide, forced up by the carrier dog follower, and pivots the carrier from the path of the loading shell. The following shell from the magazine, being retained by the right shell latch, is released by the caroming action of the returning right action bar. At this point the shell is intercepted and held by the left shell latch until the next feeding cycle.

LOCKING.— When the shell is fully loaded in the chamber, the action closes and the bolt is against the shell base. The slide continues to travel within the bolt and cams the locking block into the recoil shoulder of the barrel. The locking block secures the breech bolt firmly and is supported by the slide as it completes its forward travel. With the locking block fully seated, the passage through the locking block allows protrusion of the firing pin through the bolt face.

Maintenance

The following discussion on maintenance of the M870 shotgun covers only action necessary for routine maintenance of the weapon. Maintenance is performed according to the MRCs for this weapon.

Before any disassembly of the M870 shotgun is attempted, be sure no shells remain in the chamber or magazine.

BARREL.— To remove and clean the barrel, push the safety to the SAFE position. Open the action, unscrew the magazine cap, and pull the barrel from the receiver. Replace the magazine cap on the end of the magazine tube. To clean the barrel, use a cleaning rod with a lightly oiled cloth. If powder fouling remains in the barrel, use a powder solvent to scrub the bore. After using solvent, wipe the barrel clean and re-oil it very lightly. Replace the barrel by removing the magazine cap, insert the barrel in the receiver, and replace the magazine cap.

TRIGGER PLATE ASSEMBLY.— Wlth the safety pushed to the SAFE position, cock the action. Tap out the front and rear trigger plate pins (fig. 3-54A). Lift the rear of the trigger plate from the receiver, then slide it rearward to remove it from the gun. The trigger assembly will be cleaned as a unit by brushing with a solvent. Wipe the trigger assembly dry and re-oil it very sparingly. When replacing the plate assembly in the gun, make sure the action bar lock enters the receiver easily and operates in position.

FORE-END ASSEMBLY UNIT.— Push the safety to the SAFE position. Close the action and remove the magazine cap and barrel. Reach into the bottom of the receiver and press the left shell latch inward. Remove the fore-end by sliding it forward off the magazine tube. After the fore-end assembly has been removed from the gun, the breech bolt parts and the slide may be lifted from the ends of the action bars.

NOTE

The top right edge of the slide may bind on the bottom front edge of the ejector port in the receiver. To free the slide, push downward on the front end of the bolt.

It is not necessary to disassemble the bolt for routine cleaning. Brush it with solvent to clean, then wipe it dry.

Assembly of the weapon is done in reverse of disassembly. There are, however, set procedures to follow to facilitate the assembly.

When you are assembling the fore-end parts, the gun must be cocked. During this assembly, place the slide in the correct position on the ends of the double-action bar. Place the breech bolt assembly, which includes the attached locking block assembly, over the slide on the action bars. Insert the end of the action bars into the matching grooves in the receiver. Move the fore-end slowly until contact is made with the front end of the right shell latch. Press the front right shell latch into the side of the receiver and continue moving the fore-end past this latch until contact is made with the left shell latch. Press the front of the left shell

latch in to allow the fore-end assembly to pass and move freely into the receiver. Assemble the barrel to the receiver and tighten it firmly with the magazine cap. This completes the assembly of the shotgun.

For further information on the Remington M870 shotgun, refer to the U.S. Air Force TM TO-11W3-6-2-1.

MOSSBERG M500 SHOTGUN

While very similar to the M870, the Mossberg M500 has a few significant differences. The following is a brief description of the differences that affect operation of the weapon. Figure 3-55 shows the location of the safety switch and the action lock lever on the M500 shotgun. The M500 safety switch is located on the top of the receiver and the action lock release is to the rear of the trigger guard. The M870 has the safety switch in the trigger guard and the action lock release to the front of the trigger guard. The disassembly and maintenance of the M500 is basically the same as that of the M870 so much so that they are both currently covered on the same MRC. Further information on the Mossberg M500 shotgun maybe found in the manual supplied with the weapon.

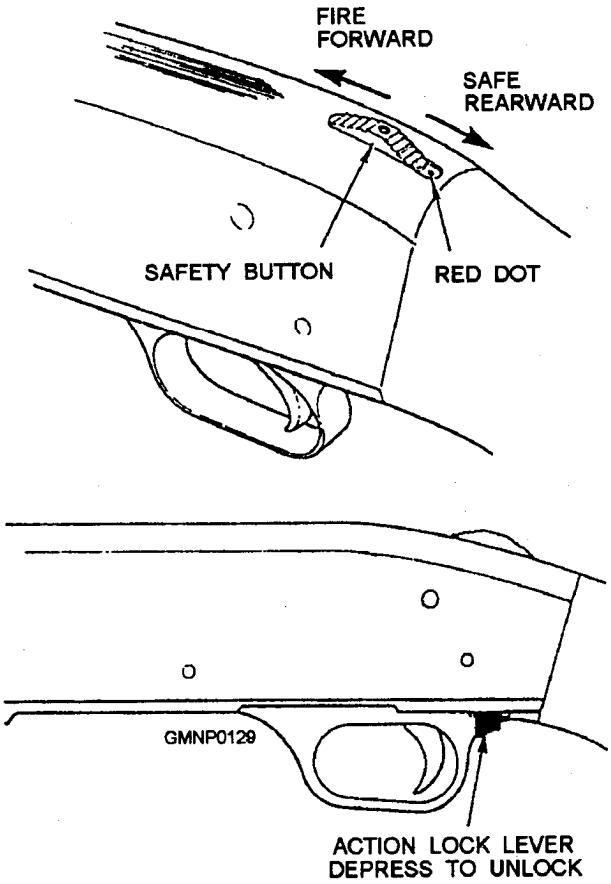

Figure 3-55.—Mossberg M500 shotgun safety and action release.

MK 87 MOD 1 LINE-THROWING RIFLE ADAPTER KIT

LEARNING OBJECTIVE Discuss the Mk 87 Mod 1 line-throwing kit and describe what is needed in preparation for firing.

This kit redates the Mk 87 Mod O kit that replaced the 45/70 line-throwing gun. Included in the kit are 6 projectiles, 1 launcher,18 chemical light wands, and 1 recoil pad. The line-throwing assembly (launcher, projectile, and canister) is designed to be used with the M14 and Ml 6A1 rifles and applicable grenade cartridges (M64 and M195, respectively).

LAUNCHER

The launcher (fig. 3-56) is used to hold the projectile and trap propellant gases that propel the projectile. It consists of a cylindrical steel tube approximately 8.5 inches long and 2.75 inches in diameter at the launching end and 1 inch in diameter at the connecting end. When the launcher is used with the M14 rifle, it slides over the flash suppressor and is secured to the rifle by the latch and its wire loop that fits over the bayonet lug of the rifle. The safety retaining pin, fastened to the launcher by a stainless steel lanyard, fits through the latch to lock the launcher to the rifle. The connecting end of the launcher is threaded internally to accept the M16A1 rifle barrel after the flash suppressor of the rifle is removed.

PROJECTILE

The projectile (fig. 3-57) fits into the launcher. When the rifle grenade cartridge is fired, the projectile

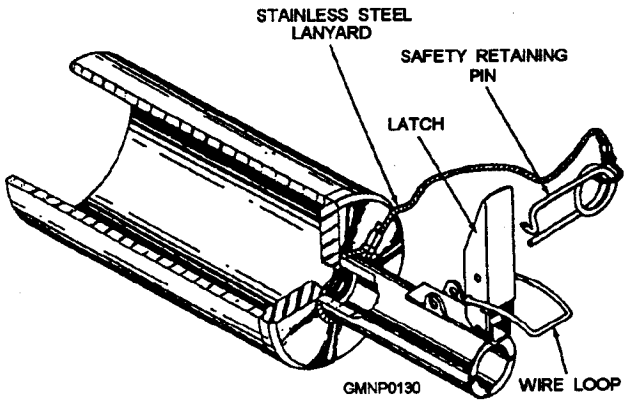

Figure 3-56.—Launcher.

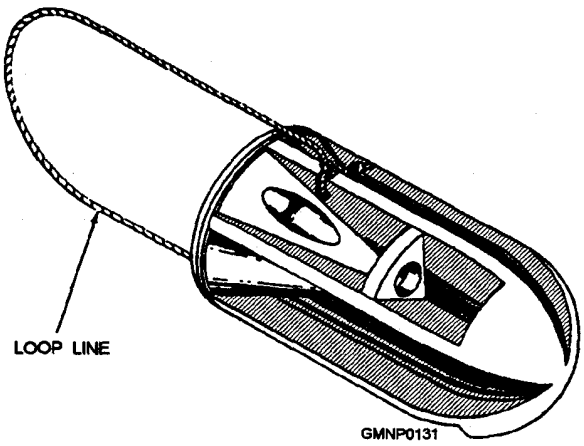

Figure 3-57.—Projectile.

carries one end of the attached shot line tome desired destination. 'he projectile also houses the chemical light wands for night operation.

The reusable projectile is made of butyl rubber with a stainless steel disk assembled in the base end. The disk absorbs the impact of the propellant gases and the wadding of the rifle grenade cartridge. The hole and groove shown in figure 3-57 support the light wand. Three of these supports, located 120 inches apart, are contained in each projectile. The loop line is used to connect the shot line to the projectile.

CHEMICAL LIGHT WAND

The chemical light wand (fig. 3-58) is used to illuminate the projectile during night operations. The light wand is installed by inserting it, tapered end first, into the hole and groove of the projectile.

The light wand is a two-component chemical illuminate system consisting of a yellow-green oxalate solution inside a nylon tube. To activate the light, flex the nylon tube enough to break an inner glass tube, as shown in figure 3-59, and shake well. Do not activate

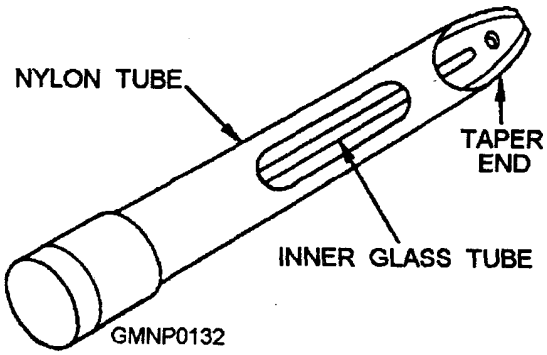

Figure 3-58.—Chemical light wand.

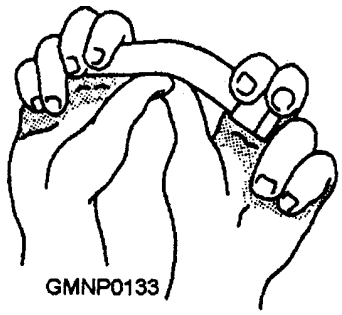

Figure 3-59.—Activating chemical light wand.

the light wand until ready to use because once it is activated it must be used or disposed of. Do not dispose of the chemical light wand overboard as it may be mistaken for a "man overboard exercise.

WARNING

If the nylon tube should puncture during activation, individuals may experience some mild discomfort from excessive skin or eye exposure to the oxalate solution. Personnel should wash exposed areas with soap and water as soon as possible.

Since the chemical light produces no flame or heat, its stowage is not restricted to ventilated and unconfined (topside) spaces. The active life of the chemical light is from 3 to 12 hours, depending on the ambient temperature. Its shelf life is approximately 2 years under normal conditions.

CANISTER

The canister (fig. 3-60) is made of polyethylene and houses the spool of shot line when attached to the appropriate rifle. Attachment is made by the metal clamp shown in figure 3-60.

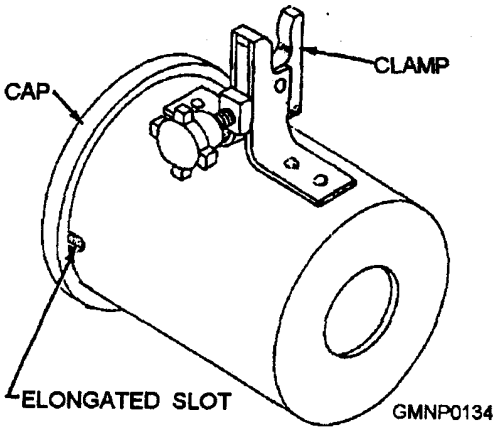

Figure 3-60.—Canister.

To install the shot line in the canister, remove the cap from the after end of the canister. Place the spool of shot line in the canister and feed the line from the center of the spool through the hole in front of the canister. Tie knot in the bitter end of the shot line and slide it into the slot at the after end of the canister. Replace the canister cap. (The action of placing the knotted end of the shot line into the canister slot attaches the bitter end of the shot line to the canister.) Connect the line coming from the front end of the canister to the loop line on the projectile. These lines (shot line and loop line) are connected by a series of loosely tied half-hitch knots (three to five). Figure 3-61 shows the canister, shot line, and launcher mounted on the M14 rifle.

Note in figure 3-61 that the use of the canister is optional. With another person holding the shot line, the canister is not needed. The canister is part of the Mod 0 kit and should be retained for optional use with the Mod 1 kit.

RECOIL PAD

The recoil pad provided by this kit will reduce the recoil on the operator when the projectile is launched. It is of the slip-on type and made of neoprene rubber that resists attacks by oil and other solvents. It is designed for a tight fit on the butt stock Thus care is required during installation to prevent tearing. Once installed on the rifle used for line throwing, it is recommended that the recoil pad not be removed. The pad is designed to fit both the M14 and M16A1 rifles. However, on the M16A1 rifle, the sling swivel is closer to the rifle butt and the skirt of the recoil pad must be folded back or cut to fit around the swivel. The recoil pad is shown installed on the M14 rifle in figure 3-61.

GRENADE CARTRIDGES

Figure 3-62 shows the grenade cartridges used with the M14 and M16A1 rifles when firing the line-throwing projectile. The larger of the two is the M64 (7.62-mm) cartridge used with the M14 rifle, while the smaller is the M195 (5.56-mm) cartridge used with the M16A1 rifle. Besides the difference in overall size, the cartridges can be identified by looking at, or by feeling, their crimped ends; the M64 is five-pointed and the M195 is seven-pointed. Only one cartridge should be loaded into the rifle at a time, and it should not be loaded until at the rail, just before firing, with the rifle pointing outboard in a safe direction. No cartridge other than those designated should ever be used to fire a line-throwing projectile.

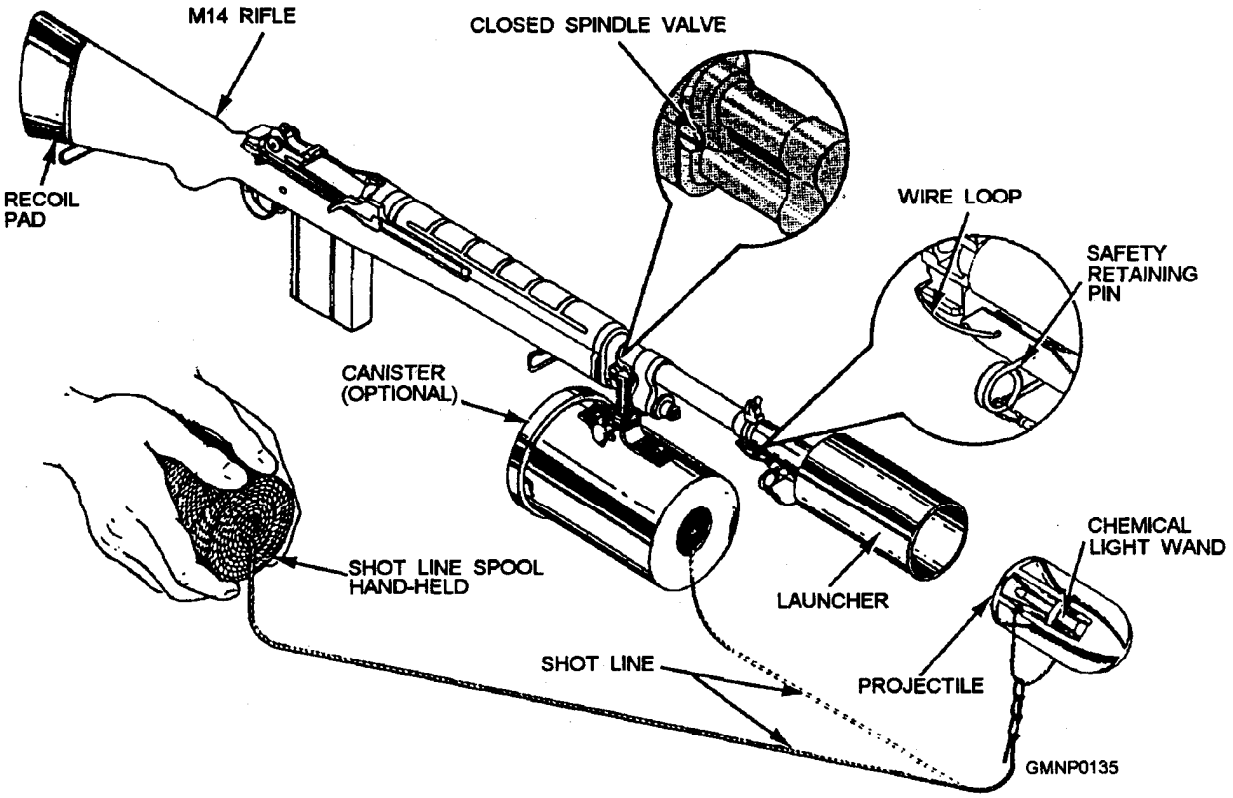

Figure 3-61.—Mk 87 Mod 1 kit on M14 rifle.

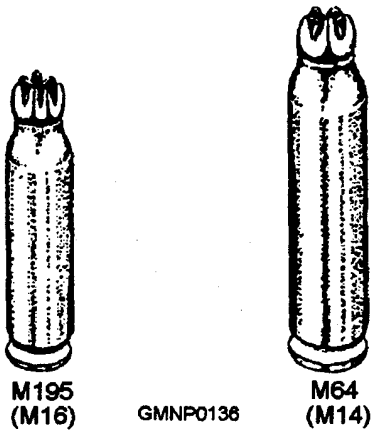

Figure 3-62.—Grenade cartridge.

SHOT LINE

The nylon shot line comes in spools (fig. 3-63). The line is approximately 550 feet long and has a tensile strength of 125 pounds. It is wound around a wooden spindle in such a way that prevents fouling the line when the projectile is fired. The line is colored international orange and is treated with a water-repellent solution to make the line buoyant enough to float on the surface at least 24 hours.

PREPARATION FOR FIRING

On the M14 rifle, the spindle valve must be in the CLOSED (slot parallel to the barrel) position (see fig. 3-61) when firing the line-throwing projectile.

NOTE

This position of the spindle valve is described as being in the OFF (horizontal) position in the first part of this chapter and in the TM9-1005-223-10.

On the M16A1 rifle, the flash suppressor must be removed and the launcher screwed onto the end of the barrel. To prevent damage to the launcher and/or the threads on the barrel, leave the lock washer that is located between the suppressor and barrel in place.

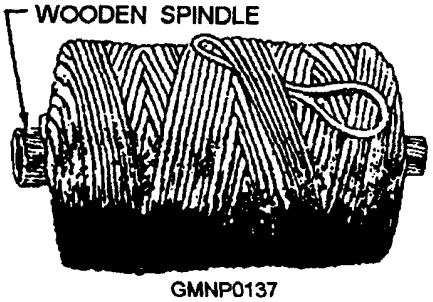

Figure 3-63.—Shot line.

FIRING

When firing the line-throwing projectile from the applicable rifle, elevate and aim the rifle over and across the designated target. Although the projectile is made of rubber, it has enough velocity to cause injury. The rifle should be kept elevated until the projectile reaches its target to prevent line entanglement,

In the event of a misfire or hangfire, wait 10 seconds before ejecting the grenade cartridge. Malfunctions of cartridges should be reported according to OPNAVINST 5102.1.

The maximum reliable range of the line-throwing projectile is approximately 90 yards when fired from the M14 rifle and approximately 85 yards when fired from the M16A1 rifle. These ranges are dependent upon having a dry shot line. A wet line can be used when a dry line is not available, but it will cause the range to be reduced. 'Fable 3-2 provides the approximate range data for firing from the M14 and M16A1 rifles.

MAINTENANCE

Maintenance and operation of the Mk 87 Mod 1 line-throwing rifle adapter kit is covered in NAVSEA SW350-A1-MMO-010. Kit maintenance is also covered by a 3-M Systems MRC.

MACHINE GUNS

LEARNING OBJECTIVE Discuss the operation and maintenance of the machine guns currently used by naval forces afloat.

Tabie 3-2.—Range Data

M14 RIFLE		M16 SERIES RIFLE	
Degrees of Elevation	Range	Degrees of Elevation	Range
60	80 yards	60	65 yards
45	90 yards	45	85 yards
30	85 yards	30	85 yards
0	55 yards	0	45 yards
NOTE: 0° (degrees) is when the rifle is parallel to the surface.			

The Navy currently uses four machine guns-the M2 .50 caliber Browning, the 7.62-mm M-60, the 20-mm Mk 16 Mod 5, and the 25-mm M242 chain gun. In this section we will provide you with some operational and maintenance information on these four weapons. Discussion on the Mk 16 Mod 5 machine gun will be brief since it is in the process of being phased out and replaced by the 25-mm M242.

THE .50-CALIBER BROWNING MACHINE GUN

Browning machine guns (abbreviated BMGs) are standard Army weapons used by the Navy. The .50-cal. BMG now used by the Navy and Army is the M2. The M2 BMG is only equipped with an air-cooled heavy barrel (HB) since the light air-cooled barrel is no longer in use.

For a time the .50-cal. BMG (fig. 3-64) was not used aboard surface ships but has since been installed on most types of ships and landing craft.

Because of its complexity, the mechanisms and the principles of operation of the .50-cal. BMG will not be taken up in this section of the chapter. For detailed information on the .50-cal. BMG, refer to the Army's FM 23-65.

The main characteristics of the .50-cal. BMG (M2) are as follows:

Weight of receiver group	56 lb
Weight of barrel	26 lb (approx)
Total weight of gun, complete, on tripod mount, M3	126 lb (approx)
Maximum range (M2 ball)	7,400 yd
Maximum effective range	2,000 yd
Cyclic rate of fire	450-500 rpm
Muzzle velocity (M2 ball)	2,930 fps
Length of gun overall	65 in. (approx)
Length of barrel	45 in.

General Description

The .50-cal. HB M2 Browning machine gun is a belt-fed, recoil-operated, air-cooled machine gun. The gun is capable of semiautomatic as well as automatic fire.

The gun is capable of alternate feed (ammunition can be fed from either the right or left side of the receiver) by repositioning some of the component parts; however, under most circumstances, the gun is fed from the left side. A disintegrating metallic link belt is used in feeding. In preparation for firing, the first round requires manual operation.

The force for recoil operation of the weapon is furnished by the expanding gases and is controlled by various springs, cams, and levers.

Air cooling of the weapon is permitted through maximum exposure to the air of the barrel and receiver. Perforations in the barrel support allow air to circulate around the breech end of the barrel and help to cool the parts. The heavy barrel is used to retard early overheating.

Operating the .50-Cal. BMG

The safest and best way to operate a .50-cal. machine gun is to follow the correct procedures. By following set procedures, you prevent damage to the gun and possible injury to you or others in the area. The operating procedures of the .50-cal. BMG include prefire, checks, loading and unloading, and postfire checks.

The primary prefire check requirement is the inspection of the weapons headspace and timing. This is done with a headspace and timing gauge (fig. 3-65). Headspace is the distance between the face of the bolt and the base of a cartridge case fully seated in the chamber. The timing of the gun makes sure that firing takes place with the bolt in the correct position (just before it reaches the full FORWARD position).

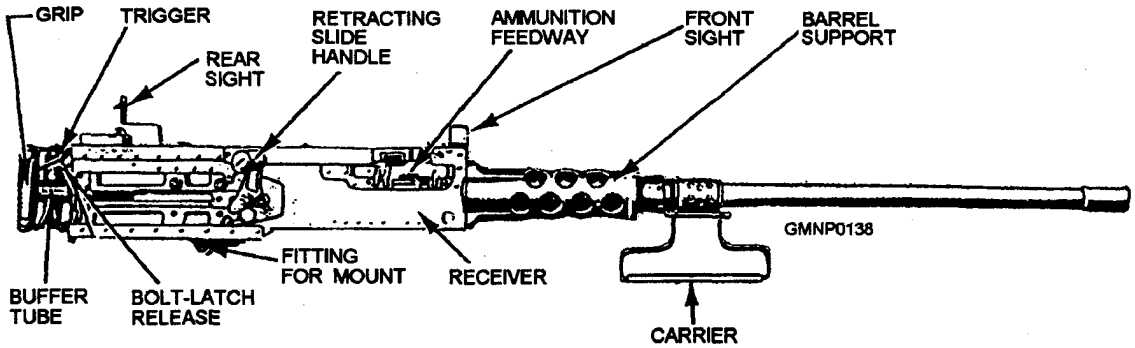

Figure 3-64.—.50-cal. HB Browning machine gun (M2).

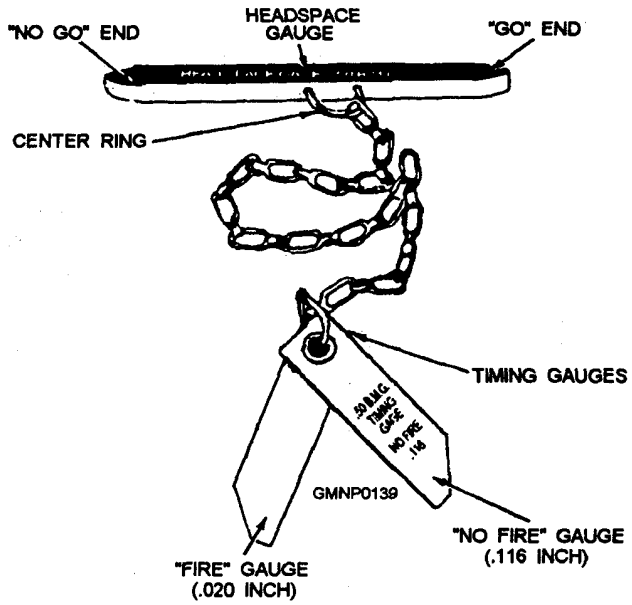

Figure 3-65.—Headspace and timing gauge.

The operator must also select automatic or semiautomatic firing; automatic is the normal mode of operation. The mode of operation is determined by the position of the bolt-latch-release lock (fig. 3-66). For automatic firing, the bolt-latch release must be locked in the DEPRESSED position by the bolt-latch-release lock. To engage the bolt-latch-release lock, first depress the bolt-latch release. Then turn the bolt-latch-release lock counterclockwise until it hooks and retains the bolt-latch release in the DEPRESSED position.

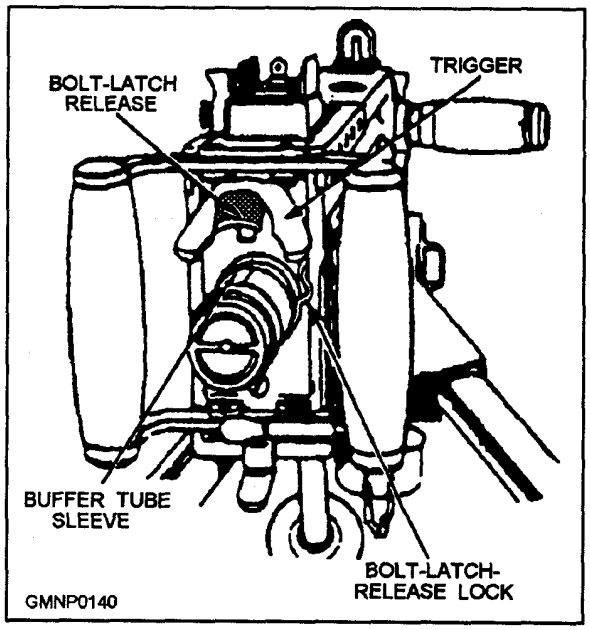

Figure 3-66.—Bolt-latch release free of the bolt-latch-release lock.

On the command HALF-LOAD, with the cover closes, the double-loop end of the ammunition belt is inserted in the feedway until the first round is held by the belt-holding pawl (fig. 3-67). The retracting slide handle is then pulled all the way to the rear and released. With the bolt-latch-release lock positioned to engage the bolt-latch release, the bolt and retracting slide handle will move forward under pressure of the driving spring group, thus half-loading the gun. However, if the bolt-latch release is up and free of the bolt-latch-release lock, the bolt latch will hold the bolt to the rear. Push the retracting slide handle all the way forward (before releasing the bolt); then press down on the bolt-latch release to let the bolt go forward.

The procedure for fully loading the gun is the same as for half-loading, except that the operation is repeated. Once fully loaded the machine gun is fired by depressing the butterfly trigger.

WARNING

Once fullyloaded, the M2 .50-cal. machine gun maintains a round of ammunition in the chamber at all times. During sustained firing operations, the high temperature of the barrel presents a possible "cook-off" situation. The weapon should always be kept pointed in a safe direction or cleared during breaks in firing. According to *Clearing of Live Ammunition from Guns,* NAVSEA SW300-BC-SAF-010, the M2 HB reaches cook-off temperatures after a burst of 250 rounds or more.

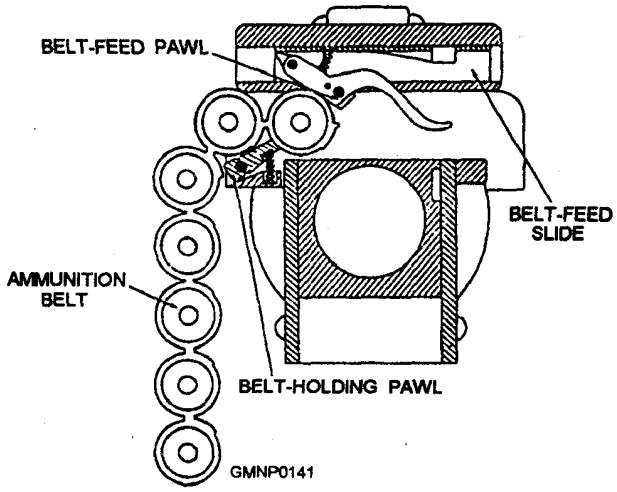

Figure 3-67.—First round held in feedway by belt-holding pawl.

An emergency situation may occur while firing the M2 or any other belt-fed machine gun: the runaway firing of the gun. That is, firing continues after the trigger has been released. This is remedied by twisting the ammunition belt at the feed slot, thereby causing it to jam and cease firing.

WARNING

In case of a runaway gun, keep the weapon laid on target and DO NOT UNLATCH THE COVER!

The bolt-latch release is unlocked to unload the gun, the cover-latch release is turned, and the cover is raised. The ammunition belt is lifted from the gun. The bolt is pulled to the rear, and the chamber and the T-slot are examined to see that they hold no rounds. After this examination, the bolt is allowed to go forward, the cover is closed and latched, and the trigger is pressed.

Gun Maintenance

The importance of a thorough knowledge of how to care for, clean, and preserve the machine gun cannot be overemphasized. Proper care, cleaning, and preservation determine whether this gun will shoot accurately and function properly when needed. The bore and chamber must be kept in perfect condition to ensure accurate fire. Because of the close fit of working surfaces and the high speed at which the gun operates, it is important that the receiver and moving parts be kept clean, well-lubricated and free of burrs, rust, dirt, or grease.

To ensure proper care of the machine gun, you must establish standard operating procedures concerning the frequency at which the gun is to be cleaned. This is normally done using the 3-M Systems MRCs. TM 9-1005-213-10 also provides maintenance instructions for this gun. Under combat conditions, it may be necessary to clean the gun where it is mounted, however, when possible, the gun should be disassembled, cleaned, and oiled in a clean, dry location where it is least exposed to moisture, dirt, and so on. Be particularly careful to remove all sand or dirt; it will act as an abrasive on moving parts, causing excessive wear, sluggish operation, or malfunction. Do not oil parts Excessively. Excessive oil solidifies and causes sluggish operation or complete failure.

Each gun should be cleaned as soon after firing as possible and each time it is taken to the field and returned. Under combat conditions, the gun should be cleaned and lightly oiled daily. Under ideal conditions, where the gun is not used and is stored in a clean, dry place, it may only be necessary to inspect, clean, and lubricate the gun once a week The threads on the gun barrels must be protected against being burred while handling and cleaning.

For more detailed information on the prescribed cleaning materials, lubricants, and rust preventives to be used in the .50-cal. BMG maintenance, refer to the Army'S FM 23-65 and TM 9-1005-213-10.

THE 7.62-MM M60 MACHINE GUN

The M60 machine gun (fig. 3-68) is an air-cooled, belt-fed, gas-operated automatic weapon. The machine gun was originally developed for use by ground troops; however, it is used on many types and classes of ships, river patrol craft, and combat helicopters.

The essential features of the M60 are as follows:

Length	43.5 in. (110.5 cm)
Weight	23 lb (10.4 kg)
Maximum range	3,725 meters (4,075 yd)
Maximum effective range	1,100 meters (1,200 yd)
Ammunition	7,62-mm ball tracer, armor-piercing, incendiary, and dummy
Rates of fire: Sustained	100 rpm
Rapid	200 rpm
Cyclic	550 rpm

The M60 has a front sight permanently affixed to the barrel. The rear sight leaf is mounted on a spring type of dovetail base (fig. 3-69). It can be folded forward to the horizontal when the gun is to be moved. The range plate on the sight leaf is marked for each 100 meters, from 300 meters to the maximum effective range of 1,100 meters. Range changes maybe made by using either the slide release or the elevating knob. The slide release is used for making major changes in elevation. The elevating knob is used for fine adjustments, such as during zeroing. Four clicks on the elevating knob equal a 1-mil change of elevation. The sight is adjustable for windage 5 mils right and left of zero. The windage knob is located on the left side of the sight. One click on the windage knob equals a 1-mil change of deflection.

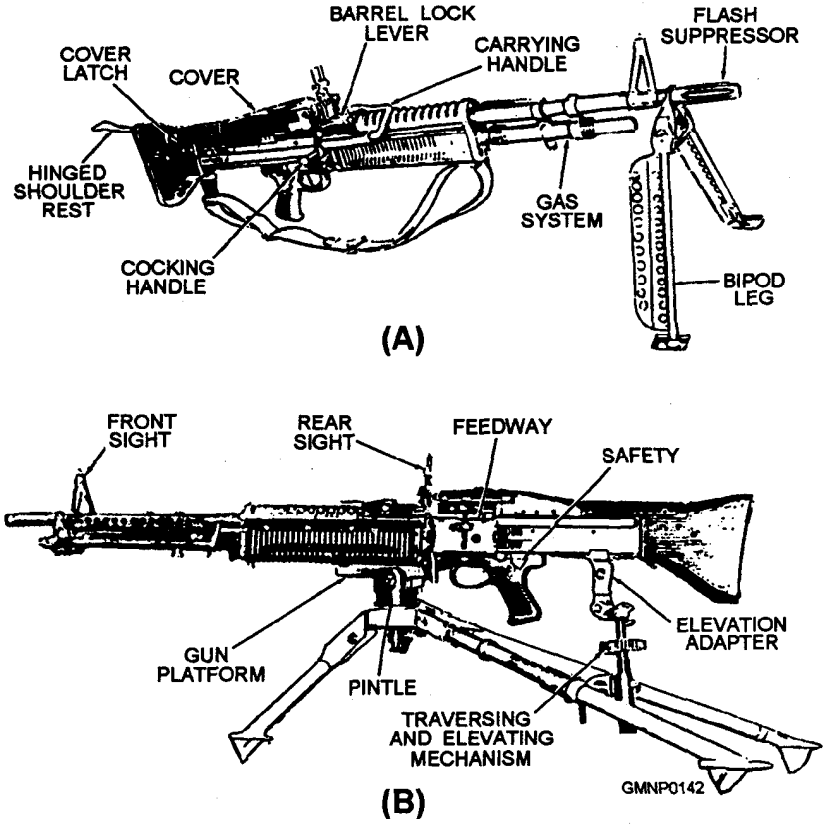

Figure 3-68.—M60 machine gun: (A) Bipod mounted; (B) Tripod mounted.

NOTE

1 mil equals 1 inch at 1,000 inches, 1 yard at 1,000 yards, 1 meter at 1,000 meters, and so on.

A safety lever is located on the left side of the trigger housing. It has an S (SAFE) position and an F (FIRE) position. On the SAFE position the bolt cannot be pulled to the rear or released to go forward. The cocking lever, on the right side of the gun, is used to pull the bolt to the rear. It must be returned manually to its FORWARD position each time the bolt is manually pulled to the rear.

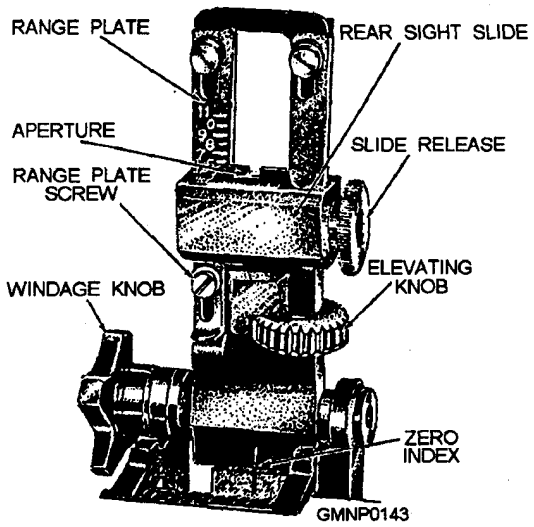

Figure 3-69.—M60 rear sight.

The M60 machine gun may be installed in helicopters by use of special mounts installed in the doors or escape hatches. The mount consists of an ammunition can support, a spent round chute, a link chute, and a stowage bag. The machine gun can be easily installed and removed from the mount by use of quick-release pins. Firing stops are incorporated into the design of the mount to determine the azimuth and elevation limits of the machine gun.

Operation

The machine gun is designed to function automatically as long as ammunition is fed into the gun and the trigger is held to the rear. Each time around is fired, the parts of the machine gun function in a certain sequence. Many of the actions occur simultaneously and are only separated for teaching purposes. The sequence of operation is known as the cycle of operation.

For ease of understanding, the complete cycle of operation is discussed in the following eight steps:

1. Feeding: Around is positioned in the feed tray groove.
2. Cambering: Around is stripped from the belt and placed in the chamber.
3. Locking: The bolt is locked inside the barrel socket.
4. Firing: The firing pin strikes and initiates the primer of the cartridge.
5. Unlocking: The bolt is unlocked from the barrel socket.
6. Extracting: The empty case is pulled from the chamber.
7. Ejecting: The empty cartridge case is thrown from the receiver.
8. Cocking: The sear engages the sear notch.

The cycle starts by putting a round in the feed tray groove and then pulling the trigger, releasing the sear from the sear notch (fig. 3-70). It stops when the trigger is released and the sear again engages the sear notch in the operating rod. When the trigger is held to the rear, the rear of the sear is lowered and disengaged from the sear notch. This allows the operating rod and bolt to be driven forward by the expansion of the operating rod spring. Now that the gun is functioning, the steps of the cycle can be traced

As the bolt begins its forward movement, the feed cam is forced to the right, causing the feed cam lever to pivot in the opposite direction and forcing the feed pawl over the next round in the belt, ready to place it in the feed tray groove when the rearward action occurs again. As the bolt moves to the rear after the firing, the cam roller in the top of the bolt forces the feed cam to the left. The feed cam lever is forced to pivot, moving the feed pawl to the right, placing a round in the feed tray groove, as shown in figure 3-71.

As the bolt travels forward, the upper locking lug engages the rim of the cartridge. The pressure of the front and rear cartridge guides hold the round so that positive contact is made with the upper locking lug of the bolt. The front cartridge guide prevents the forward motion of the link as the round is stripped from the belt. The upper locking lug carries the round forward, and the cambering ramp causes the nose of the cartridge to be caromed downward into the chamber, as shown in figure 3-72. When the round is fully seated in the chamber, the extractor snaps over the rim of the cartridge, and the ejector on the face of the bolt is depressed.

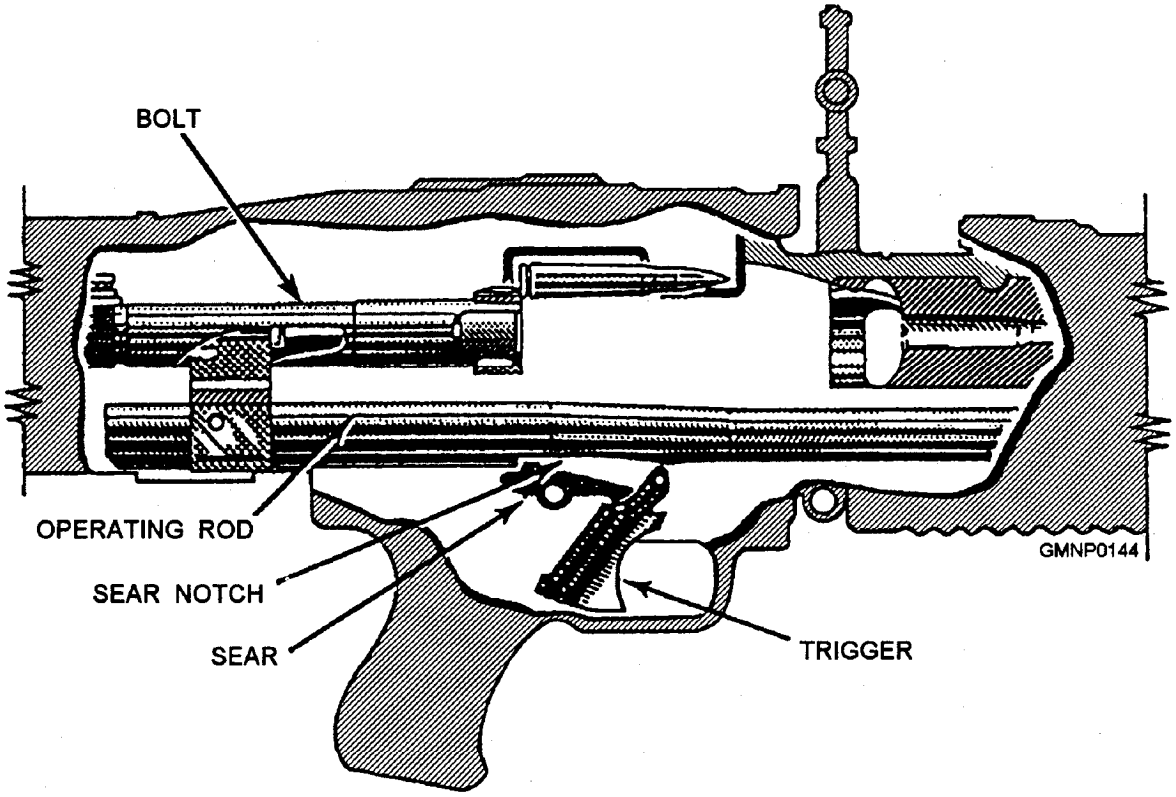

Figure 3-70.—Sear disengaging from sear notch.

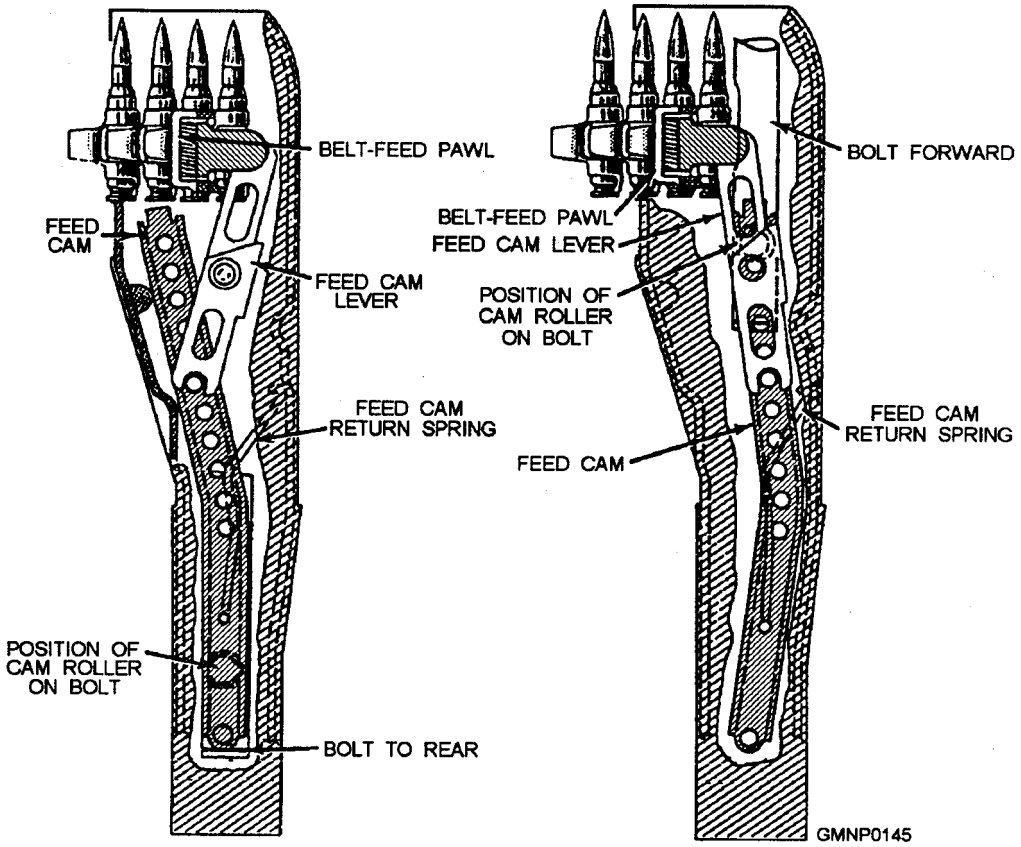

Figure 3-71.—Feeding.

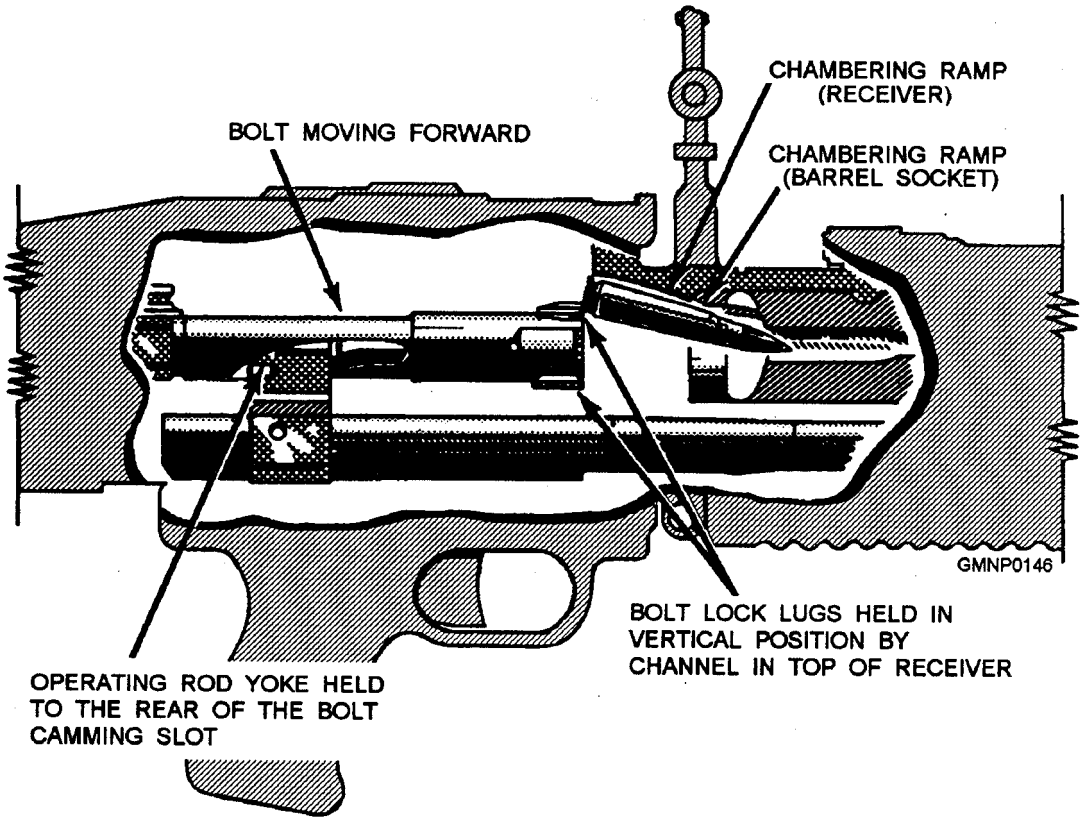

Figure 3-72.—Chambering.

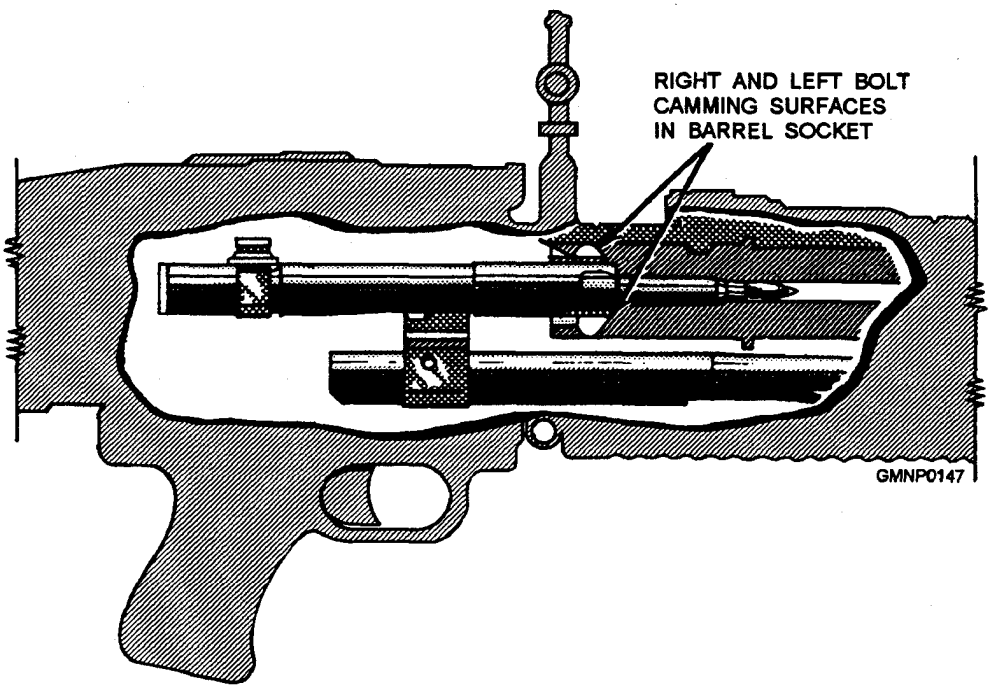

Figure 3-73.—Weapon locked, ready to fire.

As the round is chambered, the bolt enters the barrel socket. The upper and lower locking lugs contact the bolt caroming surfaces inside the barrel socket and start the rotation of the bolt clockwise. The action of the operating rod yoke against the bolt caroming slot, as the operating rod continues forward, causes the bolt to complete its one-quarter turn clockwise rotation (fig. 3-73). Locking is then completed.

After the bolt reaches its fully forward and locked position, the operating rod continues to go forward, independently of the bolt, for a short distance. The yoke, engaged between the firing pin spools, carries the firing pin forward. The striker of the firing pin protrudes through the aperture in the face of the bolt, strikes the primer of the cartridge, and ignites it. This action is shown in figure 3-74.

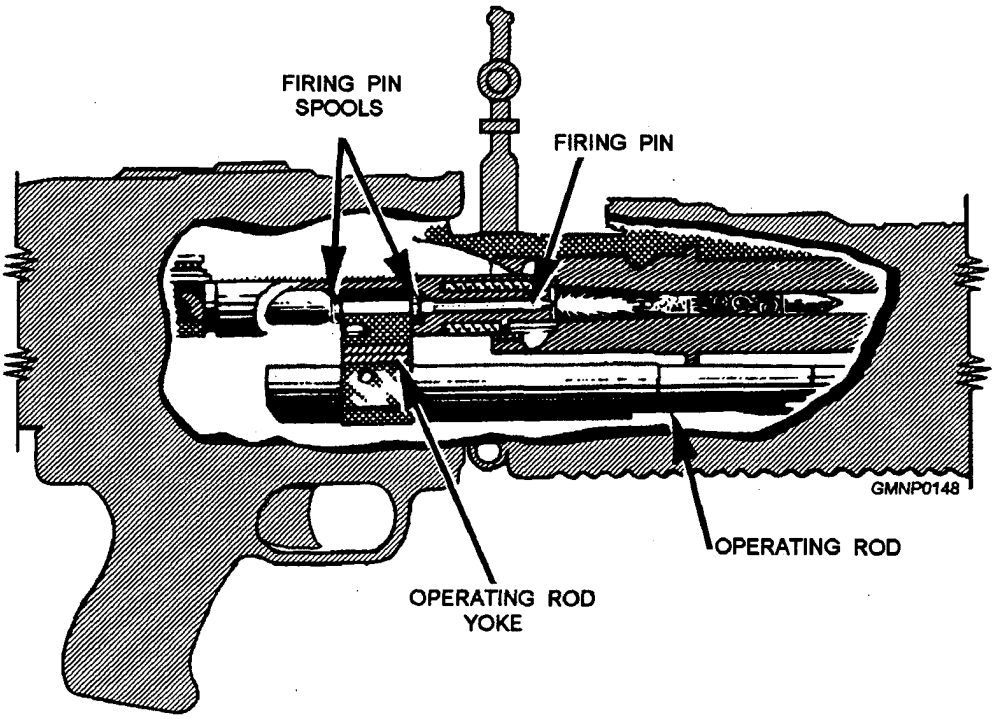

Figure 3-74.—Firing.

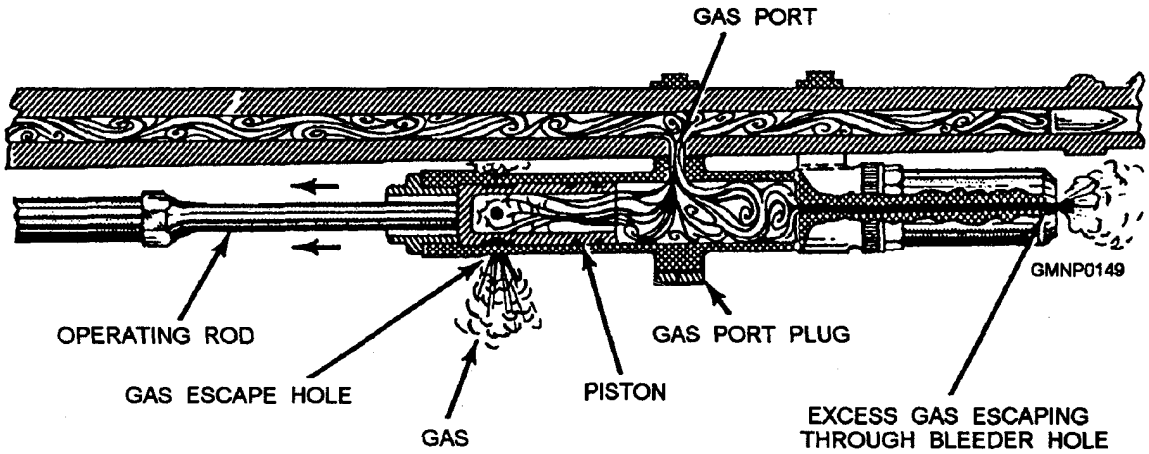

Figure 3-75.—Unlocking action of gases.

After the cartridge is ignited and the projectile passes the gas port, part of the expanding gases enter the gas cylinder through the gas port. The rapidly expanding gases enter the hollow gas piston, as shown in figure 3-75, and force the piston to the rear. The operating rod, being in contact with the piston, is also pushed to the rear. As the operating rod continues to the rear, the operating rod yoke acts against the bolt caroming slot to cause the bolt to begin its counterclockwise rotation. The upper and lower locking lugs of the bolt, contacting the bolt caroming surfaces inside the barrel socket, cause the bolt to complete its one-quarter turn rotation (counter-clockwise) and unlock the bolt from the barrel socket. Unlocking begins as the yoke of the operating rod contacts the curve of the bolt caroming slot and ends as the bolt clears the end of the barrel socket.

While unlocking is going on, extraction is beginning. The rotation of the bolt, in unlocking, loosens the cartridge case in the chamber. As the operating rod and bolt continue to the rear, the extractor (gripping the rim of the cartridge) pulls the cartridge case from the chamber. As the case is withdrawn from the chamber, the ejector spring expands. The ejector presses on the base of the cartridge case, forcing the front of the spent case against the right side of the receiver, as shown in figure 3-76. As the bolt continues to the rear, the action of the ejector pushing against the base of the cartridge case and the extractor gripping the right side of the case cause the cartridge case to spin from the gun as the case reaches the ejection port. The empty link is forced out of the link ejection port as the rearward movement of the bolt causes the next round to be positioned in the feed plate groove.

As the expanding gases force the gas piston to the rear, the operating rod is initially moved independently of the bolt. The yoke of the operating rod acts against the rear firing pin spool, withdrawing the firing pin from the primer of the spent cartridge case. The action of the operating rod yoke continuing to the rear against the rear firing pin spool fully compresses the firing pin spring. As long as the trigger is held to the rear, the weapon will continue to complete the first seven steps of functioning automatically y. When the trigger is released and the sear again engages the sear notch, the cycle of functioning is stopped and the weapon is cocked.

Disassembly

Two types of disassembly procedures may be performed on the M60 machine gun—general and detailed. General disassembly procedures involve the removal of most of the major groups and assemblies of the weapon, while the detailed procedures consist of removing the components of the major groups. Because of the complexity of the detailed procedures and the many steps and parts involved, only the general disassembly procedures are discussed here.

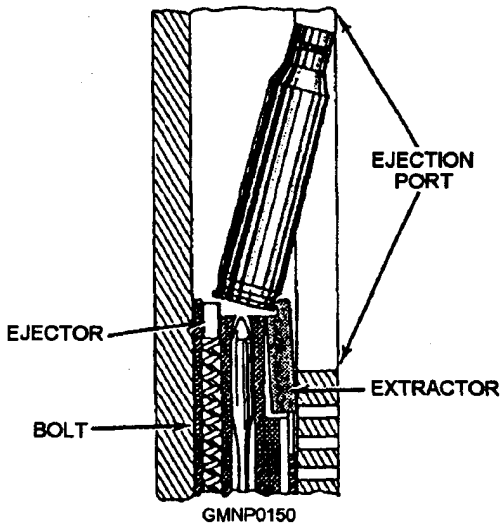

Figure 3-76.—Extraction and ejection.

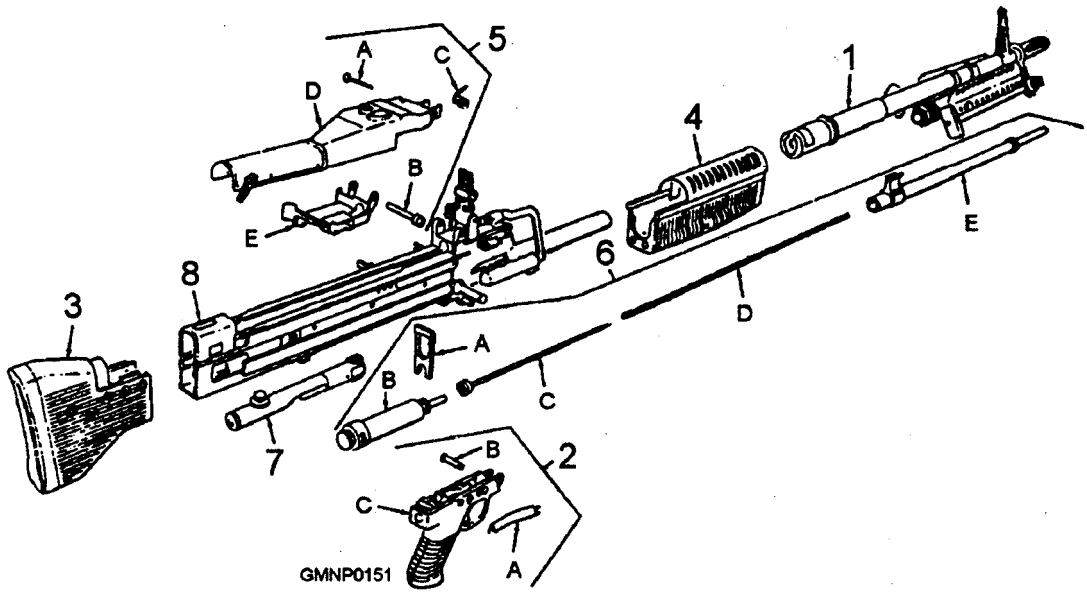

1—Barrel assembly w/bipod assembly
2—Trigger mechanism grip group
A—Leaf spring
B—Retaining pin
C—Trigger mechanism grip assembly
3—Shoulder stock
4—Forearm assembly
5—Cover assembly and cartridge tray assembly groups
A—Hinge pin latch
B—Hinge cover pin
C—Spring
D—Cover assembly
E—Cartridge tray assembly
6—Buffer assembly and operating rod assembly groups
A—Retaining buffer yoke
B—Buffer assembly
C—Driving spring guide assembly
D—Spring
E—Operating rod assembly
7—Bolt assembly
8—Receiver group

Figure 3-77.—Major groups and assemblies of the M60 machine gun.

The M60 machine gun can be disassembled into eight major groups and assemblies without the use of force or special tools. These groups and assemblies are shown in figure 3-77. Removal disassembly of all the groups and assemblies is not necessary for general disassembly. with the exception of the barrel assembly, all disassembly can be done with a driftpin or a similar pointed object.

General disassembly begins with the bolt forward, the cover closed, and the safety on SAFE. Before the weapon is disassembled, it must be thoroughly inspected to make sure it is unloaded. As the weapon is disassembled, place the parts (in the order in which they are removed) on a clean, flat surface. This reduces the possibility of loss of parts and aids in reassembly. The parts are replaced in reverse order. The nomenclature of each part is learned by naming it as it is removed and replaced

REMOVING THE STOCK— To remove the stock, raise the hinged shoulder rest and insert the nose of a driftpin into the latch hole, as shown in figure 3-78. With the latch depressed, remove the stock by pulling it directly to the rear.

REMOVING THE BUFFER GROUP.— The buffer assembly group consists of the buffer yoke and the buffer. To disassemble the group, hold the palm of the hand against the exposed buffer and press lightly. Remove the buffer yoke from the top of the receiver, as shown in figure 3-79. Withdraw the buffer slowly. Allow the drive spring to expand until the end of the drive spring guide is exposed at the rear of the receiver. Pull the buffer plunger from the drive spring guide (fig. 3-80).

REMOVING THE OPERATING GROUP.— The operating rod assembly group consists of the operating rod, the drive spring, the drive spring guide, and the bolt assembly. To remove the group, pull the

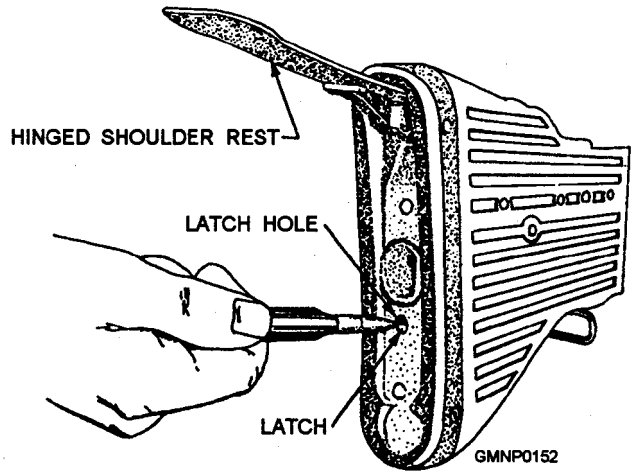

Figure 3-78.—Releasing the stock latch.

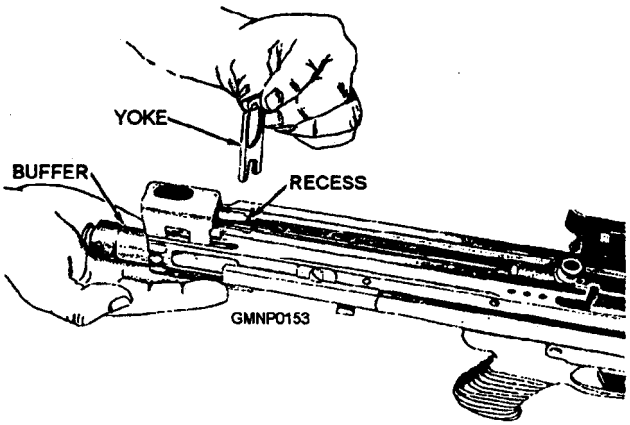

Figure 3-79.—Removing the buffer group.

drive spring guide and spring from the receiver and separate them. With the left hand, grasp the pistol grip and pull the cocking handle to the rear until the bolt is separated from the barrel socket. Continue to pull the operating rod and bolt to the rear by pulling the cam roller, as shown in figure 3-81, view A.

When the operating rod and bolt are exposed approximately 4 inches to the rear of the receiver, grasp them securely to prevent the bolt from "turning in," and remove them from the receiver (fig. 3-81, view B). Relax the grip and allow the bolt to rotate slowly. It is not necessary to separate the bolt from the operating rod.

REMOVING THE TRIGGER MECHANISM GROUP.— The trigger mechanism grip group consists of the trigger mechanism grip assembly (trigger housing, sear, sear pin, sear plunger, sear plunger spring, trigger pin, and trigger), the trigger housing pin (interchangeable with the sear pin), and the leaf spring. To remove the group, press in on the front of the leaf spring and rotate the front end down to clear it from the trigger housing pin, as shown in figure 3-82, view A.

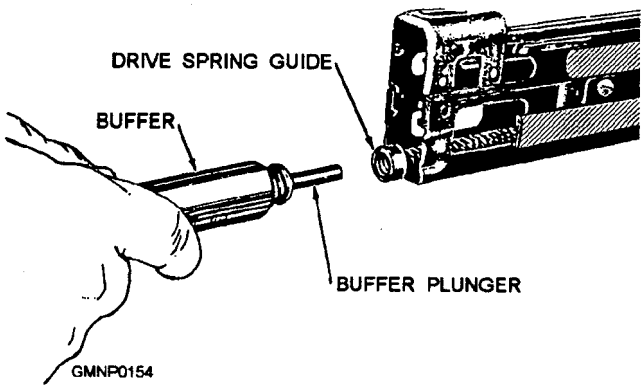

Figure 3-80.—Separating the buffer from the drive spring guide.

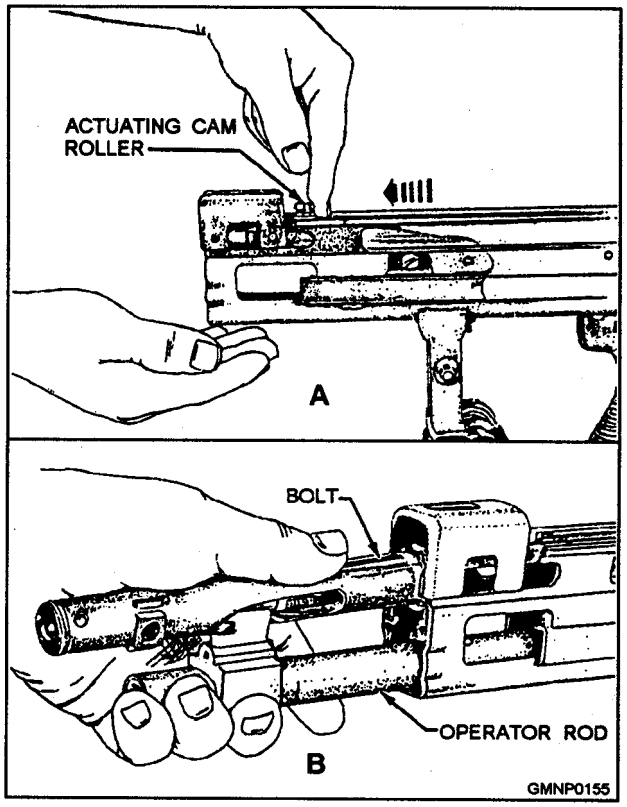

Figure 3-81.—Removing the operating group.

Pull forward to disengage the rear notch from the sear pin. Remove the trigger housing pin by pushing it to the left, Slide the trigger housing slightly forward, rotate

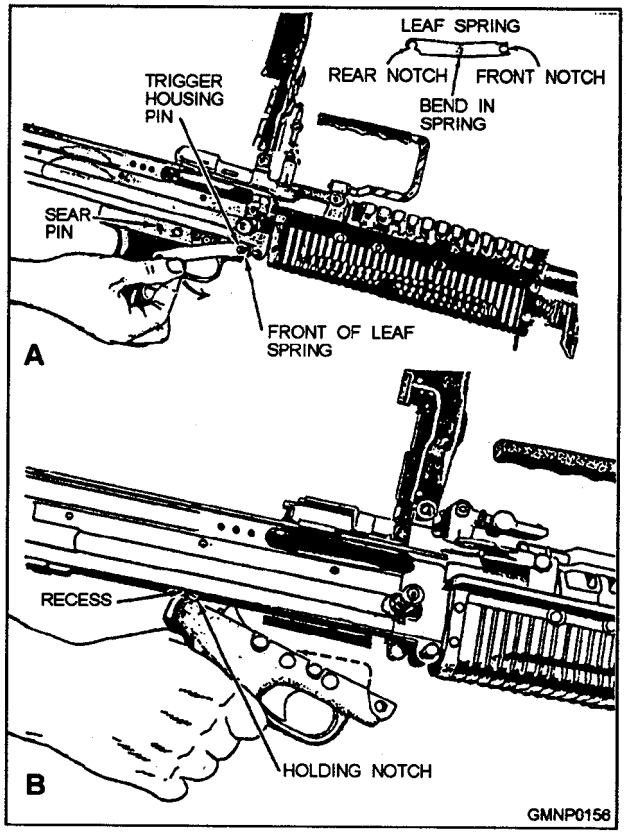

Figure 3-82.—Removing the trigger mechanism grip group.

the front of the housing down, and remove it (fig. 3-82, view B).

REMOVING THE BARREL ASSEMBLY.— The barrel assembly consists of the barrel, the flash suppressor, the front sight biped assembly, and the gas cylinder. To remove the assembly, raise the barrel lock lever to the vertical position and remove the barrel assembly by pulling it to the front, as shown in figure 3-83.

General disassembly to this point leaves the receiver group, the cover assembly and the cartridge tray assembly groups, and forearm intact, and is sufficient for general maintenance and cleaning of the M60 machine gun.

Assembly

The assembly procedures for the M60 machine gun are basically the reverse of the steps taken during disassembly. Starting with the receiver, each group and assembly are attached in the following manner:

1. Make sure the barrel lock lever is in the vertical position, as shown in figure 3-83. Insert the rear of the barrel under the barrel cover and align the gas cylinder nut with its recess in the forearm assembly. Lower the barrel lock lever.

2. Engage the holding notch of the trigger housing in its recess in the bottom of the receiver (fig. 3-82, view B). Rotate the front of the trigger housing up and align the holes of the trigger housing with the mounting bracket on the receiver. Insert the trigger housing pin from the left. Engage the rear of the leaf spring with the sear pin (fig. 3-82, view A). Make sure the leaf spring is positioned so that the bent portion is pressed against the side of the trigger housing. Rotate the front of the leaf spring up and engage it with the trigger housing pin.

3. Insert the end of the operating rod into the receiver. Hold the rod with one hand. With the other hand, push forward on the rear of the bolt, causing the bolt to rotate until the locking lugs are in the vertical position. With the cam roller up, push the operating rod and bolt into the receiver until the end of the operating rod is even with the rear of the receiver. Insert the drive spring guide into the drive spring; then insert the opposite end of the drive spring in the recess of the operating rod, as shown in figure 3-84. Pull the trigger and push in the drive spring until the head of the guide is approximately an inch from the receiver (fig. 3-80).

4. Insert the buffer plunger into the drive spring guide, as shown in figure 3-80. Push forward on the buffer until the operating rod and bolt go fully forward. Push in on the buffer until the recesses on the buffer are aligned with the recesses in the receiver. Replace the buffer yoke from the top of the receiver, as shown in figure 3-79.

5. Align the guide rails of the stock with the guide rails on the receiver. Push forward until the stock is fully seated. A distinct click will be heard when the latch engages.

6. To check for correct assembly, pull the cocking handle to the rear and return it to its forward position. Close the cover and pull the trigger. The bolt should go forward.

NOTE

The bolt must be in the rear (cocked) position to close the cover.

For further information on the M60 machine gun, refer to the Army's TM 9-1005-224-24 and TM 9-1005-24-10.

THE 20-MM MK 16 MOD 5 MACHINE GUN

The Mk 16 Mod 5 machine gun (fig. 3-85) is designed to be installed on board naval craft primarily for use against shore and surface targets. It is an

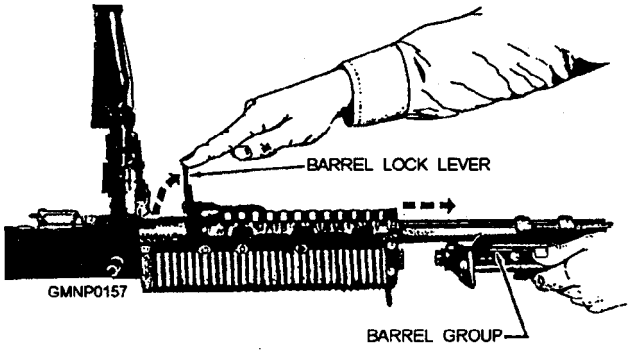

Figure 3-83.—Removing the barrel assembly.

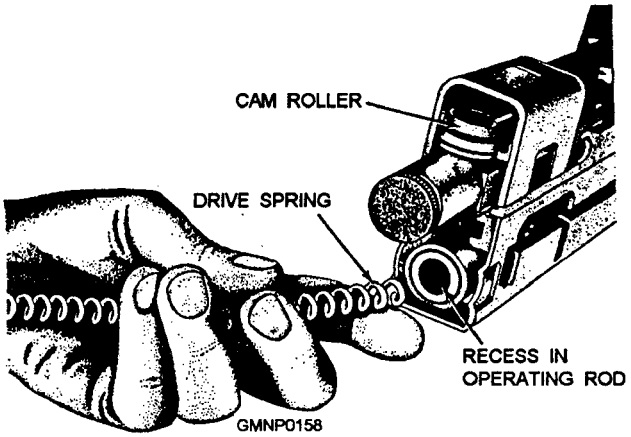

Figure 3-84.—Inserting the drive spring.

automatic, air-cooled weapon that is gas- and blowback operated. This gun is capable of firing 20-mm incendiary, armor-piercing, high-explosive ammunition at a maximum range of 7,000 yards. See table 3-3 for the other capabilities of this gun.

The principal components of the Mk 16 Mod 5 machine gun include the cradle, the gun barrel, the chamber lubricator, the recoil mechanism, the receiver, the breechblock, the sear mechanism magazine slide assembly, the rear buffer, the driving spring guide assembly, and the gas mechanism. Not all of these components are shown in figure 3-85 since they are located internally. This weapon is currently in limited use by the Navy and will most likely be replaced by the 25-mm gun over the next few years. Therefore, it will not be discussed in any further detail in this text.

Table 3-3.—Capabilities of the 20-mm Mk 16 Mod 5 Machine Gun

ITEMS	20-MM MACHINE GUN MK 16 MOD 5
Rate of fire	650-800 rounds per minute
Type of fire	Automatic (short bursts)
Range	7,000 yards maximum
Type of ammunition	Cartridges, APT M95 Cartridges, INC M96 Cartridges, TP M99 Cartridges, HEI M97
Power requirements	None
Mode of fire	Manual

THE 25-MM M242 AUTOMATIC GUN

The M242 is considered a minor caliber gun. The 25-mm M242 automatic gun (fig. 3-86) is a short-range,

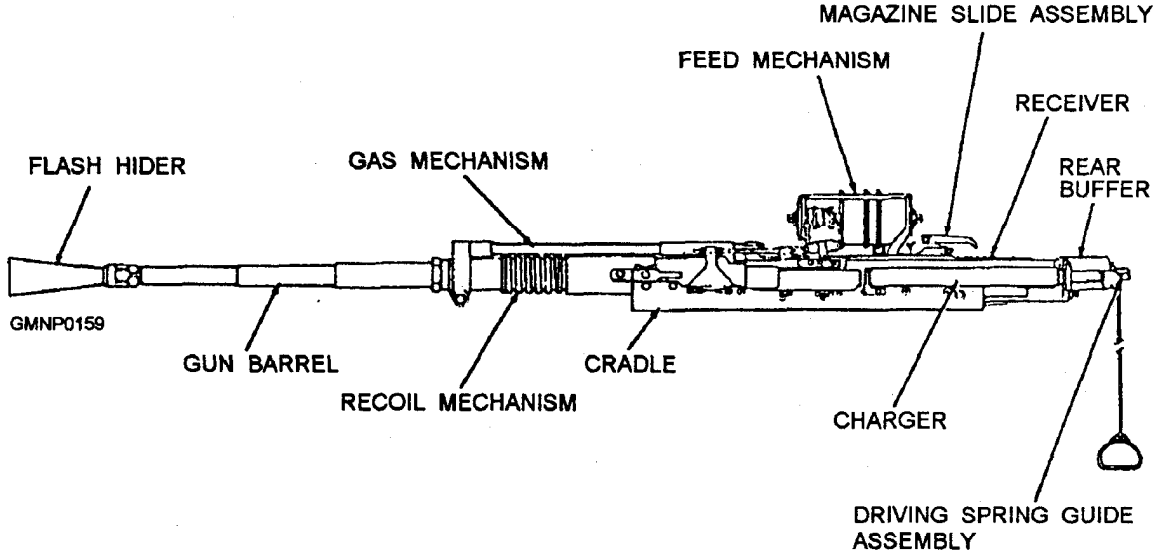

Figure 3-85.—20-mm Mk 16 Mod 5 machine gun.

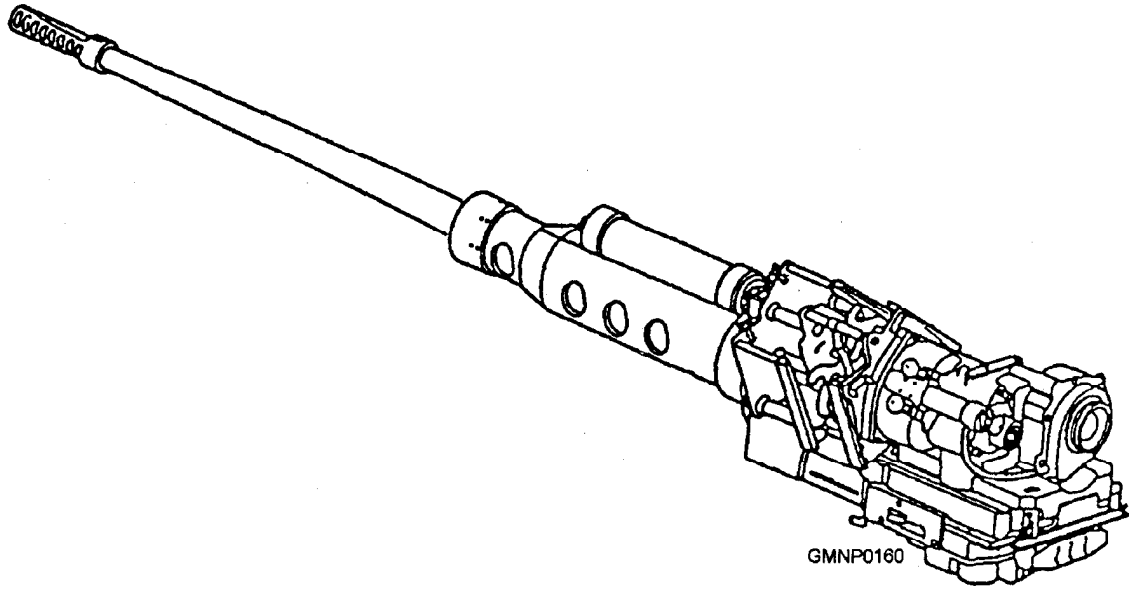

Figure 3-86.-25-mm M242 automatic gun.

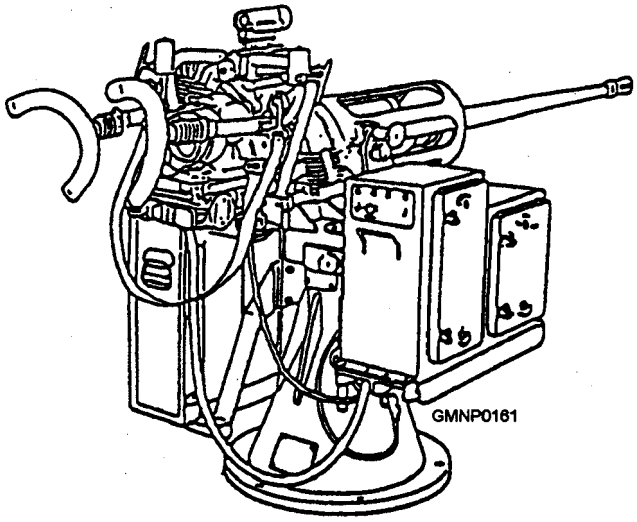

Figure 3-87.—The Mk 38 Mod 0 machine gun system.

up to 2,700 yards, surface-to-surface weapon, designed for use aboard naval vessels operating in coastal and inland areas. The gun is mounted on the Mk 88 Mod 0 machine gun mount to form the Mk 38 Mod 0 machine gun system (fig. 3-87).

Gun operation is powered by an electric motor. The power supply is a 24-volt battery located externally to the gun. The electric motor, attached to the bottom of the receiver, drives all the moving parts of the gun. The gun consists of three major components-the feeder assembly, the receiver, and the barrel (fig. 3-88).

Driven by the electric motor, the feeder assembly transfers linked ammunition from the feed chute, strips rounds from links, places rounds onto the bolt face, and removes spent cartridge cases from the bolt. The M242 is often refereed to as a "chain gun" due to the design of the bolt mechanism. As shown in figure 3-89, the bolt

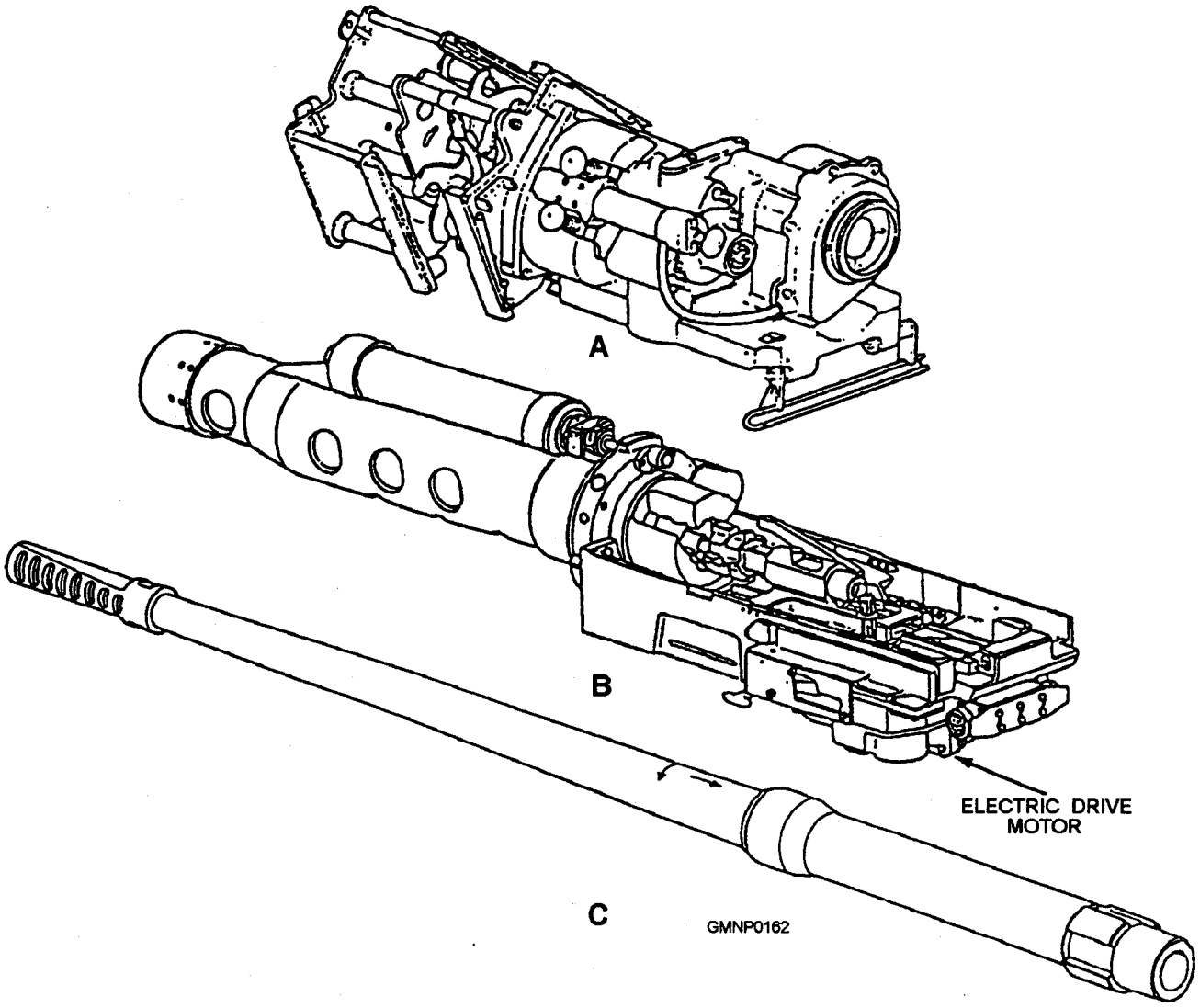

Figure 3-88.—M242 major components: A. Feeder assembly B. Receiver; C. Barrel.

is operated by a chain that is driven by the electric motor. The chain master link includes the slider that fits into a perpendicular track on the bottom of the bolt carrier. As the chain is driven around the track, the slider moves the bolt forward and rearward with a dwell time at each position. The forward dwell time allows propellant gases to disperse after firing while the rear dwell time allows for the spent case to be ejected and a new cartridge inserted.

GRENADE LAUNCHERS

LEARNING 0BJECTIVE: Describe the controls, safeties, and operation of the M79 and Mk 19 Mod 3 grenade launchers.

The Navy currently uses two types of grenade launchers-the M79 and the Mk 19 Mod 3 machine gun.

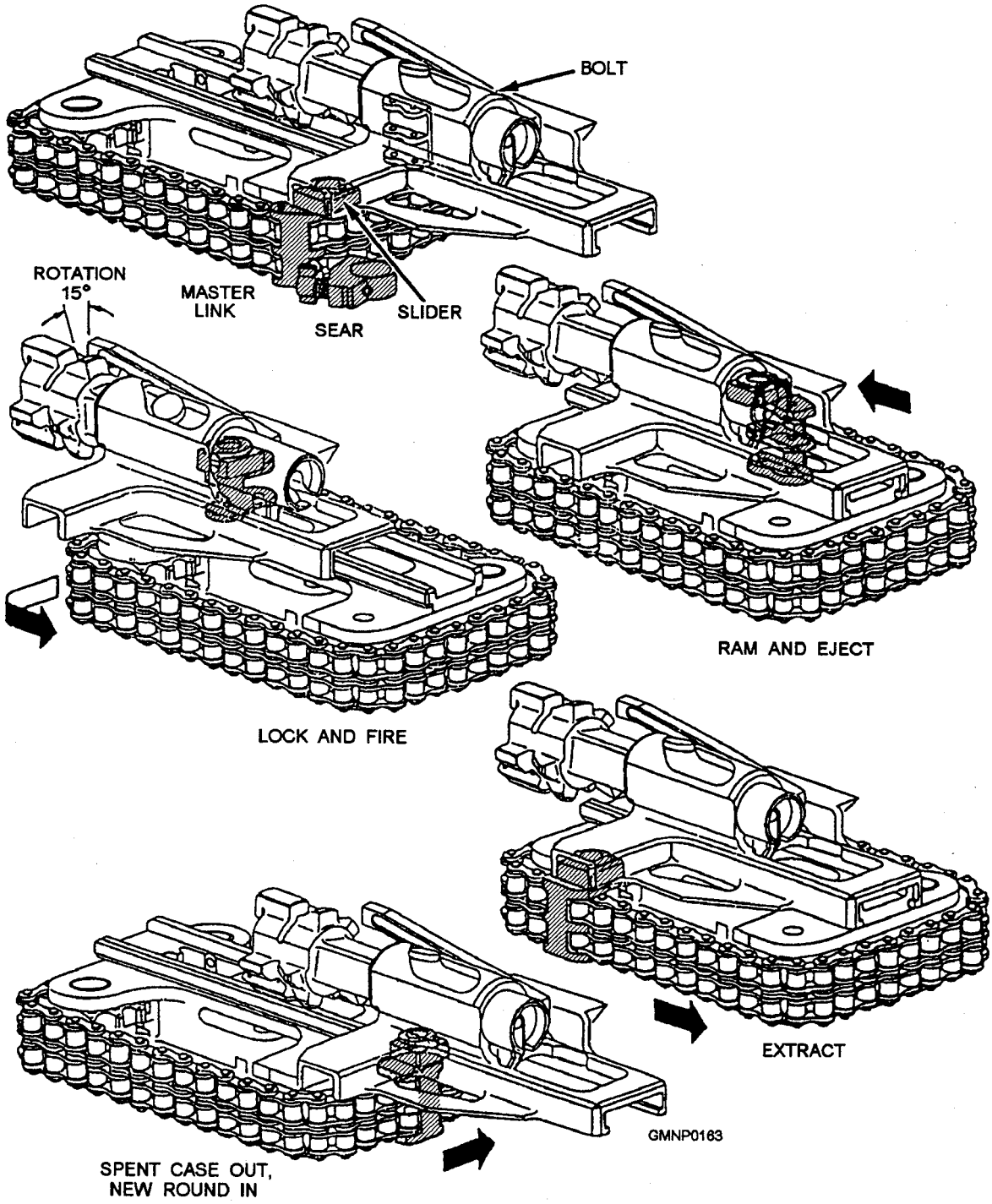

Figure 3-89.—M242 bolt 0peration.

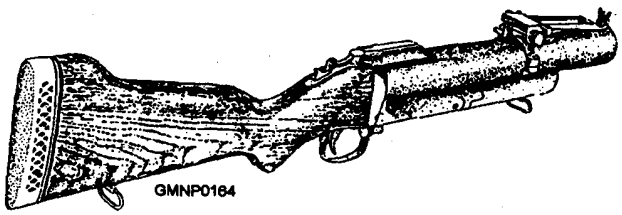

Figure 3-90.—M79 grenade launcher.

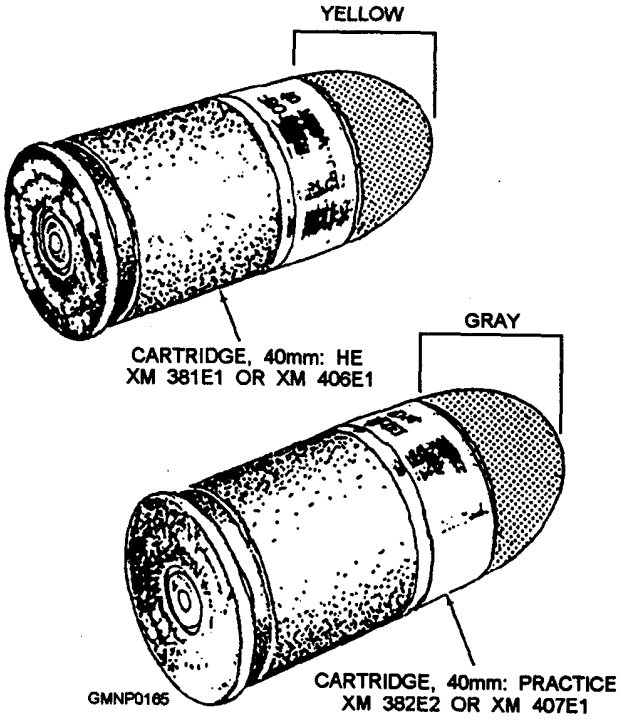

Figure 3-91.—Cartridges used with the M79 grenade launcher.

Both fire 40-mm grenade ammunition. However, the ammunition is not interchangeable. The linked rounds for the Mk 19 Mod 3 have a longer casing than those intended for use in the M79.

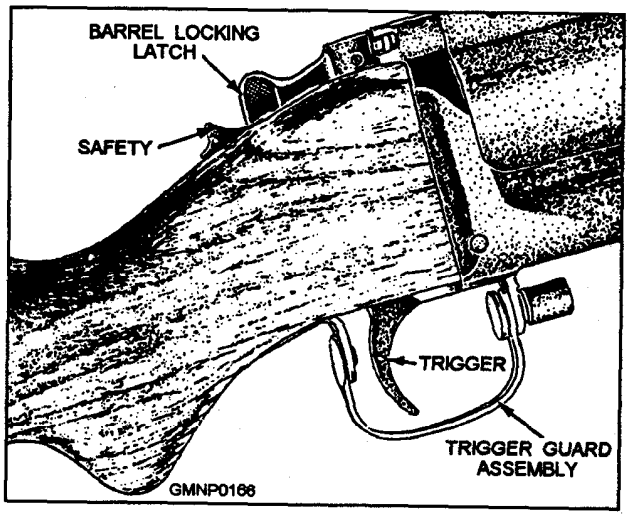

Figure 3-92.—Grenade launcher controls.

40-MM M79 GRENADE LAUCNHER

The M79 grenade launcher (fig. 3-90) is a break-open, single-shot weapon. It is breech loaded and chambered for a 40-mm metallic cartridge case with an internal primer. Cartridges used with the M79 grenade launcher are shown in figure 3-91.

Controls of the M79 Grenade Launcher

The safety (fig. 3-92) is in the SAFE position when pulled all the way back and in the FIRING position when pushed all the way forward

The barrel locking latch (fig. 3-92), when pushed all the way to the right, permits the breech end of the barrel to be swung up into the OPEN position. The grenade launcher cocks as it opens.

The trigger guard (fig. 3-92) is shown in lowered position. It can be released for setting to one side or the other by pushing back the cylindrical housing at the front. This makes it possible for a person wearing heavy gloves or mittens to fire the grenade launcher. The

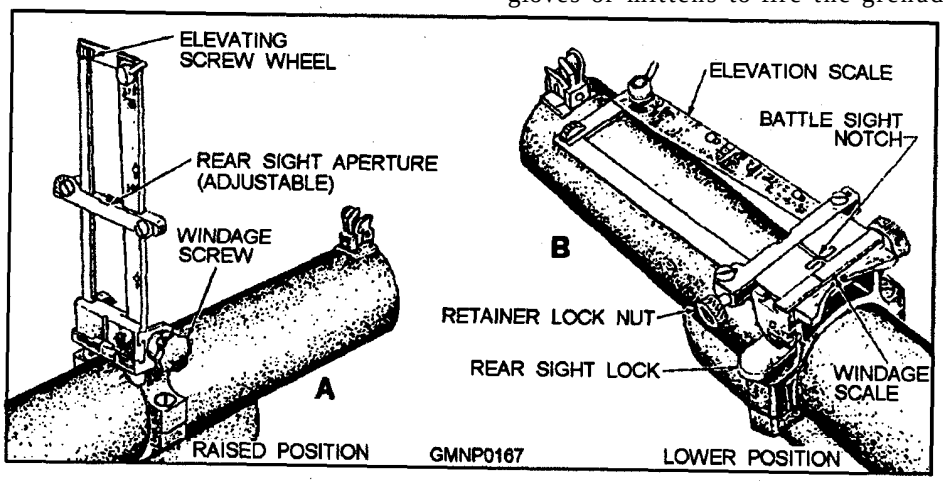

Figure 3-93.—Rear sight assembly.

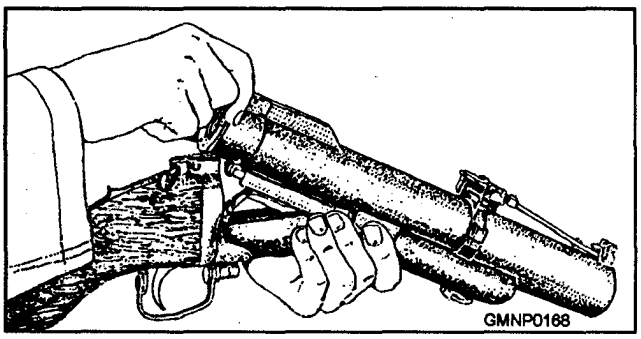

Figure 3-94.—Loading the M79 grenade launcher.

sighting equipment for the launcher is shown in figure 3-93.

Operating the M79 Grenade Launcher

The following procedures should be followed when loading and firing the M79 grenade launcher.

PREPARATION FOR FIRING.— Check the bore to be sure it is free of foreign matter or obstructions. Check all ammunition to be sure the proper type and grade are being used. Check the launcher to be sure it is properly cleaned. Inspect it for malfunction and other defects.

LOADING.— Point the muzzle of the launcher at the ground and clear the area of all personnel.

Move the barrel locking latch all the way to the right and break open the breech. If the safety is not already on SAFE, this procedure will cause it to move to SAFE, provided that the barrel locking latch is moved to its full limit of travel.

Insert the projectile portion of the ammunition into the chamber opening (fig. 3-94) and push the complete round forward into the chamber until the extractor contacts the rim of the cartridge case. Close the breech.

FIRING.— When the launcher is fired, you must be in either a standing or prone position. In the standing position, the butt is placed against the shoulder. In the prone position, the butt is placed against the ground. (See figs. 3-95 and 3-96.)

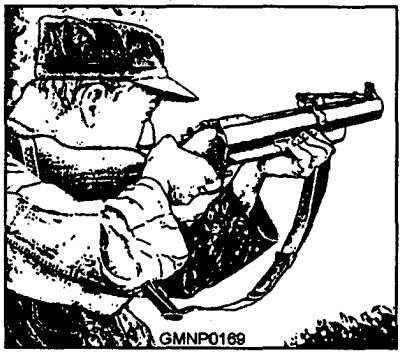

Figure 3-95.—Firing the M79 from the standing position.

Figure 3-96.—Firing the M79 from the prone position.

A detailed discussion of sight setting is beyond the scope of this course. However, to engage targets at ranges from 50 to 80 meters (165 to 265 feet), you should place the rear sight frame assembly in the lowered (called the "battle sight") position (fig. 3-93). Longer ranges are fired with the rear sight frame in the upright position (fig. 3-93) and the sight aperture bar set at the approximate target range of the scale. TM 9-1010-205-10 provides detailed instruction on the use of the sights of the launcher.

When firing grenades at targets within battle sight ranges (50 to 80 meters or 165 to 265 feet), the operator must be in a protected position. Targets that are within 80 meters (265 feet) of friendly troops must not be fired upon.

Field Stripping the M79 Grenade Launcher

Field stripping the M79 grenade launcher consists of separating the fore-end assembly from the barrel and receiver group and separating the stock from the receiver group.

To remove the fore-end assembly, first use the wrench assembly shown in figure 3-97 to remove the

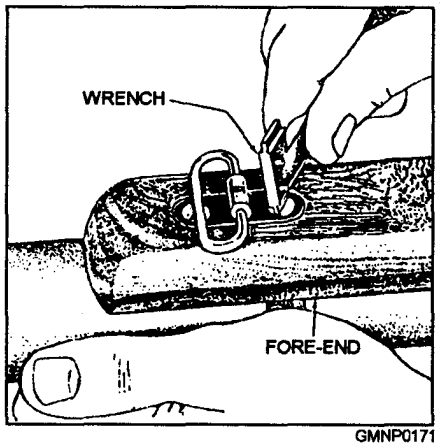

Figure 3-97.—Removing the fore-end assembly retainer screw.

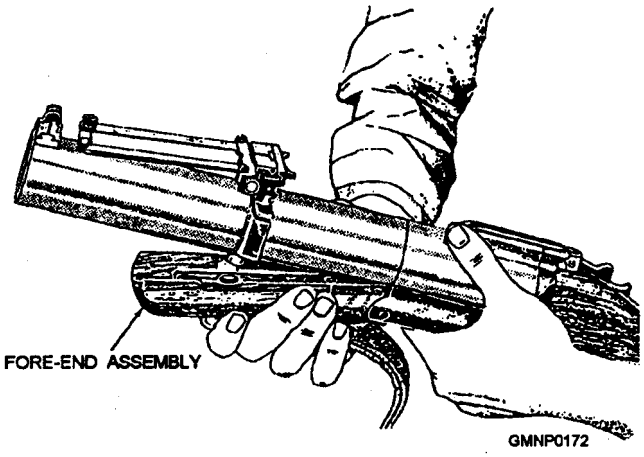

Figure 3-98.—Removing the fore-end assembly.

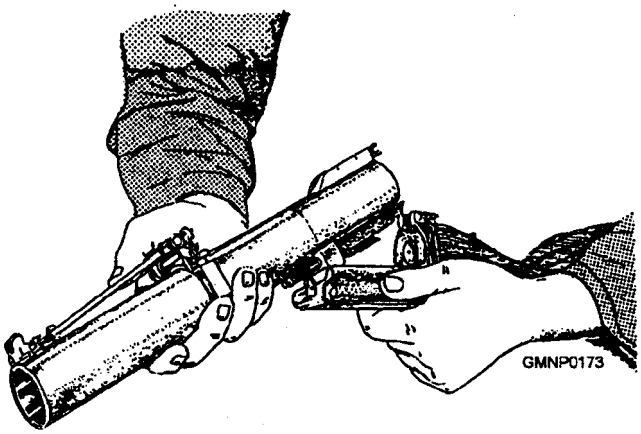

Figure 3-99.—Removing the barrel group.

machine screw shown in the same figure. Then pull the front end of the fore-end assembly away from the barrel, as shown in figure 3-98, until the lug on the rear sight base is clear of the hole in the upper surface of the fore-end bracket. Keeping the lug clear of the hole, pull

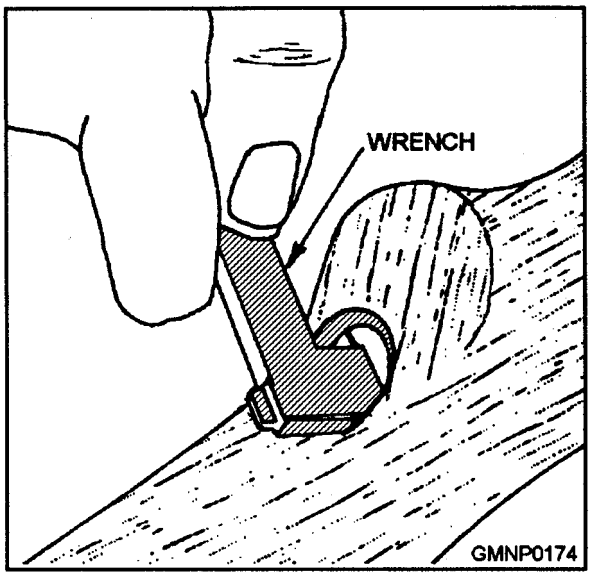

Figure 3-100.—Removing receiver group attaching screw.

forward on the fore-end assembly until it is free of the receiver assembly.

Tb remove the barrel group from the receiver group, first actuate the barrel locking latch and open the breech. Then, holding the stock and receiver stationary, move the barrel rearward in the receiver until it is disengaged from the fulcrum pin, as shown in figure 3-99. Separate the barrel from the receiver group.

To separate the stock from the receiver group, use a combination wrench assembly, as shown in figure 3-100, and remove the pin-headed machine screw that secures the stock to the receiver group.

For further information on the M79 grenade launcher, refer to U.S. Army TM 9-1010-205-24 and TM 9-1010-205-10.

MK 19 MOD 3 MACHINE GUN

The Mk 19 Mod 3 machine gun (fig. 3-101) fires a 40-mm grenade with antipersonnel fragmentation and

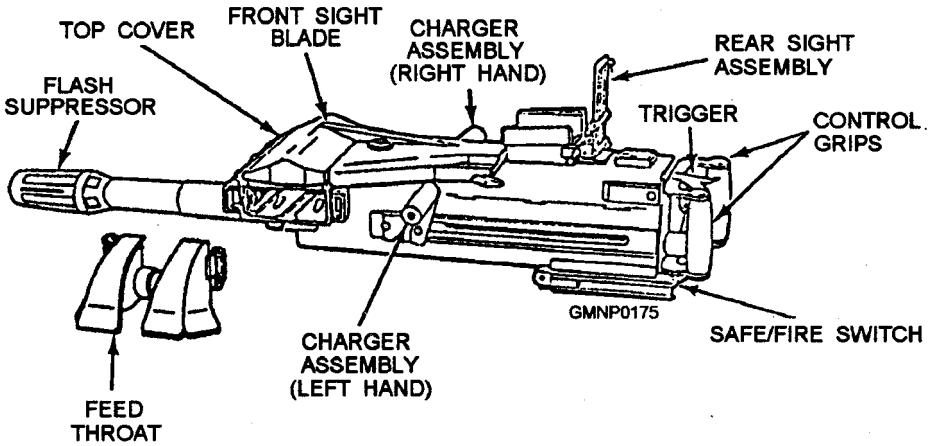

Figure 3-101.—Mk 19 Mod 3 machine gun.

light armor-piercing capability. It is an air-cooled, belt-fed, blowback-operated, fully automatic weapon. The Mk 19 Mod 3 machine gun is found on riverine craft and surface vessels that are tasked to operate in confined waters, such as the Persian Gulf.

Major Components

The Mk 19 Mod 3 machine gun has five major components, as shown in figure 3-102. These are the receiver assembly, the feed slide assembly and tray, the top cover assembly, the sear assembly, and the bolt and backplate assembly.

RECEIVER ASSEMBLY.— The receiver assembly (fig. 3-102, 1) provides support for the other major assemblies of the weapon.

FEED SLIDE ASSEMBLY AND TRAY.— The feed slide assembly and tray (fig. 3-102, 2) holds the rounds in the feeder and indexes ammunition into the firing position.

TOP COVER ASSEMBLY.— The top cover assembly (fig. 3-102, 3) holds the feed slide assembly and tray. It is opened by a latch (left side) for loading or to clean and inspect the weapon.

SEAR ASSEMBLY.— The sear assembly (fig.3-102, 4) holds the receiver sear. Trigger action depresses the sear, releasing the bolt and allowing the bolt to move forward for firing. The safety is attached to the sear assembly. When the safety slide is activated, it blocks the sear from being depressed by the operator as long as the safety is on S (SAFE).

BOLT AND BACKPLATE ASSEMBLY.— Located on the bolt and backplate assembly (fig. 3-102, 5) is the handgrips and the trigger. When the trigger is depressed, it operates the sear assembly that releases the bolt for firing. The bolt is driven forward by a duel set of operating springs set around guide rods.

Operational Sequence

As described in the U.S. Army TM 9-1010-230-10, the operation of the Mk 19 Mod 3 machine gun can be broken down into three functions-loading/charging, firing, and recoil/ejecting.

LOADING/CHARGING.— To begin operation of the Mk 19 Mod 3 machine gun with the weapon on SAFE and the bolt in the forward position, raise the top cover and load 40-mm ammunition into the feeder, as

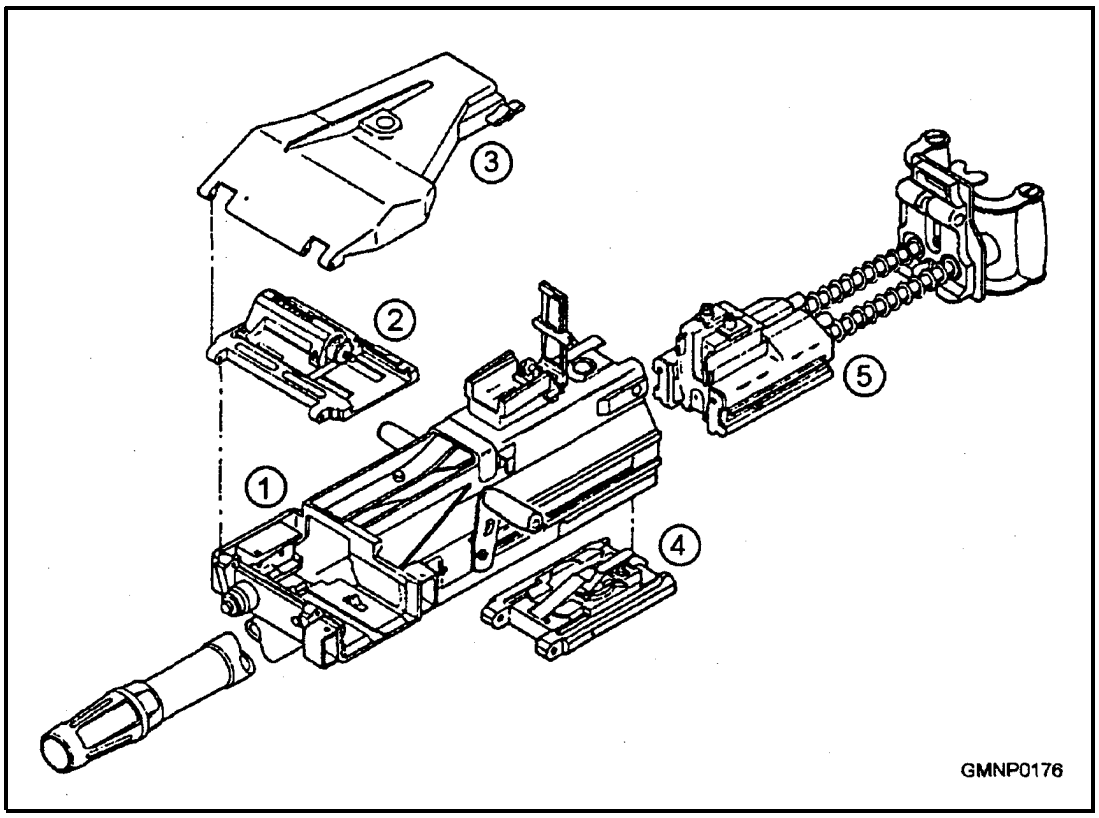

Figure 3-102.—Major components of the Mk 19 Mod 3 machine gun.

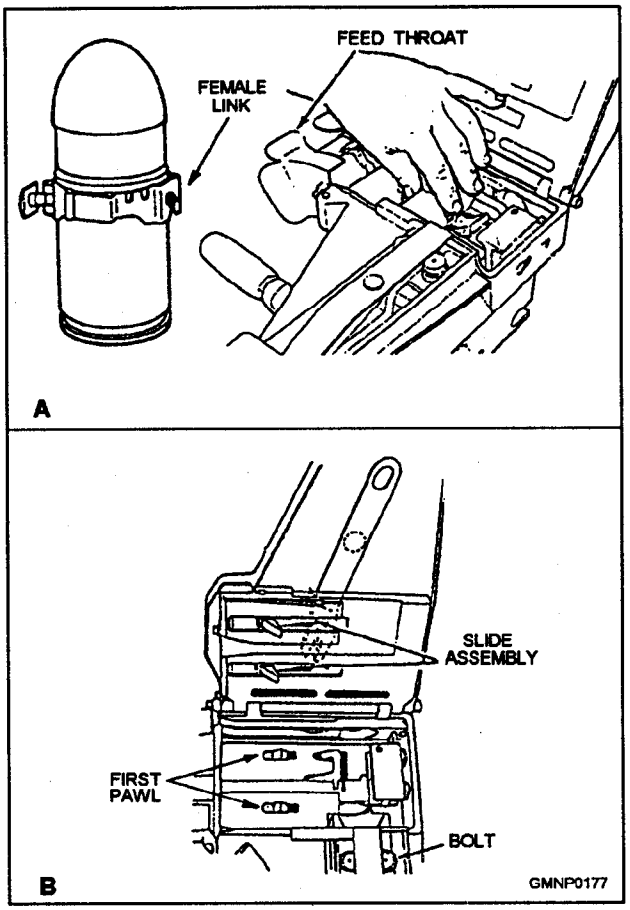

Figure 3-103.—Loading the Mk 19 Mod 3 machine gun.

shown in figure 3-103. With the female link first, feed the belted 40-mm ammunition through the feed throat (fig. 3-103, view A) and into the feeder and across the first pawl (fig. 3-103, view B). Now, move the slide assembly to the left and close and latch the top cover.

To charge the weapon, grasp the charger handles with palms down, as shown in figure 3-104, depress the charger handle leeks, and rotate the handles down. Then pull the charger handles sharply to the rear. When you

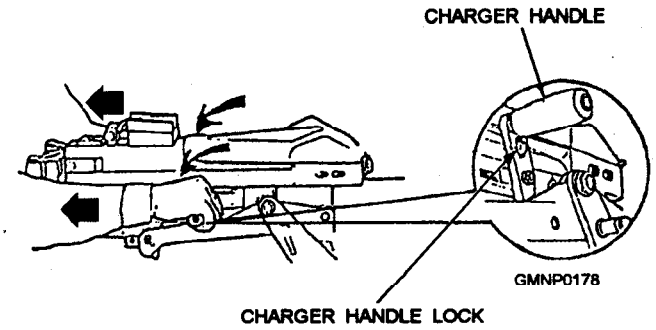

Figure 3-104.—Charging the Mk 19 Mod 3 machine gun.

feel the bolt latch in the rear position, push the charger handles forward and up into the locked position.

To load the first round, place the safety in the FIRE position and press the trigger. The bolt will spring forward and the first round will be loaded on the bolt face in the extractors. This is called the half-load position.

Depress the charger handle locks and pull the charger handles to the rear a second time to load around into position for firing (full-load). Pulling the bolt back a second time (fig. 3-105) delinks the round from the belt. The curved rail on the vertical cam assembly forces the round down the bolt face, out of the extractors, and into the bolt fingers.

FIRING.— With the weapon in the full-load condition, pressing the trigger causes the receiver sear to release the bolt. The recoil springs force the bolt forward (fig. 3-106). As the bolt travels forward, the cocking lever is released and the bolt sear strikes the receiver plate, pushing it rearward. This movement of the bolt sear releases the firing pin, which strikes the primer and fires the round.

RECOIL/EJECTING.—As a round is fired, recoil pressure from the burning propellant acts to force the bolt rearward (fig. 3-107). As the bolt moves rearward,

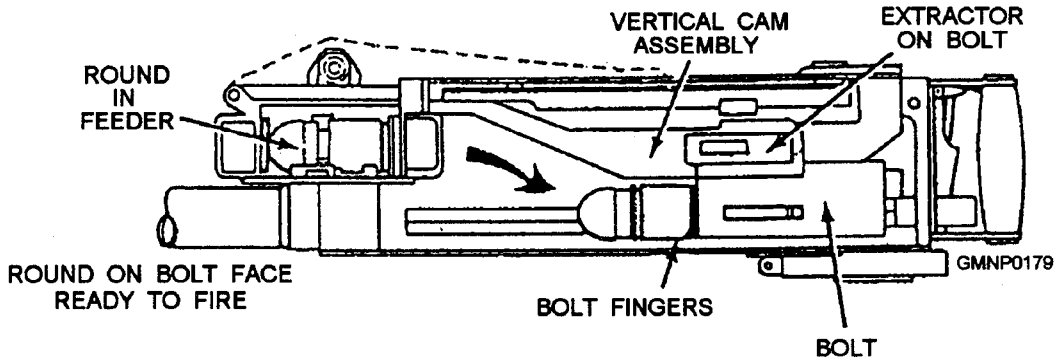

Figure 3-105.—MIK 19 Mod 3 machine gun loading operation.

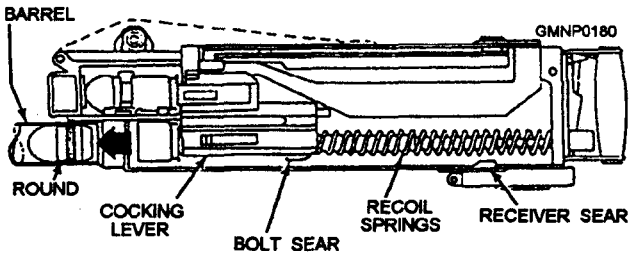

Figure 3-106.—Mk 19 Mod 3 machine gun firing sequence.

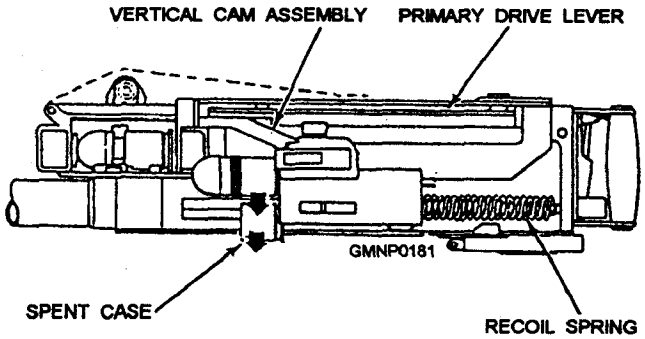

Figure 3-107.—Mk 19 Mod 3 machine gun recoil and ejecting sequence.

it extracts the spent cartridge, cams the next round down the bolt face, which forces the spent cartridge out the bottom of the gun, and moves the feeder drive levers to move the next round into position for delinking. Firing will continue automatically as long as the trigger is depressed. When the trigger is released, the bolt is held in the rear position by the sear assembly with a round in the bolt fingers.

The Mk 19 Mod 3 machine gun should be kept clean and lubricated as prescribed in the U.S. Army TM 9-1010-230-10 and the appropriate Navy 3-M Systems MRCs. Detailed disassembly, cleaning, and troubleshooting procedures are also found in these two sources.

SUPPORT WEAPONS

LEARNING OBJECTIVE Discuss and identify the weapons used to support the Seabees and special boat units.

As a GM you may be assigned to a Seabee or a special boat unit. These units have several support weapons that are not normally found in the fleet. In this section we will briefly discuss the M203, the LAW, and the 81-mm mortar.

40-MM GRENADE LAUNCHER, M203

When the M16A1 rifle is equipped with the grenade launcher, it becomes the 40-mm grenade launcher, M203, and loses its identity as the M16A1 rifle (fig. 3-108). As a GM attached to the Seabees as the armorer, you may have to assemble the launcher attachment on the M16. As a member of a landing or boarding party or special boat unit, you will have the responsibility of the employment, the trajectory, the method of firing, the firing effects, the malfunctions, and the care and cleaning of the launcher attachment.

The 40-mm grenade launcher (M203), mounted on the M16A1 rifle, is a lightweight, compact, breech-loading, pump-action (sliding-barrel), single-shot, manually operated weapon.

The launcher is approximately 16 inches in overall length. It weighs approximately 3.6 pounds loaded; 3 pounds unloaded It has a maximum range of 400 meters. Its area target range is 350 meters; its point

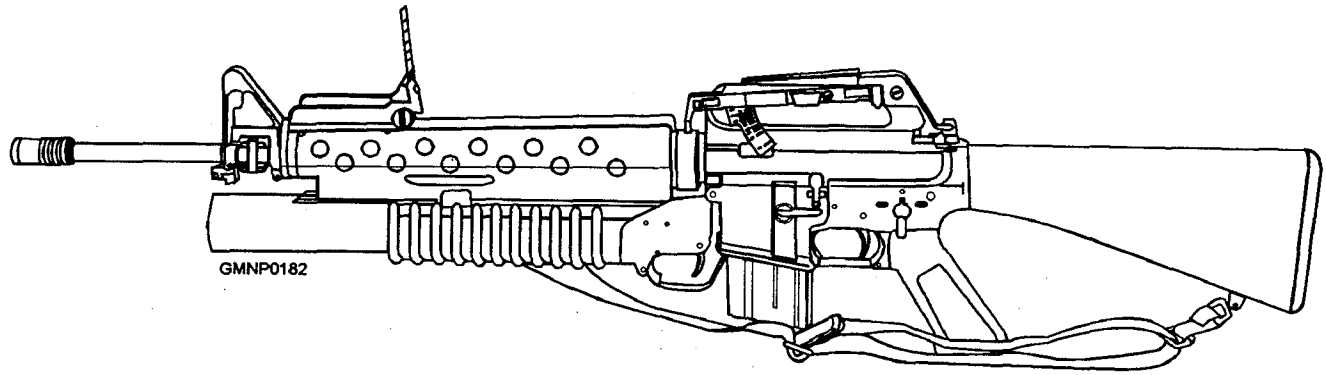

Figure 3-108.—40-mm grenade launcher, M203, mounted on the M16A1 rifle.

target range is 150 meters. The launcher consists of a handguard and sight assembly group, a receiver assembly, a quadrant sight assembly, and a barrel assembly (fig. 3-109).

Handguard and Sight Assembly Group

The handguard portion of the assembly group (refer to fig. 3-109) is a molded plastic protective cover that fits over the barrel of the M16A1 rifle. The cover prevents the operator from coming in contact with the barrel when it becomes heated from rapid firing. The heat produced by the rifle barrel dissipates through the ceding holes and slots on the cover. The protruding plastic tab on the left side of the cover prevents the barrel latch of the grenade launcher from being accidentally pressed when the weapon is laid on its side.

The sight leaf portion of the assembly group is a metallic folding blade sight. It provides range selection from 50 to 250 meters in 50-meter increments. The windage adjustment screw moves the blade element horizontally, providing a windage adjustment capability. The elevation adjustment machine screw, when loosened, allows the blade element to be moved vertically, providing an elevation adjustment capability.

Receiver Assembly

The receiver assembly (fig. 3-109) consists of an aluminum receiver that houses the barrel latch, the barrel stop, and the firing mechanism. The receiver assembly attaches to the barrel of the rifle, mounting the grenade launcher to the rifle. The receiver assembly also contains the follower assembly, the trigger, and the safety components that serve to fire or prevent accidental firing of the grenade launcher.

The safety is just forward of the trigger, inside the trigger guard. The safety must be in the forward position (fig. 3-109) to fire the launcher. The safety must be in the most rearward position to place the launcher on safe. The safety must be placed manually in either of these positions.

The barrel latch, when depressed, unlocks the barrel so that it can be moved forward along the receiver assembly. As the barrel and barrel extension (which are interlocked with the cocking lever) move forward, the cocking lever is forced downward. The cocking lever, in turn, forces the spring-loaded tiring pin rearward. At the same time, the spring-loaded follower follows the barrel extension forward. As the barrel continues its

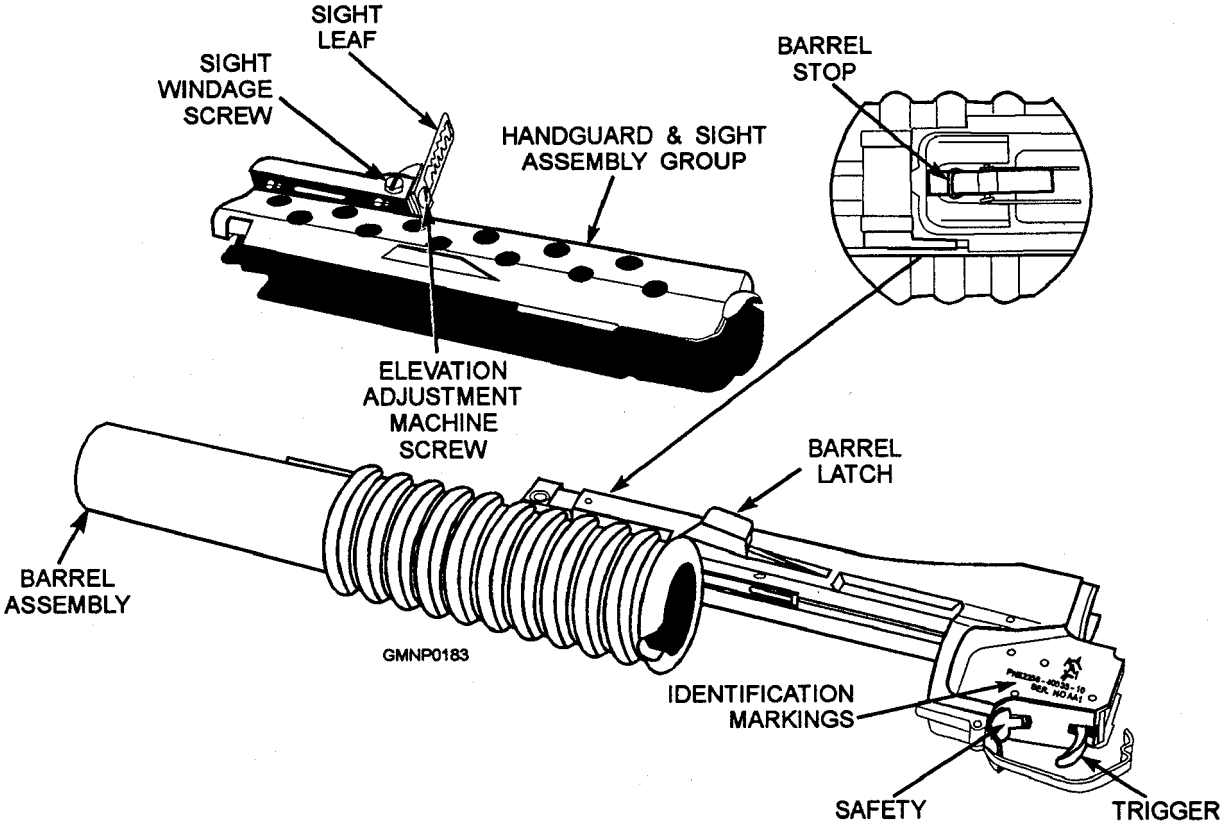

Figure 3-109.—40-mm grenade launcher, M203, controls and their identifications.

forward movement, the barrel extension disengages from the cocking lever. The movement of the follower is restricted by the receiver; the follower holds the cocking lever in the DOWN position. When the barrel is moved rearward, the follower is driven rearward, the cocking lever again engages the barrel extension, and the firing pin moves slightly forward and engages the sear.

The barrel stop (fig. 3-109) limits the forward motion of the barrel assembly. This prevents the barrel assembly from sliding off the receiver assembly barrel track during loading and cocking operations. When the barrel stop is depressed, it allows the barrel assembly to be removed from the receiver assembly for maintenance.

Quadrant Sight Assembly

The M203 has a quadrant sight assembly (fig. 3-110), which connects to the carrying handle of the M16 rifle. It consists of a sight arm, a range selection quadrant, and mounting brackets. The sight arm contains an aperture and post for sighting operations of the launcher. The range selection quadrant has embossed range graduations from 50 to 400 in 25-meter increments. The quadrant sight is used at ranges in excess of the 250 meters that is covered by the leaf sight. The 25-meter increments also allow for better accuracy at a greater number of range variations than the leaf sight.

Barrel Assembly

The barrel (refer to fig. 3-109) of the barrel assembly is constructed of specially treated and machined aluminum. The barrel extension is a rectangular, chrome-plated steel bar. It attaches to the barrel and provides a means of attaching the barrel to the receiver assembly. The handgrip is a molded plastic corrugated sleeve. When the grenade launcher is being fired, the plastic handgrip allows the Operator to hold the launcher without any discomfort from the heat.

66-MM LIGHT ANTITANK WEAPON SYSTEM, M72 SERIES (LAW)

The LAW is a lightweight, self-contained antitank system, consisting of a rocket packed within its own launcher. It is considered ammunition, rather than an individual arm, and is designed to be carried and used by designated personnel in addition to their individual weapons. The LAW will provide increased firepower against targets, ranging from personnel to heavy tanks.

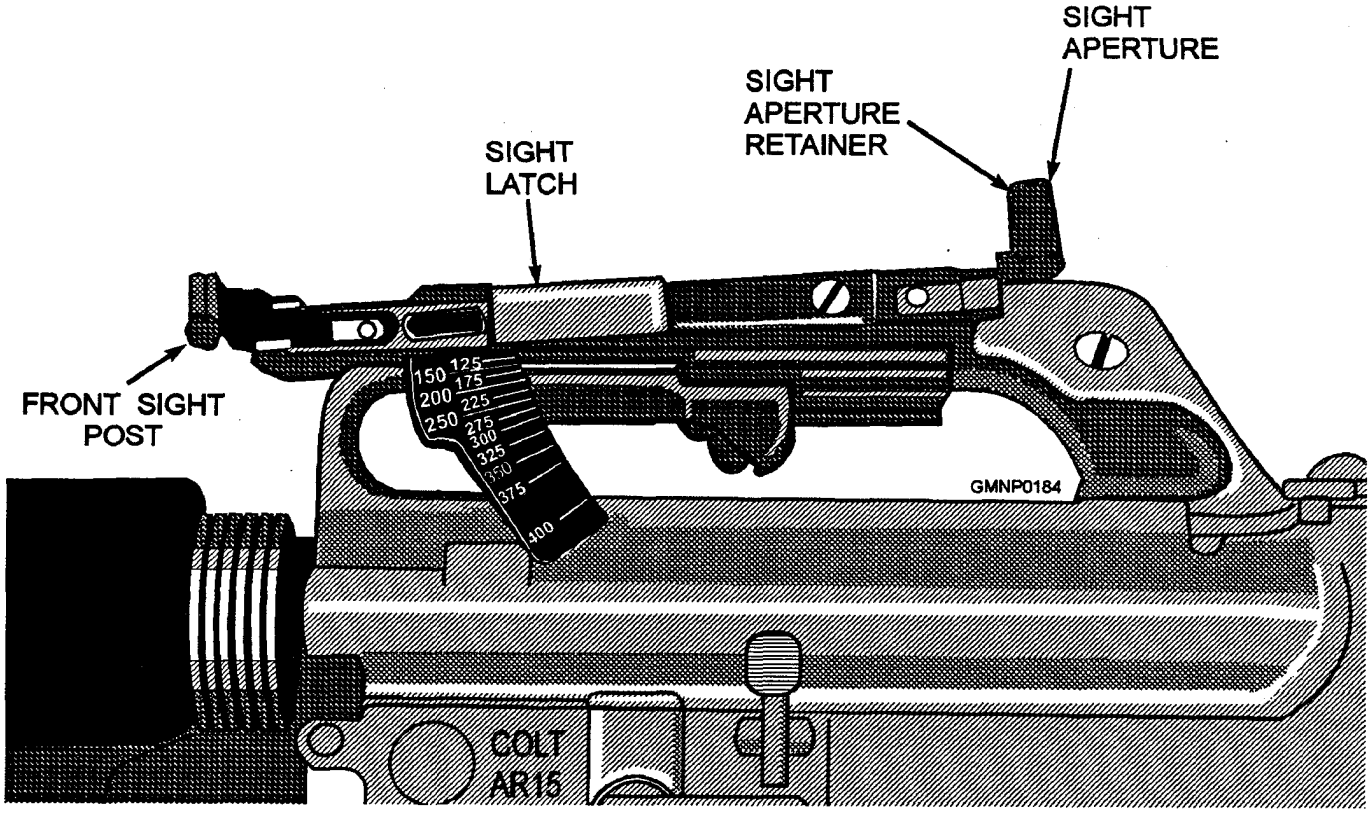

Figure 3-110.—Quadrant sight assembly.

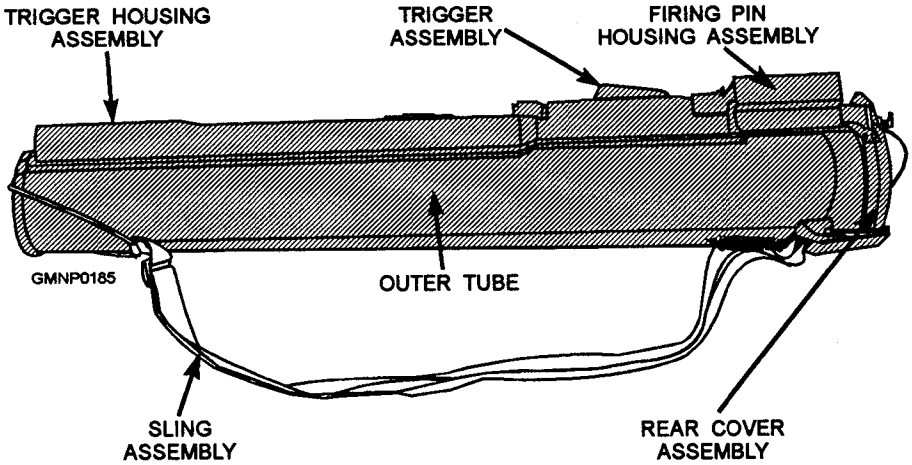

Figure 3-111.—M72A1 rocket launcher in CLOSED position.

When the launcher is issued, it serves as a watertight packing container for the rocket (fig. 3-111); however, when the launcher is placed in the FIRING position fig. 3-112), it serves to ignite and guide the rocket on its initial flight toward the target. Once the launcher is fired, it is designed to be discarded.

81-MM MORTAR

The 81-mm mortar (fig. 3-113) is a smooth-bore, muzzle-loaded, high-angle-of-fire weapon. It consists of a mortar barrel with a baseplug and a fixed firing pin for drop firing. The mount consists of a biped with traversing and elevating mechanism. A spring type of shock absorber absorbs the shock of recoil in firing. The baseplate is a unit that supports and aligns the mortar. For firing, the baseplug of the barrel is passed through the yoke of the biped mount, secured to the shock absorber and mounted into the baseplate. For transporting, disassemble the mortar into three groups: barrel, biped, and baseplate. A telescope sight, the M53, is provided for adjusting elevation and direction. The mortar can be hand carried as three separate one-man loads.

The mortar is fired by inserting a complete round into the muzzle, fin assembly down. The elevation of the barrel causes the round to slide toward the base of the barrel. On reaching the base, a propelling charge on the round is ignited by the firing pin. The pressure of the gas produced by the burning propelling charge drives the round up and out of the barrel. The fin assembly stabilizes the round in flight.

The mortar can deliver fire at ranges up to approximately 4,737 meters. The sustained and

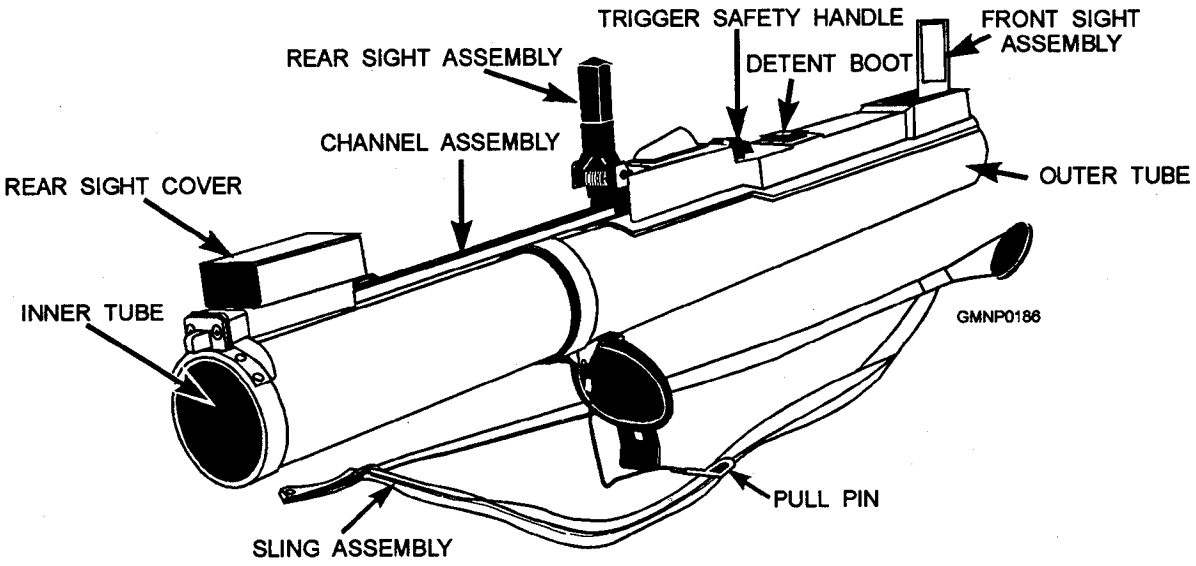

Figure 3-112.—M72A1 rocket launcher in OPEN position.

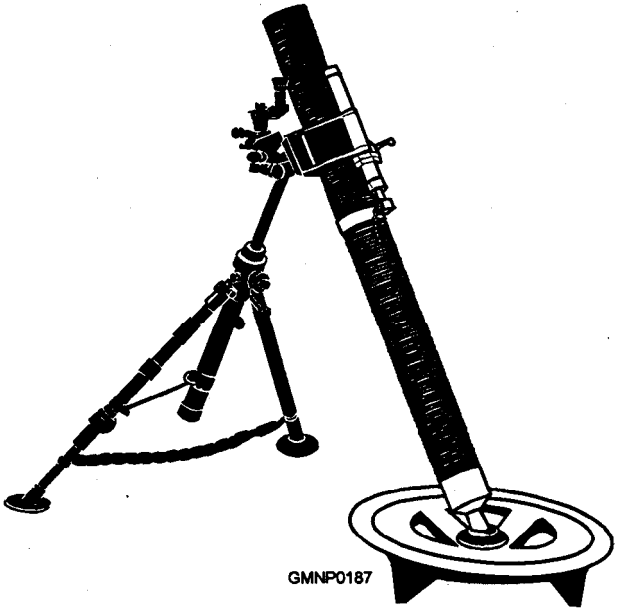

Figure 3-113.—The 81-mm mortar M29.

maximum rates of fire are related to the type of round and charge being used.

The complete mortar weighs 93 pounds. This includes the barrel (28 pounds), the biped (40 pounds), and the baseplate (25 pounds). The overall length is 51 inches and the maximum width is 21.6 inches.

A variety of shells and fuzes have been developed to make the 8 l-mm mortar a versatile weapon. It can be used as either an offensive or a defensive weapon.

SPECIAL PRECAUTIONS FOR SMALL ARMS

LEARNING OBJECTIVE: Discuss the special safety precautions that every Gunner's Mate should know before handling small arms.

Semiautomatic pistols in the hands of inexperienced or careless persons are largely responsible for the saying, "It's always the unloaded gun that kills." It is a fact that many accidental deaths and injuries are due to the mistaken belief that removing the magazine of the pistol (or other magazine-fed weapons) is all that is necessary to unload it. Nothing could be further from the truth. To unload a pistol or other magazine-fed weapon completely and render it safe to handle, it is necessary not only to remove or empty the magazine but also to make absolutely certain the chamber is empty. The only way this can be done is to pull back the slide or bolt and inspect the chamber either visually or, it if is dark by feel. This should be done after the magazine is removed and with the muzzle pointed upward. Of course, if the chamber is loaded, the round will be extracted and ejected when the slide is operated. "I didn't know it was loaded" is never an excuse for the accidental discharge of a weapon-especially for the Gunner's Mate. All weapons must be considered loaded when the slide or bolt is forward and/or the magazine is in the weapon. It is safe only when the slide or bolt is locked in the OPEN position, the magazine is out of the weapon, and the chamber is visibly empty.

When you are handling revolvers, a simple visual inspection is sufficient to determine if any chambers in the cylinder are loaded

Keep the hammer fully down when the pistol or revolver is not loaded. When the pistol is cocked, keep the safety lock in the ON (SAFE) position until ready to fire.

Let's review briefly some of the safety precautions that apply to the handling of all small arms:

- Never point a weapon at anyone or anything you are not ready to destroy.

- Unless the weapon is to be used immediately, never carry it with a round in the chamber.

- Unless you are about to fire it, the safety of every small-arms weapon must always be in the SAFE position. Always keep your finger away from the trigger. When the safety is moved from the SAFE to the FIRE position, many small arms will fire if the trigger is pressed as the safety is released

- Consider a gun loaded until you have opened the chamber and verified that it is empty. It is not enough to wail afterward, "I didn't know it was loaded." The empty weapon is the dangerous one.

- Before firing any weapon, be sure there are no obstructions in the bore.

. Before firing any weapon, be sure the ammunition you are using is the right ammunition. For example, the M14 ammunition cannot be used in the M16 rifle. Nor should you try to use illumination signals with shotguns, even though they look much like shotgun shells.

- Before firing, be sure there is no grease or oil on the ammunition or in the bore or chamber. Although lead bullets may be lightly waxed or greased, there must never be any lubricant on the cartridge case.

- Keep ammunition dry and cool. Keep it out of the direct rays of the sun. Keep ammunition clean, but do not polish it or use abrasives on it. Do not attempt to use dented cartridges, cartridges with loose bullets, or cartridges eaten away by corrosion. Be particularly careful with tracer ammunition, which can ignite spontaneously if damp.

- Misfires and hangfires can occur with small-arms ammunition as well as with other types. On some weapons, like the automatic pistol, you can recock and attempt to fire again without opening the breech. If, after a couple of attempts, this proves unsuccessful or if the weapon cannot be recocked without opening the bolt, wait at least 10 seconds, then open the bolt and eject the defective round. Defective small-arms ammunition should be disposed of according to current regulations.

A misfire with blank cartridges may leave unburned powder deposited in the bore; always check the bore after any misfire and clean it if necessary.

If you experience a light recoil or report, clear the weapon and check the bore for an obstruction. This may indicate a partial burning of the propellant that may not have been sufficient to force the bullet clear of the muzzle.

WARNING

Never try to dislodge a bullet from the barrel by firing another bullet.

SMALL-ARMS MAINTENANCE

LEARNING OBJECTIVE: Discuss the importance of proper maintenance on small arms.

The cleaning, preservation, and care given to small arms are determining factors in their operation and shooting accuracy. You have undoubtedly heard that an ounce of prevention is worth a pound of cure. This can aptly be applied to the maintenance of all ordnance weapons and equipment. To maintain these weapons properly, you must use a system of preventive maintenance. The preventive maintenance procedures for Navy small arms are set forth in the appropriate 3-M Systems MRCs.

Preventive maintenance is the systematic care, the inspection, and the servicing of material to maintain it in a serviceable condition, prevent breakdowns, and assure operational readiness. To maintain your small arms in a state of readiness, you must service (including lubrication) them each time they are used and periodically when in stowage.

Inspections of each weapon are an important part of preventive maintenance. Inspections to see if items are in good condition, correctly assembled, secure, not worn, and adequately lubricated, apply to most items in preventive maintenance procedures.

STOWAGE AND ISSUE OF SMALL ARMS

LEARNING OBJECTIVE Describe the requirements for the security, stowage, and issuing of small arms.

As a Gunner's Mate, you are responsible for the security, stowage, and issue of all small arms. The increasing number of reported instances of ammunition and weapon pilferage by dissident groups and individuals indicates the necessity for stricter control of stowage, security, custodial responsibility, and inventory reconciliation procedures for easily pilfered items, which include small arms.

Small arms should always be stowed in an authorized and secure stowage to prevent pilferage. You must maintain a strict accountability at all times. *Department of the Navy Physical Security Instruction for Conventional Arms, Ammunition, and Explosives (AA&E),* OPNAVINST 5530.13, contains detailed instructions for the security of small arms and other AA&E materials. This includes access control, key custody, and stowage requirements. Since this instruction is subject to frequent changes, we will not go into any detail on its contents. However, you are strongly encouraged to become familiar with the specifics of this document and to make its contents the object of frequent training and review in your work center.

Since all small arms are *considered equipage,* **a** signature of subcustody is required before they are issued from their normal place of stowage. Any type of signed custody record may be used as long as it bears the receiving individual's signature. Inside the armory, you should have a list of personnel who are qualified to be issued weapons. Anyone who is not on that list should not be able to draw a weapon from the armory. A second consideration for issuing small arms is to

determine whether or not the requesting person is authorized to draw a weapon at this time. Any out-of-the-ordinary requests for weapons should be prearranged and authorized. When in doubt, call your chief, the division officer, or the command duty officer. Again, the important security measures are to keep the weapon locked up and, when it is issued, to determine qualification and authority and to get a signature.

SMALL-ARMS RANGE DUTIES

LEARNING OBJECTIVE: Discuss small-arms range duties and responsibilities both ashore and afloat.

As a Gunner's Mate, you maybe assigned to duty at one of the Navy's small-arms ranges ashore. However, you will certainly be routinely called upon to conduct the small-arms qualification firing of shipboard security force and quarterdeck watch stander personnel. Both cases require that you be proficient in range operation and safety as well as marksmanship procedures. Normally, every ship has two crewmen, usually Gunners' Mates who have been to the Navy small-arms instructor school and are certified as range masters. Certified range masters carry an 0812 or 0176 NEC. NEC 0812 is permanent and qualifies the holder to run a small-arms range both aboard ship and ashore. NEC 0176 is valid for 3 years and qualifies the holder to run shipboard ranges only. Even if you are not one of these persons, you may be called upon to assist by acting as an additional safety observer on the firing line, giving a safety brief, providing marksmanship instruction, or keeping score records.

Marksmanship procedures for each weapon are contained in the TM or FM for that weapon.

HAND GRENADES

LEARNING OBJECTIVE Describe the type and purpose of the various hand grenades used by naval forces.

A hand grenade is a small bomb with the user's arm providing the motive power to get it to the target. Hand grenades may be filled with explosives, explosives and chemicals, or (for practice purposes) maybe empty or contain inert filler. Hand grenades come in many sizes, shapes, and types and are designed to fulfill a wide variety of purposes. They can be used for inflicting material and personnel casualties, screening, signaling, illuminating, demolition, harassing, and incendiary action.

TYPES AND CHARACTERISTICS

The general types of hand grenades issued are (1) training, (2) practice, (3) fragmentation, (4) offensive, and (5) chemical. Each type is designed to do a special job. For a summary of the characteristics and capabilities of each hand grenade, refer to the Army FM 23-30. Certain characteristics common to all hand grenades are as follows:

- The range of a hand grenade is relatively short. The range depends on the ability of the individual and the shape of the grenade. A well-trained sailor should be able to throw the fragmentation hand grenade an average of 44 yards but may average only 27 yards with the heavier white phosphorus smoke grenade.

- The effective casualty radius of a hand grenade is relatively small when compared to that of other weapons. The term *effective casualty radius* is defined as the radius of a circular area around the point of detonation within which at least 50 percent of the exposed personnel will become casualties. The effective casualty radius varies with the type of hand grenade used, so casualties can and do occur at distances greater than this radius.

- Delay fuzes are used in all standard hand grenades. Detonation of the grenade is not on impact but after the delay element in the fuze has burned, The fuze assembly (fig. 3-114) consists of a the body, a

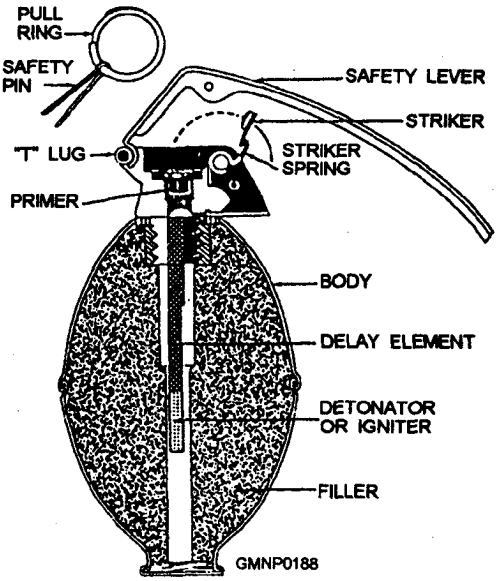

Figure 3-114.—Functioning of the fuze.

safety lever, a safety pin, a striker spring, a primer, a delay element, and a detonatcr or igniter. For further information about the operation of the fuze assembly, refer to FM 23-30. All casualty-producing grenades (fragmentation, offensive, and white phosphorus) have a 4- to 5-second delay. Because of this short delay, personnel must stay alert when arming and throwing hand grenades.

PROCEDURES FOR THROWING

For greater accuracy and range, you should throw the grenade like a baseball, using the throwing motion most natural to the individual. It is important to grip the grenade properly. Figure 3-115 shows the proper position of the grenade before pulling the safety pin. First, cradle the grenade in the fingers of the throwing hand. Hold the safety lever down firmly under the thumb between the tip and first finger joint. In this way, the grenade fits snugly into the curved palm of your hand, giving you a firm, comfortable grip but do not relax your thumb pressure on the safety lever until you throw the grenade.

The first steps in grenade throwing are to develop good throwing habits and several throwing positions. Four throwing positions are recommended: (1) standing, (2) kneeling, (3) prone, and (4) crouch.

The procedures for throwing from the standing position are as follows:

1. Stand half-facing the target with your weight balanced equally on both feet. Hold the grenade chest high, using-the correct grip (fig. 3-116, view 1).

Figure 3-115.—Proper way to grip the hand grenade.

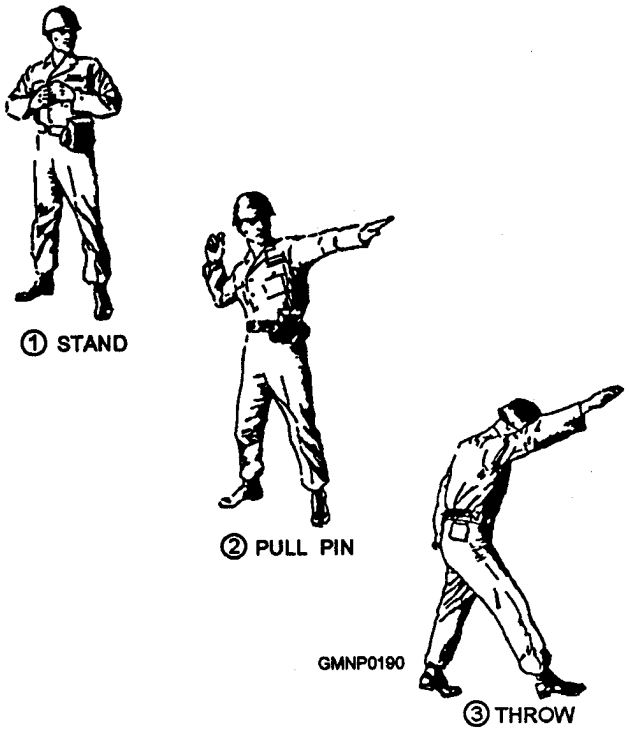

Figure 3-116.—To throw from the standing position.

2. Pull the pin with a twisting, pulling motion. Cock your throwing arm to the rear (view 2).

3. Throw the grenade with a free and natural motion. As it leaves your hand, follow through by stepping forward with your rear foot (view 3). Observe the point for probable strike, then duck your head to avoid fragments or other effects.

4. Recover, then resume the original standing position.

FM 23-30 explains the proper steps to be taken when using any of the other positions.

SAFETY

The following safety precautions should be observed when handling or using hand grenades:

1. Do not take any grenade apart unless ordered to do so by competent authority.

2. Do not tamper with grenades and do not recover or tamper with live grenades that fail to explode (duds). These duds are recovered and destroyed only by qualified personnel.

3. Do not pull the safety pin until you are ready to throw the grenade. If the safety pin will not pull out easily with a pulling-twisting motion, straighten its

ends. In the majority of cases, this will not be necessary. Maintain a firm grip on the safety lever when removing the safety pin.

4. After you pull the safety pin, throw the grenade. Do not attempt to replace the pinto return it to a safe condition.

5. When throwing a fragmentation grenade without protective cover, drop immediately to a prone position, face down, with your helmet toward the grenade. Keep your arms and legs flat against the ground. Other personnel in the area who are exposed must be warned to drop to a similar position. Steel helmets and body armor should be worn at all times when using grenades.

6. Although little danger is involved in using practice hand grenades, they require some degree of care in handling and throwing. You can throw the practice grenade a safe distance but, for the purpose of training and to prevent injury from an improperly loaded grenade, take cover. Wear the steel helmet, and keep all other personnel at a safe distance. Practice grenades that fail to function (duds) are not recovered for at least 10 minutes and then only by trained personnel.

7. Grenades are issued in the "with fuze" and "without tie" condition. They are not necessarily shipped in separate containers. The detonator of a fuze is very sensitive to heat, shock, or fiction. Army FM 23-30 explains the safety precautions and steps taken when fuzing hand grenades.

LANDING-PARTY EQUIPMENT

LEARNING OBJECTIVE. Identify the various components of landing-party equipment and discuss its proper assembly.

Landing-party or load-carrying equipment consists of the items shown in figure 3-117. Each item has been designed to make the job of carrying the equipment you will need easier and more comfortable. If you are a member of a boarding party, you may substitute other

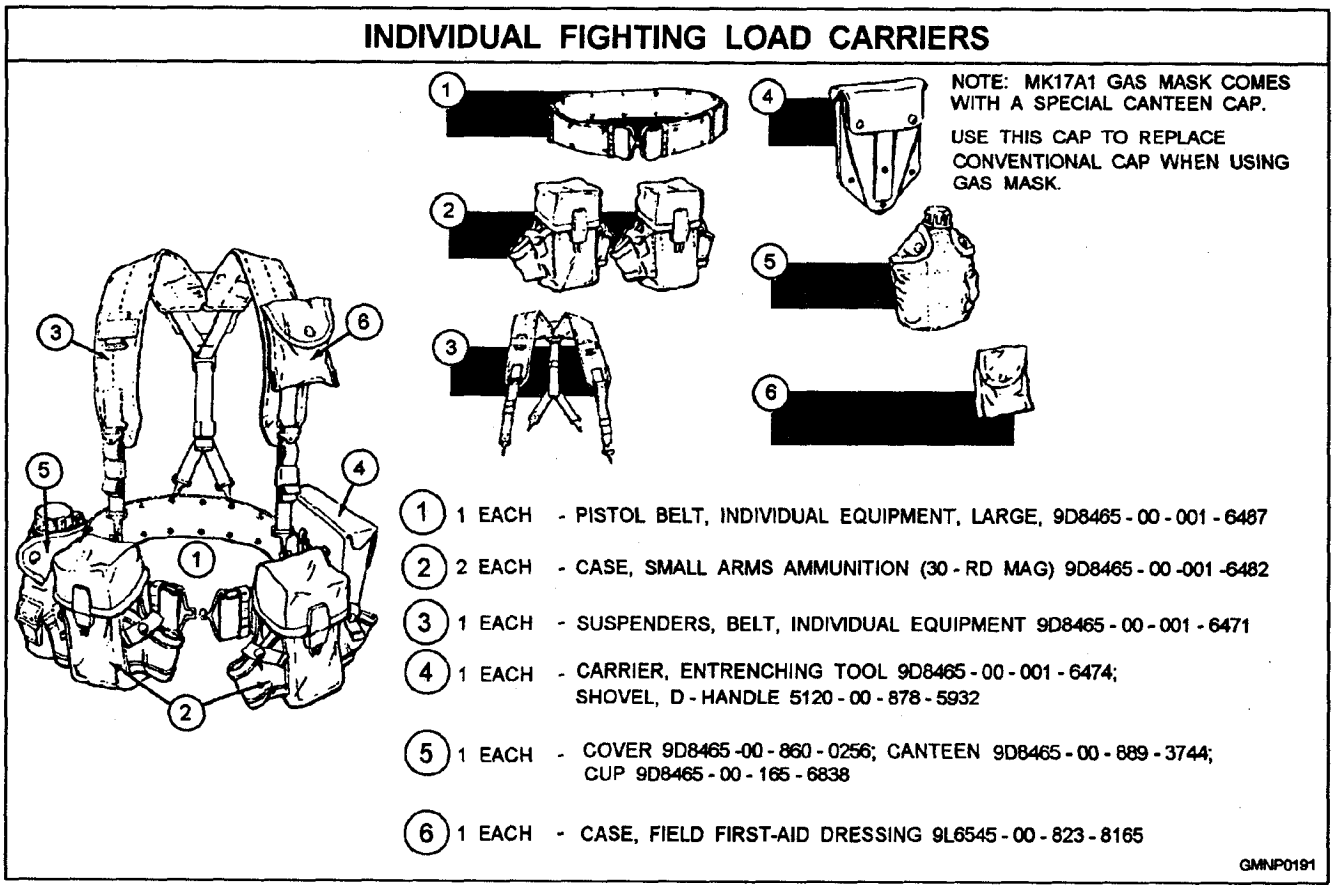

Figure 3-117.—Load-carrying equipment.

needed items that are essential to your mission. For example, you might want to replace the entrenching tool with another canteen when boarding foreign vessels.

The suspenders is one of the most overlooked necessities. The suspenders move the weight of the load from the waist to the shoulders where it should be. 'They also have hooks to hang additional equipment. Figure 3-118 shows an example of the equipment assembled. Remember, carry only the equipment needed to complete your mission and keep your load as light as possible. The assembled unit is usually worn over an armored vest.

SUMMARY

In this chapter we discussed the small arms currently in use by the Navy, their operation, functioning, and maintenance. We described some of the responsibilities of a Gunner's Mate relative to these small arms, including range operations, security procedures, and general small-arms safety. We described hand grenades, how they are used, and some safety precautions pertaining to them. Finally, we described some load-carrying equipment commonly used by boarding parties.

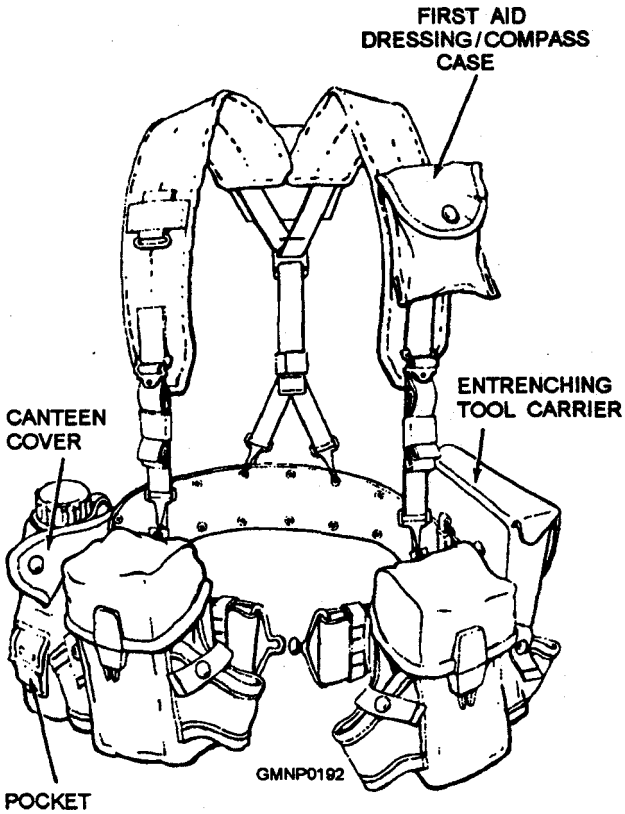

Figure 3-118.—Assembled load-carrying equipment.

CHAPTER 4

BASIC MECHANISMS

The purpose of this chapter is to explain some of the fundamentals of mechaniccs and hydraulics to help you better understand the ordnance equipment that you will be working within the fleet. We will also introduce you to the air and power supplies that are used by a shipboard GMLS and gun system. The control mechanisms of GMLS and gun systems involve a combination of mechanical, hydraulic, electrical, and electronic devices. By studying this chapter and the chapter that follows (on electricity and electronics), you should become familiar with most of the principles of how these devices operate. Understanding how these devices operate is the first step in becoming a good technician. Pay particular attention to the references listed throughout the text, which describe sources of more detailed information on each topic. These textbooks are included on the bibliography list for GM3 through GMC (from which advancement examination questions are referenced).

MECHANICAL DEVICES

LEARNING OBJECTIVE: Discuss the operating principles of the mechanical devices used in ordnance equipment.

The movement and functioning of major systems (directors, launchers, and gun mounts) are accomplished, in part, using one or more basic mechanical devices. Our discussion centers on the functioning principles and applications of cams, gear trains, levers and linkages, couplings, and bearings.

CAMS

A cam is an irregularly shaped device used to transmit motion through a follower. The cam surface contours are determined by the needs of the device the cam serves. The follower may be used to operate any number of other mechanisms.

In figure 4-1, we show a face cam being used in a cutout device for a gun firing circuit. The cam face is contoured to correspond to the ship's firing and nonfiring zones. Each position on the cam plate corresponds to a specific position of gun train and elevation. The low area corresponds to the positions in which the gun may be safely fired; the raised area corresponds to the areas where firing would endanger permanent ship's structure. The cam is geared to the train drive to rotate as the gun moves in train. The follower is linked to move across the face of the cam as the gun is moved in elevation. The follower is linked to a switch in the firing circuit that opens when the follower is raised by the high portions of the cam.

The face cam is one of many different styles. There are also barrel cams and edge cams. The barrel cam is similar to the face cam but is cylindrical in shape with the cam surface on the inside or outside. Both face and barrel cams are used in firing cutout mechanisms.

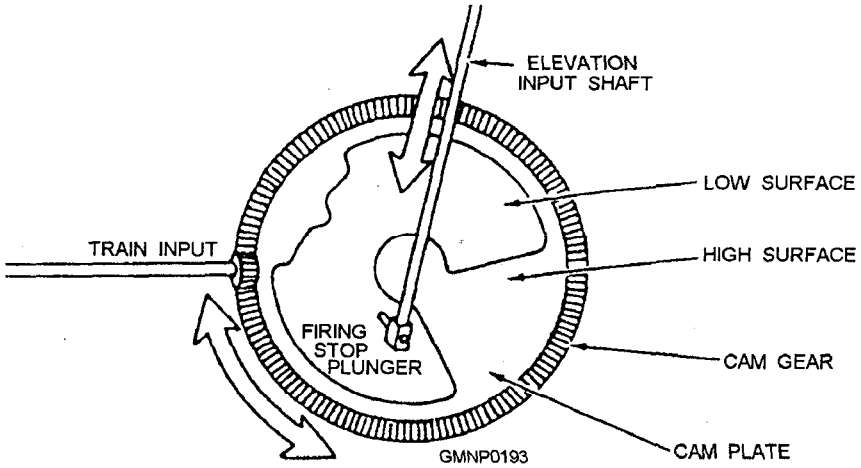

Figure 4-1.—A face cam used in a firing cutout mechanism.

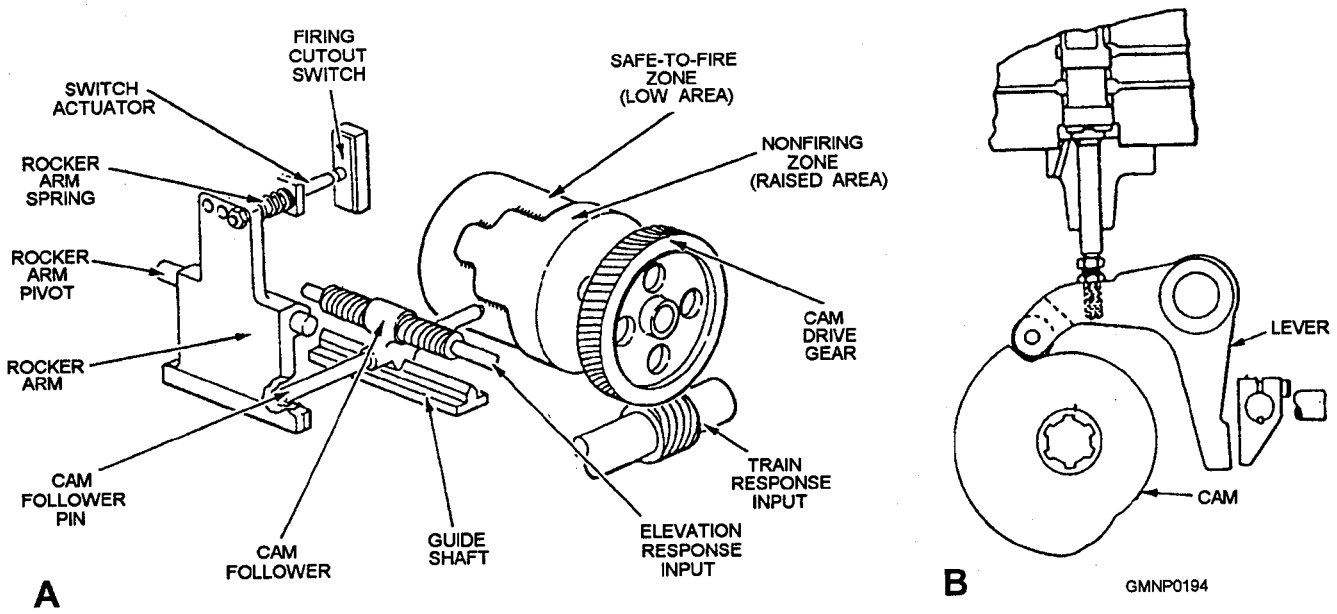

Figure 4-2.—A. A barrel cam used as a firing cutout device in a 5"/54 gun; B. An edge cam positioning a hydraulic valve.

An edge cam is one that has the irregular surface machined around its outer edge. It may be stationary with the follower attached to a nearby moving component, or rotary. Edge cams are used to shift valves, to make or break switch contacts, and to position other mechanical devices. Figure 4-2 shows some of the uses of cams in ordnance equipment.

GEAR TRAINS

Gears are used in almost all types of ordnance equipment. They are used to change direction of motion, to increase or decrease the speed of applied motion, and to magnify or reduce applied force. Gears also give you positive drive. There can be, and usually is, some slippage in a belt drive. Gear teeth, however, are always in mesh so there can be no slippage. This is true as long as the teeth are in good shape and not worn.

Gears in ordnance equipment are normally not seen. They are usually encased in a gearbox, filled with a gear lubricant. You can be sure gears and gear trains are at the heart of almost every type of machine.

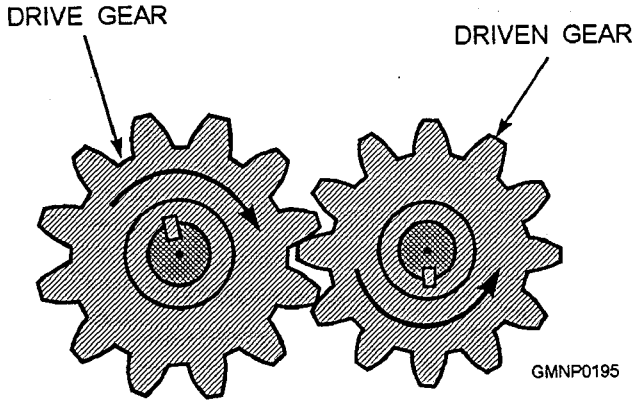

Figure 4-3.—Gears used to reverse the direction of rotation.

Changing Direction of Motion

Figure 4-3 represents the fundamental concept of reversing direction of rotation with gears. We have two gears in this simple gear train: the drive gear and the driven gear. The drive gear is rotating in a clockwise direction. This turns the driven gear in a counterclockwise direction, reversing the direction of rotation.

This quality is inherent in all gear trains; one gear turning another will always reverse the direction of motion. This is not always the desired result. To overcome this, you can insert an idler gear between the drive gear and the driven gear, as shown in figure 4-4. The idler reverses the direction of motion coming from the drive gear. This allows the driven gear to be turned in the same direction as the drive gear.

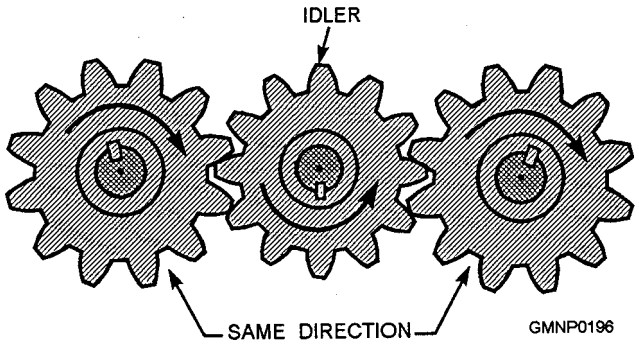

Figure 4-4.—The function of an idler gear.

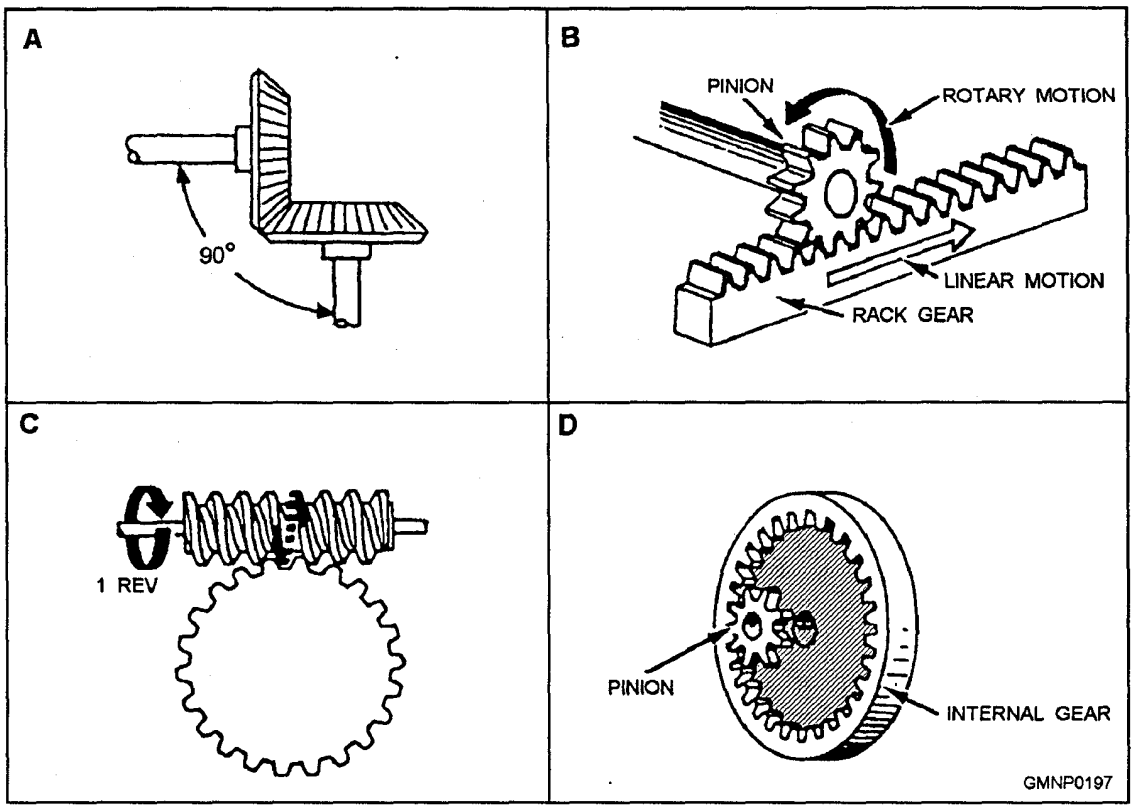

Figure 4-5.—Gear configurations.

Another form of direction change performed by gear trains is a change in angular direction. Figure 4-5 shows some of the different gear configurations used to change angular direction of motion. The first, and most common, is the bevel gear (fig. 4-5, view A). Bevel gears can be used to turn just about any angle. There are several different forms of bevel gears. The difference is in how the teeth are cut. The rack-and-pinion gear (view B) is used in cases where linear motion is desired.

Worm gears (view C) area special type of gear train. They have a unique property that makes them very useful for train and elevation drive trains and ammunition hoists. A worm gear can transmit motion in only one direction through the worm. In application, this means that should you lose power halfway through a hoist cycle, the hoist and ammunition will not "free-fall" back to the bottom of the hoist.

View D shows a pinion and an internal gear. Either can serve as the drive gear. This configuration is used in most missile launcher and gun mount train drives. The internal gear is mounted stationary in the stand, while the pinion is part of the mount or launcher. The train drive motor transmits motion through a worm gear to the pinion, which walks around the inside of the internal gear, moving the mount or launcher with it.

Changing Speed

Most hydraulic equipment is driven by a 440-volt ac constant speed electric motor. These motors have to spin at very high speeds to be efficient. To be usable for driving a hydraulic pump or anything else, you must reduce the output speed of the motor. This is accomplished through reduction gears. The reduction gears are located in an oil-filled encasement, which normally appears to be part of the drive motor housing.

Figure 4-6 will help you understand how this is possible. Wheel A has 10 teeth that mesh with the 40

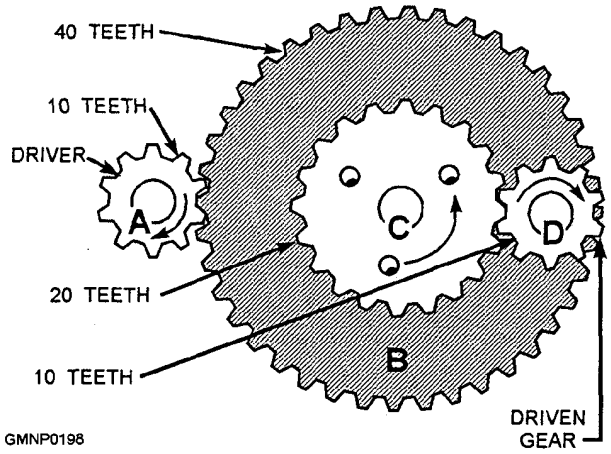

Figure 4-6.—Simple reduction gears.

teeth on wheel B. Wheel A will have to rotate four times to cause wheel B to make one rotation. Wheel C is fixed rigidly to the same shaft as wheel B. Therefore, wheel C makes the same number of revolutions as wheel B. However, wheel C has 20 teeth and meshes with wheel D that has 10 teeth. This causes wheel D to rotate twice for every one revolution of wheel C. If you rotate wheeI A at a speed of four revolutions per second, wheel B will rotate one revolution per second. Wheel C also moves one revolution per second, turning wheel D at a speed of two revolutions per second. You get an output speed of two revolutions per second from an input of four revolutions per second with a speed reduction of one half.

Almost any increase or decrease in speed can be obtained by choosing the correct gears for the job.

Magnifying Force

Gear trains can be used to increase mechanical advantage. The rule is: whenever you reduce speed with a gear train, you increase the effect of the force applied. The theory of this principle will not be discussed here. For further information on gears and gear trains, as well as the theories of how they work, see the Navy training manual *Basic Machines*, NAVEDTRA 12199.

LEVERS AND LINKAGES

One of the simplest and most familiar types of machines is the lever. Levers are used to overcome big resistances with relatively small effort. The principle of leverage is used extensive y throughout ordnance equipment.

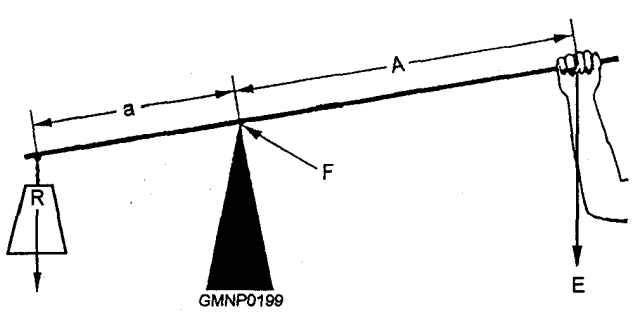

Figure 4-7.—A simple lever.

The three basic components that comprise all levers are the fulcrum (F), a force or effort (E), and a resistance (R). Look at the lever in figure 4-7. You seethe pivot point (F, fulcrum), the effort (E) that you apply at a distance (A) from the fulcrum, and a resistance (R) that acts at a distance (a) from the fulcrum. Distances (A) and (a) are the lever arms.

The application of leverage in ordnance equipment uses mechanical linkages to transmit and increase force. Figure 4-8 shows the mechanical linkages in a 5"'/54Mk 42 Mod 10 carrier ejector assembly. The linkages act together to eject a complete round of ammunition from the transfer station to the carrier tube. The carrier tube must be completely open before the round is ejected into it. Therefore, a time delay slot is incorporated to allow the linkages to move, opening the carrier before the transfer station ejectors actuate. For further information on the fundamentals of levers and linkages, see the Navy training manual *Basic Machines*, NAVEDTRA 12199.

COUPLINGS

In a broad sense, the term *coupling* applies to any device that holds two parts together. For our purposes, these two parts will normally be rotating shafts. In its most familiar application, a coupling will permit one shaft to transmit motion to another shaft that is, or may be, misaligned. The misalignment may be intentional, as in the case of an automobile drive shaft. The drive shaft links the output shaft of the transmission in the front of the automobile to the input shaft of the rear drive unit. The engine and transmission are fixed to the chassis, while the rear drive unit is spring-mounted to the chassis to ride over bumps in the road. The couplings (in this case, universal joints) allow for the efficient transmission of motion while at the same time providing flexibility in the drive train. The misalignment may also be unintentional or unavoidable

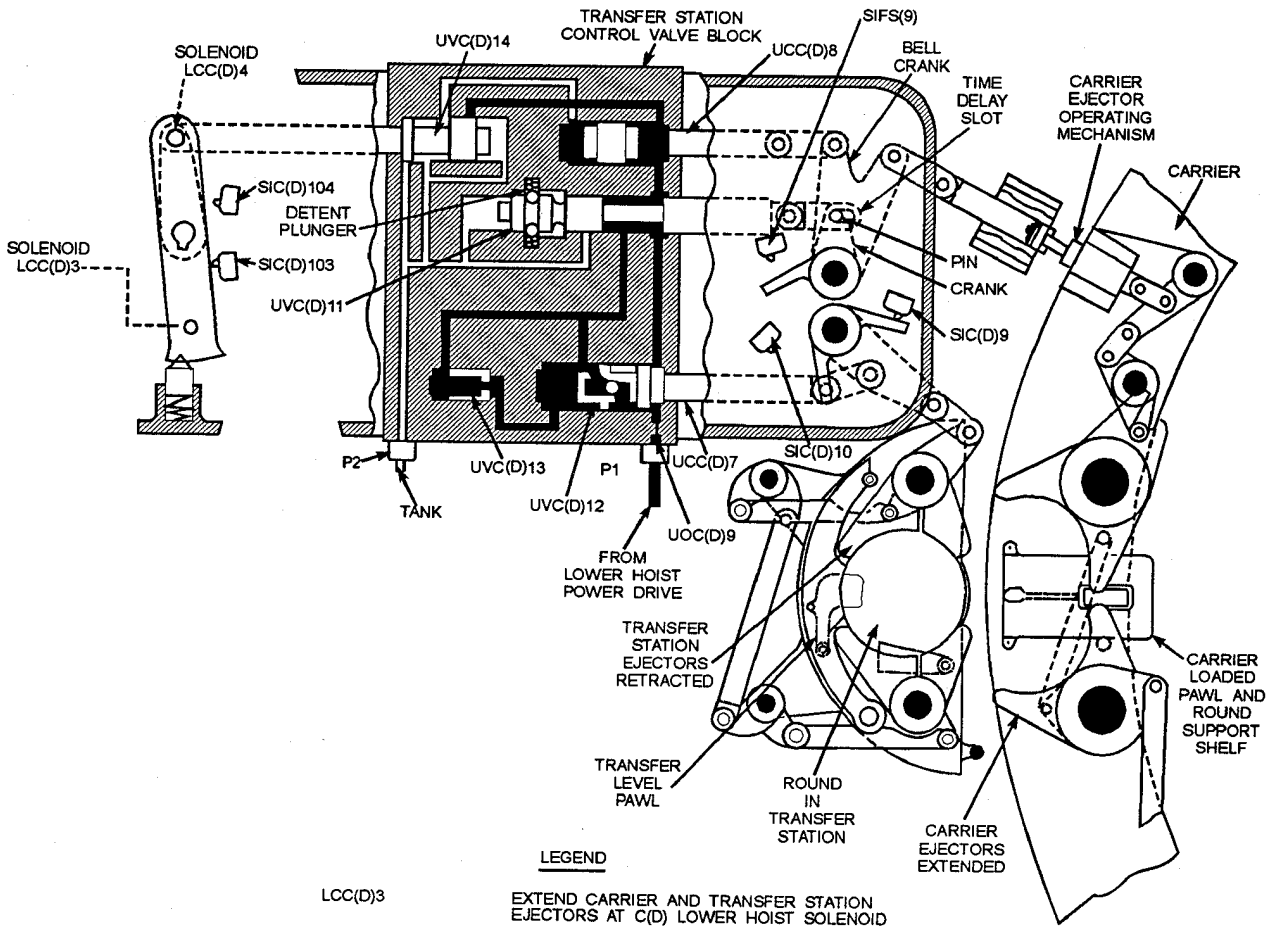

LEGEND

LCC(D)3	EXTEND CARRIER AND TRANSFER STATION EJECTORS AT C(D) LOWER HOIST SOLENOID
LCC(D)4	RETRACT CARRIER AND TRANSFER STATION EJECTORS AT C(D) LOWER HOIST SOLENOID
SIC(D)9	C(D) LOWER HOIST TRANSFER STATION EJECTORS RETRACTED SWITCH
SIC(D)10	C(D) LOWER HOIST TRANSFER STATION EJECTORS EXTENDED SWITCH
SIC(D)103	C(D) HOIST TRANSFER STATION EJECTORS EXTEND SOLENOID ENERGIZED SWITCH
SIC(D)104	C(D) HOIST TRANSFER STATION EJECTORS RETRACT SOLENOID ENERGIZED SWITCH
SIF8(9)	CARRIER EJECTORS AT C(D) LOWER HOIST RETRACTED SWITCH TRANSFER STATION EJECTOR OPERATING PISTON
UCC(D)7	TRANSFER STATION EJECTOR OPERATING PISTON
UCC(D)8	CARRIER TUBE EJECTOR OPERATING PISTON
UOC(D)9	ORIFICE
UVC(D)11	CARRIER EJECTOR CONTROL VALVE
UVC(D)12	CHECK VALVE
UVC(D)13	METERING VALVE
UVC(D)14	EJECTOR CONTROL VALVE

- SERVO PRESSURE
- TANK

Figure 4-8.—The 5"/54 carrier ejector mechanism.

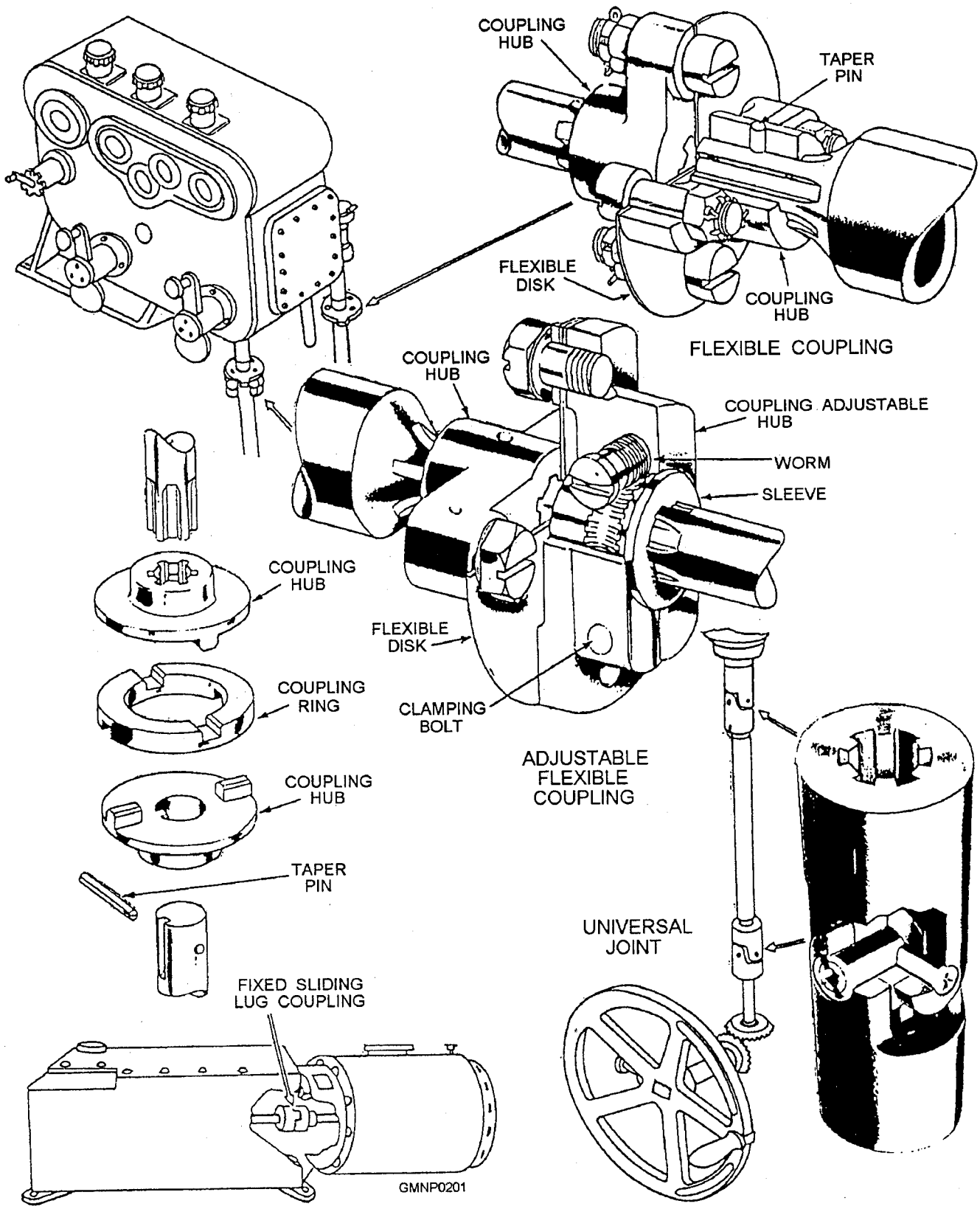

Figure 4-9.—Couplings and their applications.

because of wear or slippage. Figure 4-9 shows four types of couplings commonly used in ordnance equipment.

The adjustable flexible coupling (also called vernier coupling) joins two shafts by means of a flexible metal disk with an adjustable element. By loosening the clamping bolt and turning the worm, you can turn the right-hand shaft. This type of coupling can be found on nearly all types of guns in applications that require finely adjusted mechanical outputs. A flexible coupling is similar to this but does not contain the adjustment feature.

The fixed sliding lug (Oldham) coupling is not as rigid as its name implies. While it is not designed to connect shafts that meet at an angle, it will transmit motion and allow for some misalignment between shafts that are parallel but fail to meet each other exactly. Figure 4-9 shows the output shaft of a drive motor linked by a fixed sliding lug to the input shaft of a hydraulic pump located inside a fluid reservoir. This is necessary for two reasons. First, if the shaft were common to the two devices, when one device required replacement, both would have to be replaced. Second, any wear or misalignment in one device would cause bearing or seal wear in the other device.

The universal joint is used in ordnance equipment, as we said earlier, where the shafts intentionally meet at an angle. Universal joints also have the advantage of great strength, making them useful in heavy load applications. Other connecting devices and adjustments are discussed in chapter 12 under mechanical adjustments.

BEARINGS

We must start our discussion of bearings with a brief word on friction. Friction is the resistance to relative motion between two bodies in contact. Sometimes this resistance is useful. For example, it is hard to walk on ice because there is very little friction between your shoes and the ice. In ordnance, however, friction is mostly unwanted. It takes effort to rotate trains of gears, to move levers and shafts, and so forth. Friction in these mechanisms adds to the effort required. Lubrication is one answer; this is discussed later in chapter 12. It coats the surfaces of moving parts in contact with one another and separates them by a fluid film. In some cases, though, this is not enough. Sometimes the speed of the moving parts or the load on them is so great that the oil film will be thrown out or ruptured. In this case, bearings (and lubrication) are the answer.

Plain (Sliding) Bearings

Most often the parts that rub together are made of steel. Sometimes the friction can be reduced sufficiently by simply inserting a strip of softer metal, such as bronze, between the two steel parts. This is the theory behind the plain, or sliding, type of bearing. In figure 4-10, you can see two applications.

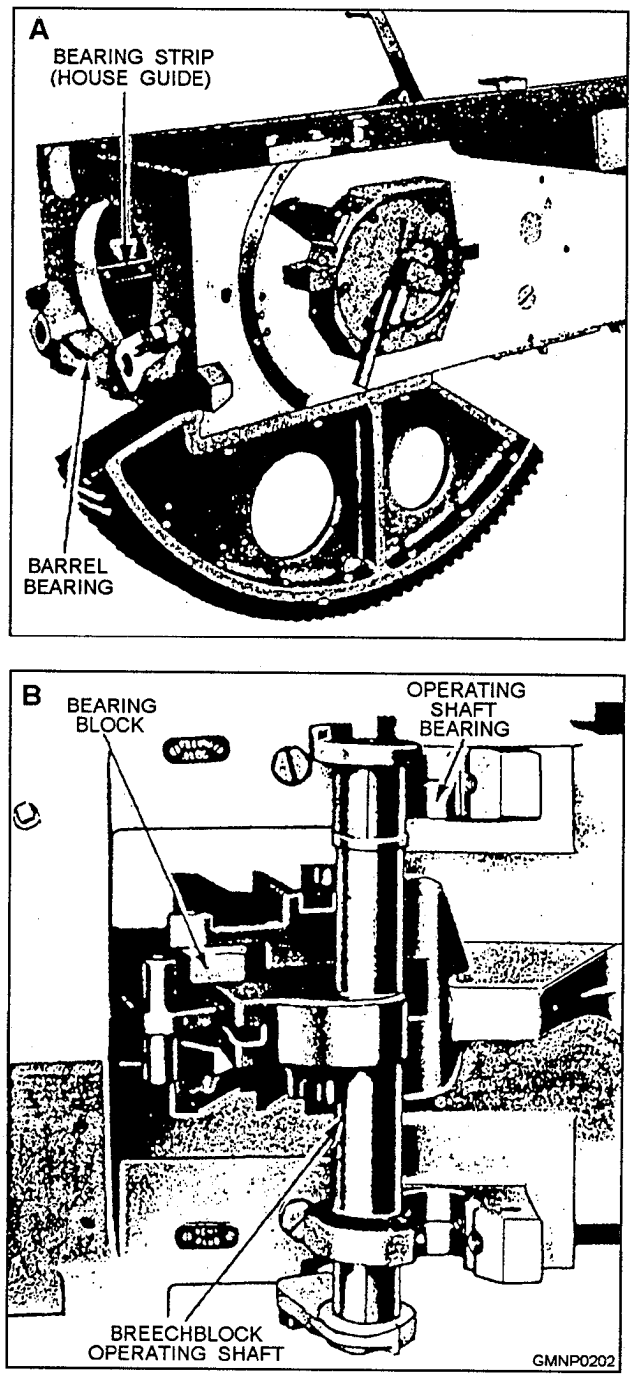

Figure 4-10.—Example of plain (sliding) bearings.

In figure 4-10, view A, you see a gun slide weldment in which the gun and housing move in recoil and counterrecoil. The bearing strips (one is hidden) inside the slide are made of bronze and support the heavy housing as it moves forward and aft during firing. The barrel bearing, also bronze, supports the barrel in these movements. In view B, you are looking up at a sliding wedge type of breech mechanism. The breech operating shaft, in its rotating movement, raises and lowers the breechblock. Here, the steel operating shaft is kept from coming into direct contact with the steel gun housing and bearing caps (not shown) by the operating shaft bronze journal bearings. For ease in assembly and disassemble y, the bearings are in two parts. Notice the oil grooves cut into the inside of the bearing. These grooves distribute the lubricant around the shaft from a zerk fitting on the bearing caps.

The bronze bearing blocks, up inside the breechblock, transmit the rotating movement of the operating shaft to a vertical movement to raise and lower the breech. These are oblong bearings, riding in slanted blockways in the block. They are lubricated by means of oil holes drilled throughout their length.

Bearings with Roller Contact

The plain bearings we have just described will reduce friction. A much more efficient type, however, is that which inserts a rolling contact between the stationary and moving elements of the mechanism. The rolling elements are balls or rollers. The bearing assembly usually is made up of three parts: the rolling elements, a separator, and two races.

An ordnance application of roller bearings can be seen in figure 4-11, view A. Here, they are used to reduce friction between the rotating gun mount (base ring) and the stationary stand. The horizontal rollers support the weight of the mount. The upper race (roller path) is part of the base ring. The lower race is part of the stand. The separator keeps the roller bearings from getting canted and running into one another. The upright (radial) bearings reduce friction between the base ring and stand when a sideways force is exerted on the mount.

In view B, you see tapered roller bearings used in trunnions. In this application, they allow the trunnions to rotate freely but restrict sideways and up-and-down movement as the gun bucks during firing.

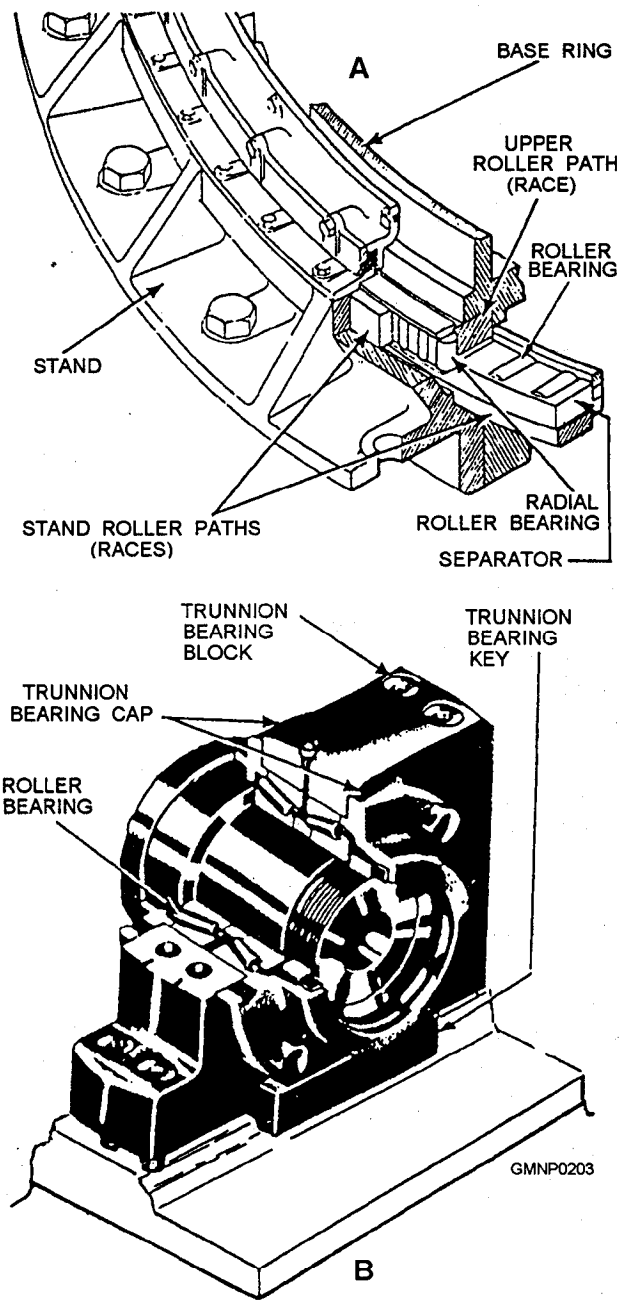

Figure 4-11.—Bearings with roller contact.

Ball Bearings

The roller bearing assemblies just described can be disassembled for replacement of parts, for cleaning, and for examination. Ball bearings, on the other hand, usually are assembled by the manufacturer and installed as a unit. Like roller bearings, the ball bearings reduce friction and, in some applications, prevent unwanted movement.

Sometimes maintenance publications refer to roller-and-ball bearings as being either radial or thrust

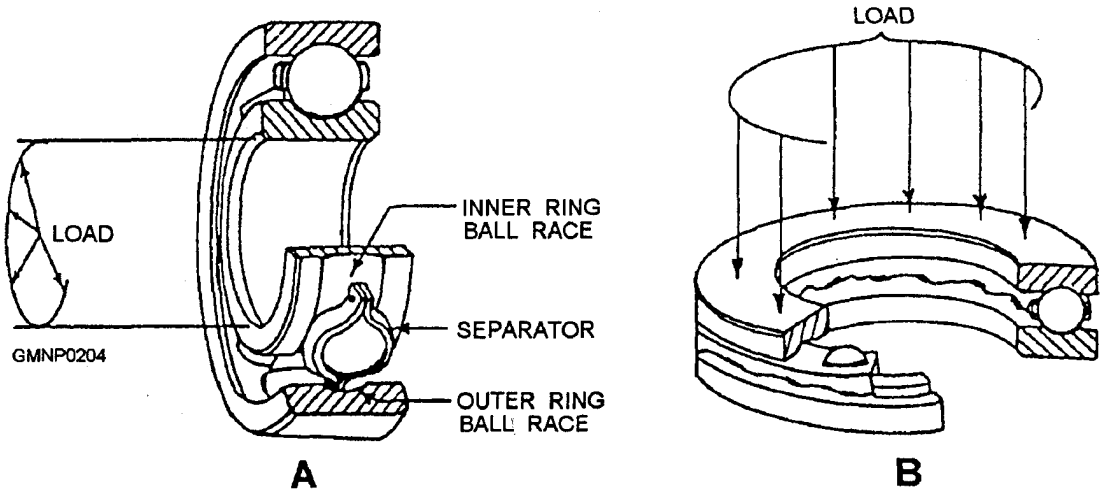

Figure 4-12.—Ball bearings: A. Radial type; B. Thrust type.

bearings. The difference between the two depends upon the angle of intersection between the direction of the load and the axis of rotation of the bearing. Figure 4-12, view A, shows a radial ball bearing assembly. The load here is pressing outward along the radius of the shaft. Now suppose a strong thrust is exerted on the right end of the shaft, tending to move it to the left. The radial bearing is not designed to support this axial thrust. Even putting a shoulder between the load and the inner race would not do. It would just pop the bearings out of their races. The answer is to arrange the races differently, as shown in view B. Here is a thrust bearing. With a shoulder under the lower race and another between the load and the upper race, it will handle any axial load up to its design limit.

The horizontal bearings shown in figure 4-11, view A, are another example of a roller thrust bearing assembly. The vertical roller bearings in the illustration are called radial bearings. Sometimes bearings are designed to support both thrust and radial loads, thus the term *radial thrust* bearings. For an example of such bearings, see the tapered roller bearings in figure 4-11, view B.

HYDRAULIC MACHINES

LEARNING OBJECTIVE: Discuss the principles of hydraulics and the application of hydraulics in ordnance equipment.

Hydraulic machines are used throughout ordnance equipment. They provide smooth and accurate train and elevation movement for gun mounts and missile launchers and operate the loading systems. To appreciate the usefulness of hydraulics, we need to understand some basic characteristics and definitions. In the practical sense, hydraulics is concerned with the uses of a fluid-filled system in transmitting applied forces and producing (or controlling) mechanical motion.

FLUID CHARACTERISTICS

Let's deal first with the transmission of applied force. There are two qualities of fluid that make them useful as a means to transmit force. They are (1) they take the shape of their containers and (2) they are not compressible. Therefore, pressure applied to a fluid in a closed container will be felt equally against the entire inside surface of the container. The force is transmitted equally in all directions, as shown in figure 4-13. This is true regardless of the shape of the container. This means that it is not necessary for the tube connecting the two pistons to be as large as the pistons throughout.

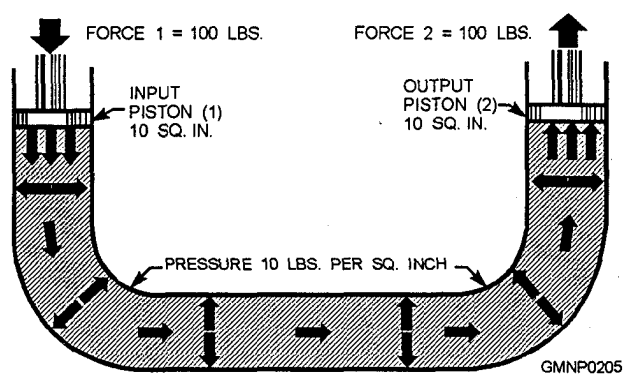

Figure 4-13——Force transmitted through fluid.

A connection of any size, shape, or length will do, as shown in figure 4-14. The size of the line, however, will determine the volume of fluid flow, which, in turn, affects operating speed.

In figures 4-13 and 4-14, the systems contain pistons with the same area. This makes the output force equal to the input force. Remember what we said earlier—the force applied is transmitted to all surfaces in the container equally. Now consider figure 4-15. The input piston is much smaller than the output piston. Assume the area of the input piston is 2 square inches. With a force of 20 pounds applied to it, a pressure of 10 pounds per square inch (psi) will be felt throughout the container, including the output piston. The upward force on the output piston is therefore 10 pounds for each of its 20 square inches, or 200 pounds. We have effectively multiplied the applied force.

The system works the same in reverse. Consider piston (2) the input piston and piston (1) the output. The output force will be one tenth of the input force.

You should now have a basic understanding of hydraulic principles. More information on hydraulic principles and theory can be found in the Navy training manual *Fluid Power,* NAVEDTRA 12964. This manual has a wealth of information that will be very useful to you as a Gunner's Mate.

SYSTEM COMPONENTS

Let's discuss some of the hydraulic components that are used in ordnance equipment. We will cover common system components: reservoirs, filtering devices, pressure regulators, pressure accumulators, and pumps and hydraulic power drives.

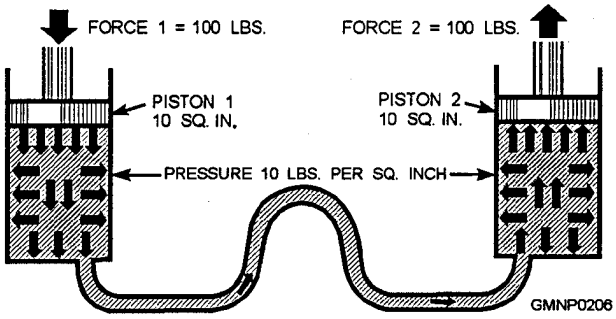

Figure 4-14.—Transmitting force through a small pipe.

Every hydraulic system has the same basic requirements. It must have a tank to store an adequate supply of fluid, a pump, and a device for removing impurities from the fluid. Most systems also have a mechanism for regulating the system output pressure and a flask for storing fluid under pressure.

Reservoirs

The reservoir (fig. 4-16) is a basic component of any hydraulic system. Inmost systems, the reservoir is a separate component. It may also be used as a housing with the hydraulic pump inside submerged in fluid. Although its primary function is to provide storage space for the fluid of the system, it may also perform several other functions. Reservoirs may be used to dissipate heat, to separate air from the system, and to remove contamination.

Reservoirs dissipate heat by radiation from the external walls. Some are constructed with external radiating devices, such as cooling coils or fins. The separation of air from the system is accomplished by the design of the reservoir. Baffles are used to slow the fluid as it returns to the reservoir. Air bubbles have a greater chance of escaping to the surface when the fluid is moving at a slow velocity. The tank is fitted with a device that allows the air bubbles to escape while not permitting contamination to enter. The separation of contamination from the fluid requires some form of filter, or strainer.

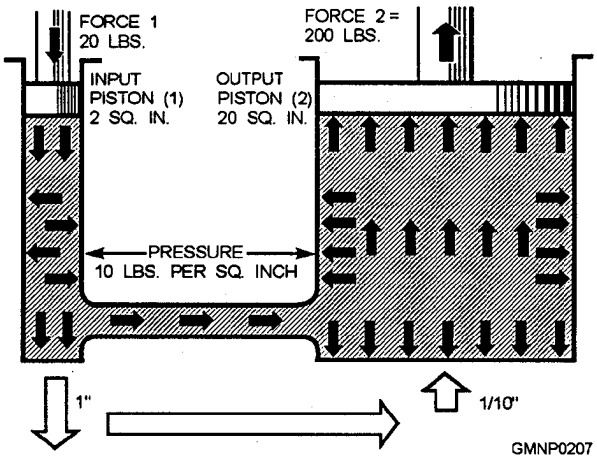

Figure 4-15.—Multiplication of forces.

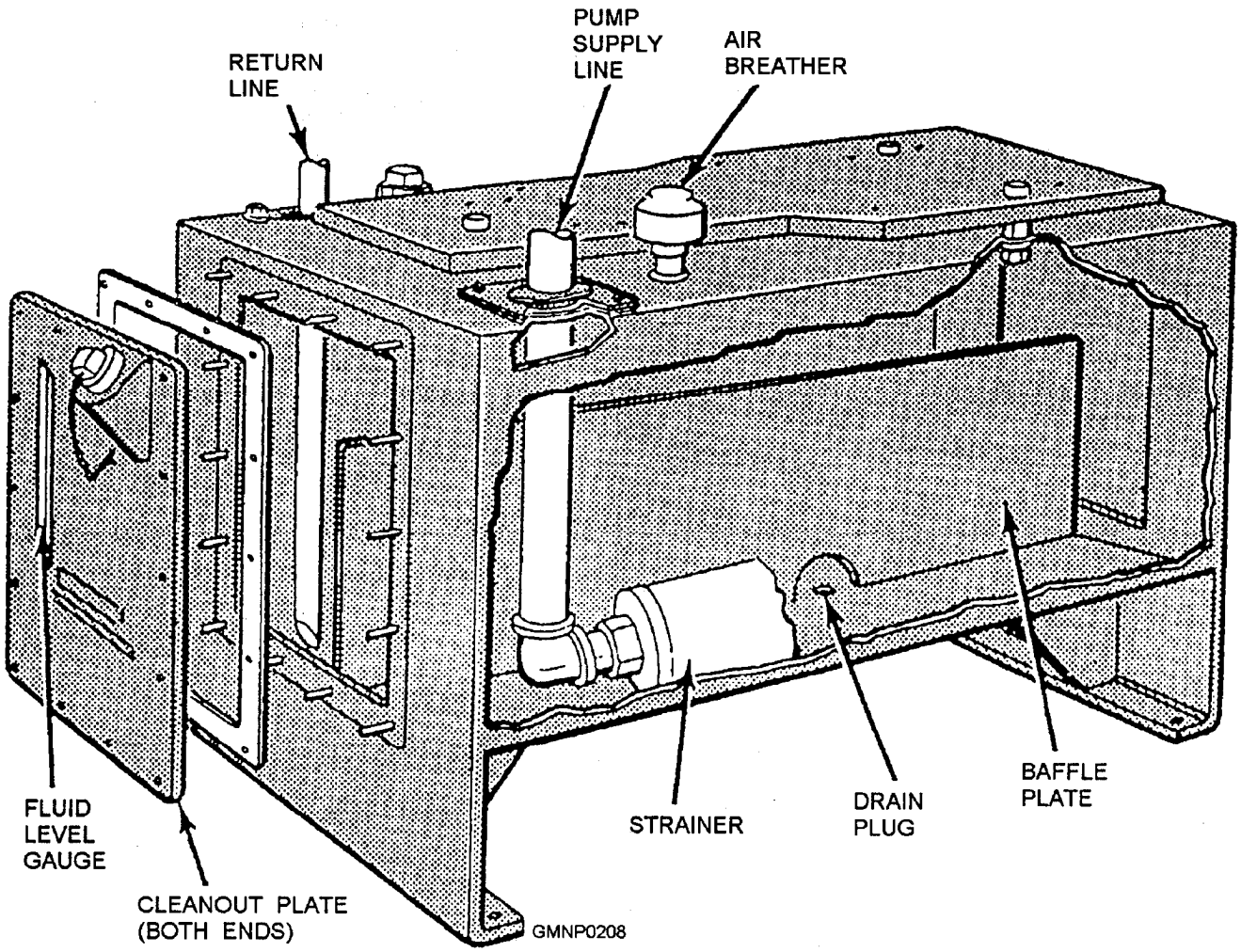

Figure 4-16.—A fluid reservoir.

Filtering Devices

Most malfunctions in a hydraulic system can be traced to some type of contamination in the fluid. Foreign matter in the system can cause excessive wear, increased power loss, and clogged valves, which increase maintenance costs. For this reason, every effort must be made to prevent contaminants from entering the system. Contaminants that do make their way into the system must be removed before they can cause damage. Filtration devices perform this function.

The filtering devices used in hydraulic systems are most commonly referred to as strainers and filters. Since they share a common function, the terms *strainer* and *filter* are often used interchangeably. As a general rule, devices used to remove large particles are called strainers, and those used to remove small particles are called filters.

A strainer will most often be found on the end of the pipe used to supply fluid to a pump from the reservoir. There it can remove any large particles that could clog or damage the pump. Filters can be placed anywhere in the system but are usually located between the pump and the pressure control device. Pumps do not normally have small orifices, which could easily clog. Pressure control devices, however, use very small passages and pistons that must be kept clear for proper operation.

Filters are classified as either full-flow or proportional-flow. In the full-flow type of filter, all the fluid passes through the filtering element. In the proportional-flow type, only a portion of the fluid is passed through the filter. Because of the complex

nature of ordnance equipment, most systems use the full-flow type of filter. Figure 4-17 shows a full-flow filter device (view A) and a common micronic filter element (view B). This type of element is designed to prevent the passage of 99 percent of solids greater than 10 microns in size. The element is usually made of disposable paper and is required to be replaced at regular intervals. Notice that the full-flow filter device is equipped with a bypass valve. Should the filter become clogged, the bypass valve opens, allowing unfiltered fluid to enter the system. This triggers an indication to the system operator that the filter is clogged. The system should be secured and the filter replaced immediately. The system does not secure itself under these conditions since the falters could clog in the heat of battle.

Pressure Regulators

The control and unloading valves shown in figure 4-18 are used to regulate the operating pressure in an accumulator power drive system. The operating range of the fluid pressure for the functional description that follows is assumed to be 950 psi to 1,050 psi.

The control valve and its piston maintain the operating range of the fluid pressure of the system by controlling the position of the unloading valve. The unloading valve (also called a bypass valve) is a three-way, plunger type of directional valve. Its function is to port the pump output to the accumulator during a charge cycle or to the tank (back to the reservoir) during an unloading cycle.

During an accumulator charging cycle (fig. 4-18, part A), the spring holds the control valve in the DOWN position. A drilled hole through the lower land of the control valve ports system pressure (PA) from the accumulator to the chamber between the control valve and its piston. The' piston has PA applied to both ends and, therefore, does not affect operation of the control valve during this portion of the cycle. However, PA is only applied to the lower end of the control valve. The position of the control valve is determined by the amount of pressure in the accumulator system. As the pressure increases, the valve moves upward against spring pressure.

During the charging cycle, PA is also ported from the upper chamber of the control valve to the spring-loaded (large area) side of the unloading valve. Pump output is also applied to the lower area around the seat (small area) of the unloading valve. The combination of spring pressure and PA on the large area keeps the unloading valve on its seat. In this position, fluid discharged by the pump is ported to the accumulator.

As fluid pressure in the accumulator increases, it forces the control valve upward against its spring pressure. When the pressure reaches 1,050 psi, the lower land of the control valve blocks PA and the upper land uncovers the tank line (part B). This vents the

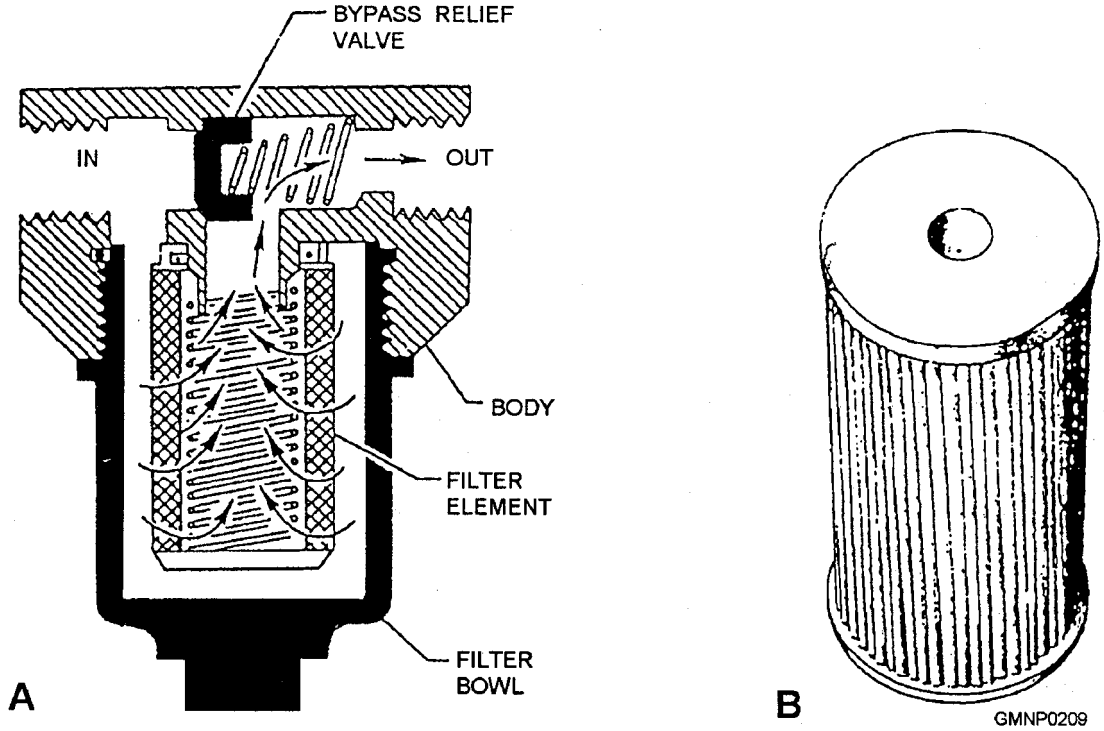

Figure 4-17.—A. A full-flow filtering device; B. A micronic filter element.

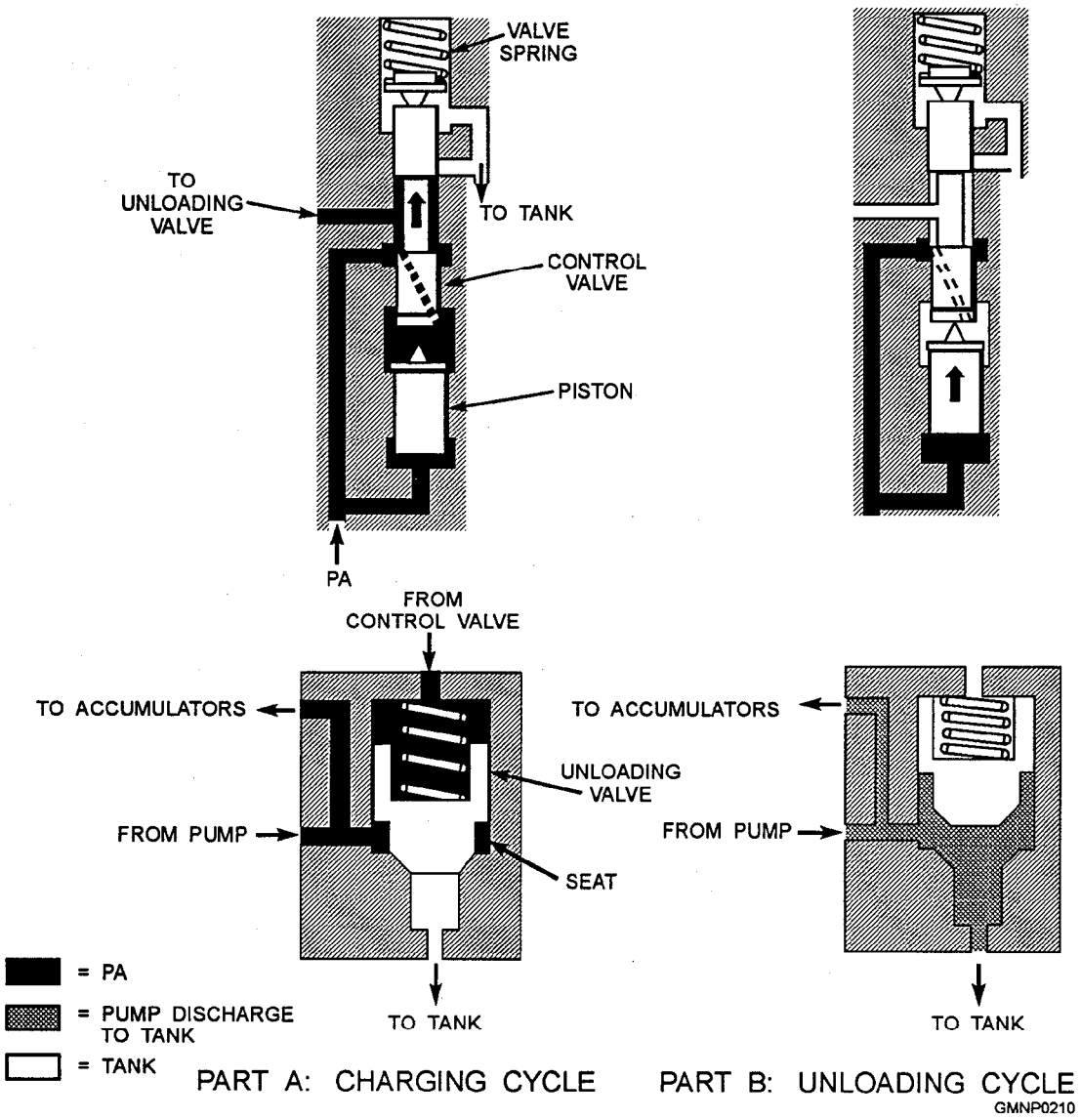

Figure 4-18.—Control and unloading valves.

pressure from the chamber between the control valve and its piston and from the large area side of the unloading valve.

With no pressure in the chamber between the control valve and its piston, the piston moves upward into contact with the valve. Because the piston is larger in diameter (more working area for the fluid pressure) than the control valve, the control valve moves further up against spring pressure.

When the pressure is vented from the large area side of the unloading valve, the pressure in the pump output line, acting on the area around the seat of the unloading valve, overcomes spring pressure and shifts the valve upward. This causes pump output to be discharged to tank.

During the unload cycle, PA, acting on the bottom of the control valve piston, holds the control valve in the UP position against spring pressure. As the pressure in the accumulator system decreases, spring pressure overcomes fluid pressure, moving both the control valve and its piston downward. When system pressure decreases to 950 psi, the upper land of the control valve covers the tank line and the lower land opens the PA line. PA enters the chamber between the control valve and its piston. PA is also ported to the large area side of the unloading valve, forcing it on its seat and beginning another charging cycle.

Pressure Accumulator

Accumulator power drive systems are the most common hydraulic power drives used in ordnance

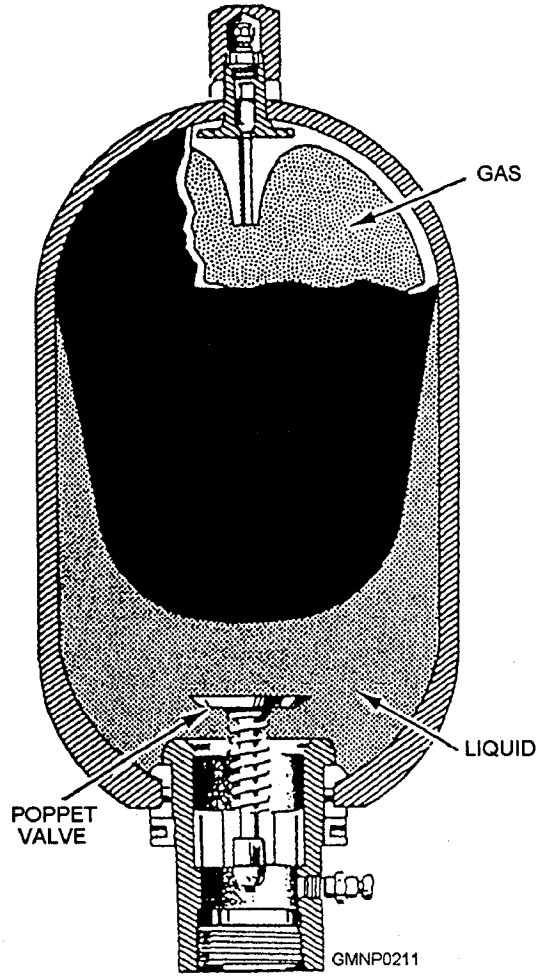

Figure 4-19.—A gas-operated, bladder type of accumulator.

equipment. Instead of having the output flow of the pump of the system being put directly to use operating a mechanism, it is pumped into an accumulator flask. The prime function of the accumulator is to store a volume of fluid under pressure. As the system demands fluid, it is supplied from the flask. The pressure regulator we just described monitors the pressure in the flask, keeping it within prescribed limits. Systems that require a high volume of fluid under pressure will be equipped with several flasks.

Figure 4-19 shows the most common type of accumulator-the gas-operated, bladder type of flask. This accumulator flask uses a nitrogen-filled bladder inside a steel cylinder. The cylinder has a poppet valve to keep the bladder from being pushed into the output line by its nitrogen pressure when the system is not energized. The bladder, filled with nitrogen to a certain pressure, is compressed by the fluid as the cylinder fills. When the upper level pressure is reached, fluid flow from the pump to the accumulator is stopped. The bladder pressure then continues to cause fluid flow, maintaining system pressure. Without the accumulator flasks, the pump of the system could easily fall behind system requirements during times of peak demand.

Pumps and Power Drives

The purpose of a hydraulic pump is to supply a flow of fluid to a hydraulic system. The pump does not

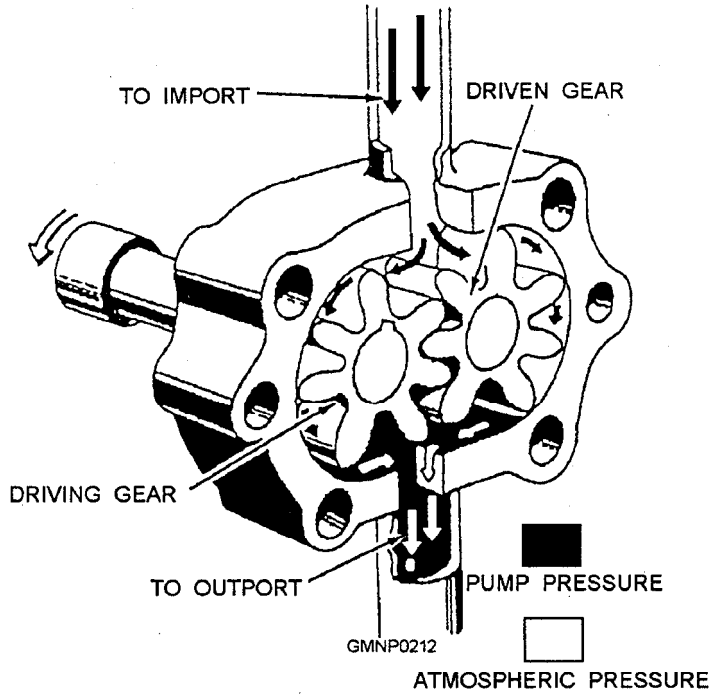

Figure 4-20.—A rotary gear pump.

produce pressure. The pressure is developed in the system due to the resistance of the system to fluid flow. Pumps can be of several different types, but the most common are the rotary gear pump and the axial piston pump.

The rotary gear pump (fig. 4-20) operates by trapping fluid at the inlet (suction) port and forcing it through the discharge port to the system. The gear pump is used throughout ordnance systems to supply fluid flow at a variety of pressures. They are most efficient, however, at pressures around 500 psi. There are several configurations and modifications of the gear pump. These will not be discussed in this text.

The axial piston pump is used in most power drives that require either a variable output or a high-volume output. First, let's describe the principle of operation, then we can show how they are used.

Figure 4-21 shows how the output of an axial piston pump is varied. The pump uses pistons attached to a movable tilt plate. The pistons and cylinder barrel rotate together, driven by an electric motor, between the tilt plate and the valve plate. The tilt plate is moved either left or right by stroking pistons. The larger the tilt angle, the longer the piston stroke and the larger the quantity of pump output. The direction of flow is reversed by reversing the direction of tilt. When the

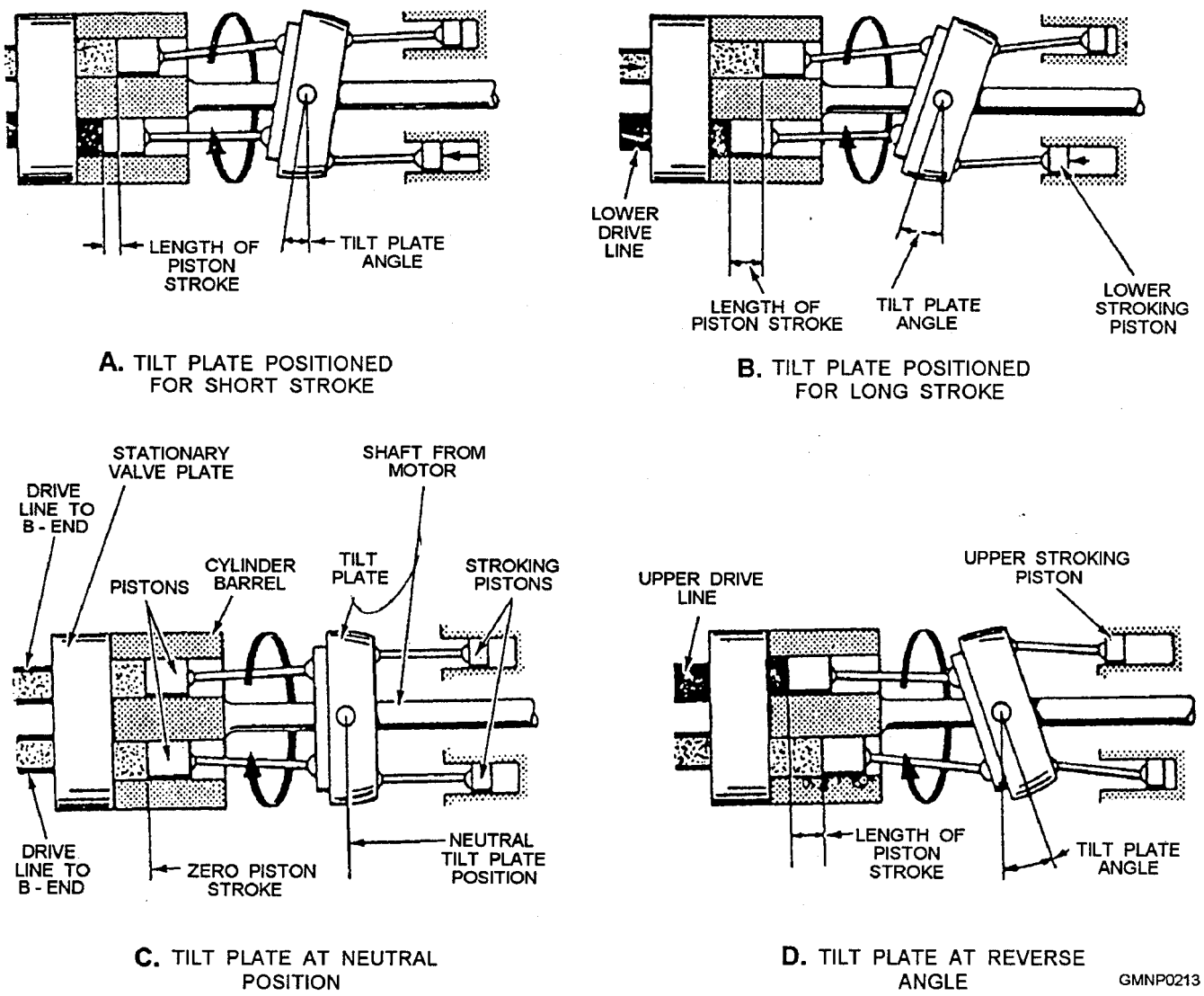

Figure 4-21.—Operation of the axial piston pump.

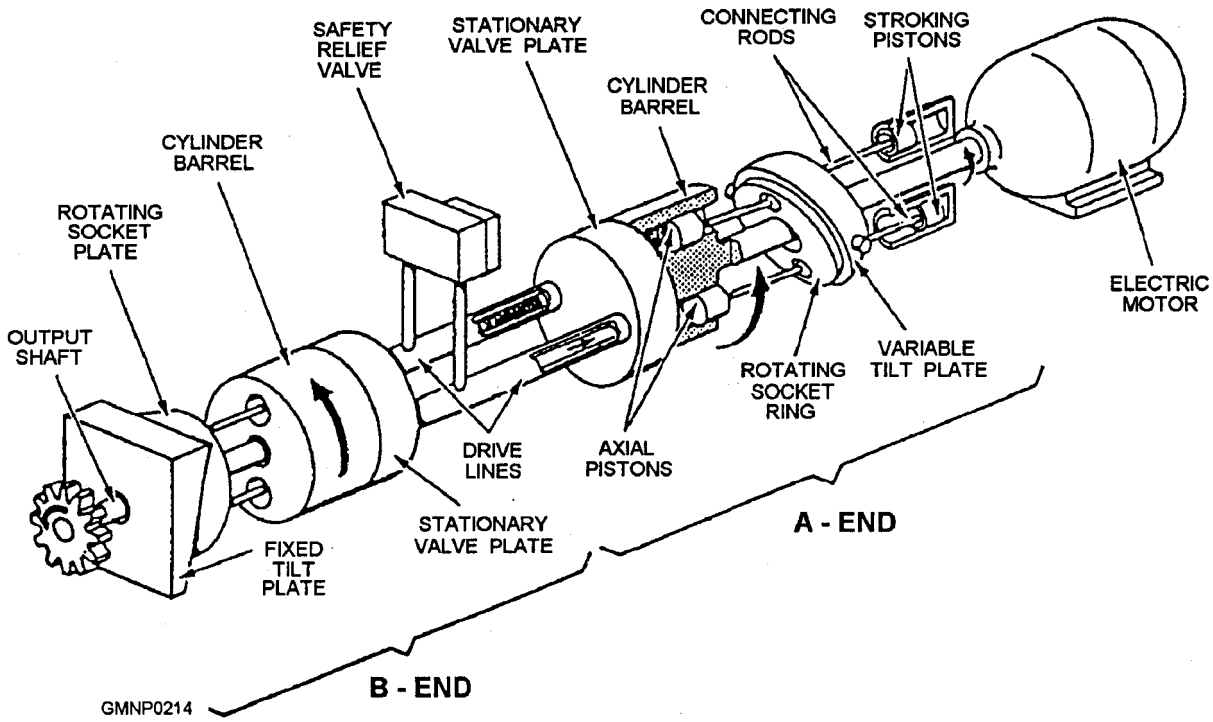

Figure 4-22.—A hydraulic CAB unit.

piston stroke is on zero stroke, there is no pump output, even though the pump is still rotating.

This configuration of the axial piston pump is used primarily for the train and elevation power drives, magazine ready service rings, and loaders on gun mounts and missile launchers. The pump output is used to drive a hydraulic motor. The only difference between the pump (A-end) and the hydraulic motor (B-end) is that the tilt plate is set at a permanent angle. These combination A-end pumps and B-end motors are referred to as CAB units. Figure 4-22 shows a CAB unit setup. The pump output is transmitted to the motor, which operates just the reverse of the pump. The pump takes a mechanical input and turns it into a variable bidirectional hydraulic output. The motor takes a variable hydraulic input and converts it to a variable bidirectional mechanical output.

Another common configuration uses the same pump but with a fixed angle tilt plate. The pump has a constant output that is supplied to an accumulator system with a pressure regulator. This type is used to power most gun mount and missile launcher loading systems.

HYDRAULIC MECHANISMS

Now that we have seen the basic components of a hydraulic system, let's take a look at a hydraulic mechanism. Up to now, we have pumped the hydraulic fluid from the reservoir through the filter and have it regulated to the desired pressure. Now, let's have it do some work.

Glance back to figure 4-8. This is the illustration of the 5"/54 carrier ejector mechanism we used as an example of a mechanical ordnance device. The

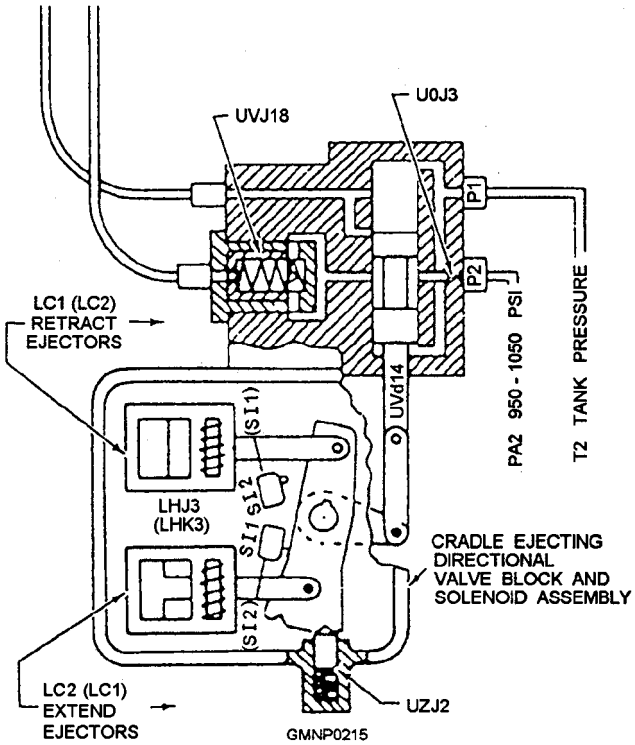

Figure 4-23.—Solenoid housing and valve block.

linkages in the ejector are operated by hydraulic pistons. The pistons extend and retract to operate the ejector. The fluid that moves the pistons is controlled electrically by solenoids. Figure 4-23 shows the inside of a solenoid housing and valve block.

Notice that there are two solenoids attached to the same linkage at opposite ends. The linkage has a pivot point in the middle. The pivot is actually a shaft that extends through the solenoid housing into a hydraulic valve block. The linkage is keyed to the shaft so that when one of the solenoids is energized and moves the lever, the shaft will rotate. Inside the valve block (fig. 4-23), the shaft is attached to a valve. As the shaft is rotated, it positions the valve. One position allows fluid to be ported to one side of the piston, extending it. The other position ports fluid to the other side of the piston, retracting it. When fluid is ported to either side, the other side is opened to allow the trapped fluid to return to the tank. A newer configuration of this same device has the solenoids and valve all in one component. It is used on the newer Mk 45 gun mount. This configuration is also discussed in chapter 5.

For more information on hydraulic systems operation, see the Navy training manual *Fluid Power*, NAVEDTRA 12964, and system maintenance publications.

THE HYDRAULIC-MECHANICAL OPERATION OF A LAUNCHER COMPONENT

LEARNING OBJECTIVES: Identify the major hydraulic-mechanical components used in GMLS and describe the operational function of each component.

Now that we have covered a typical accumulator type of power drive, the next logical step is to see what its PA can do for a GMLS. In the next chapter we will examine its electrical interlock control circuits. The final object for the various extend and retract signal paths was to energize a solenoid. The solenoid initiated the hydraulic-mechanical actions that actually moved the center guide.

We will first discuss the hydraulic components associated with the center guide. We will then extend the unit from its normally stowed position. As we describe these hydraulic-mechanical operations, you may find it helpful to compare the two hydraulic schematics in figure 4-24

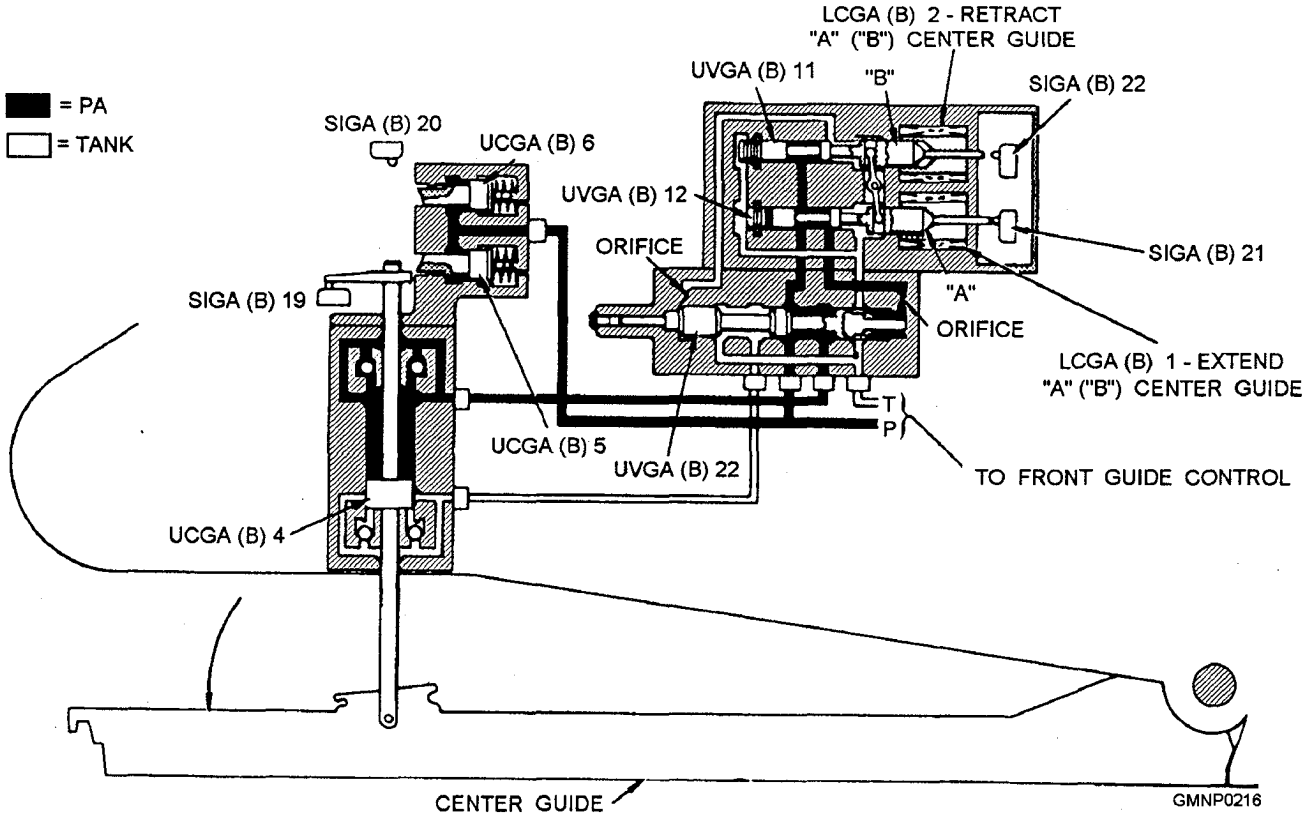

Figure 4-24.—Center guide extend; hydraulic schematic.

(extend cycle) and figure 4-25 (retract cycle).

CENTER GUIDE HYDRAULIC COMPONENTS

The hydraulic components of the center guide include the following:

1. A solenoid assembly
2. A directional control valve
3. A hydraulic cylinder
4. Two latches

All of the components are mounted in the guide arm and are located directly above or near the center guide casting.

The solenoid assembly (shown in figures 4-24 and 4-25) is identified as LCGA(B)l and LCGA(B)2. It is a detente type of unit that is mounted to directional valve UVGA(B)22. Hydraulic fluid from the solenoid assembly controls the position of the directional valve.

The center guide cylinder (fig. 4-26) contains a movable piston UCGA(B)4 and four ball type of check valves. These check valves function to restrict fluid flow and slow down or cushion part of the stroke of the piston. The lower pushrod of the piston connects to the center guide casting and moves it. The upper switchrod (and arm) of the piston actuates the extended and retracted interlock switches SIGA(B)20 and SIGA(B) 19, respectively. The two spring-loaded latches UCGA(B)5 and 6 (refer to figs. 4-24 and 4-25) extend outward to engage the arm on the switchrod. The upper latch slides under the arm to lock the center guide in its retracted position. The lower latch slides over the arm to lock the center guide in its extended position.

When the GMLS is secured, the center guide is normally in the retracted position. It is held thereby the upper latch. After the GMLS is activated, PA is distributed throughout the hydraulic system. Both latches are automatically retracted when PA overcomes latch spring pressure. Since the solenoid is detented, PA is also routed through it and the directional valve to pressurize the bottom (or retract) side of the cylinder. The center guide is held in the retracted position as long as PA is available. The latches will not extend until the GMLS is secured and PA drops below latch spring tension. Figure 4-25 shows the equipment condition just described.

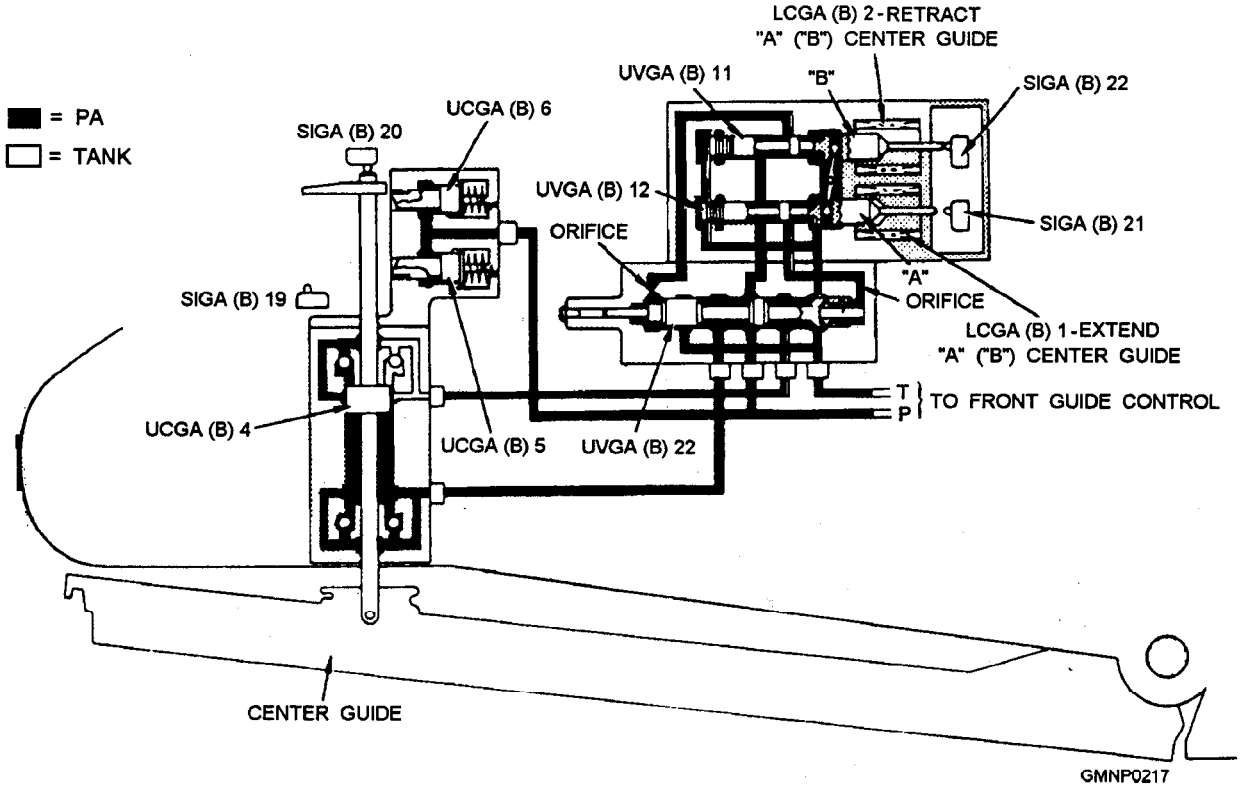

Figure 4-25.—Center guide retract; hydraulic schematic.

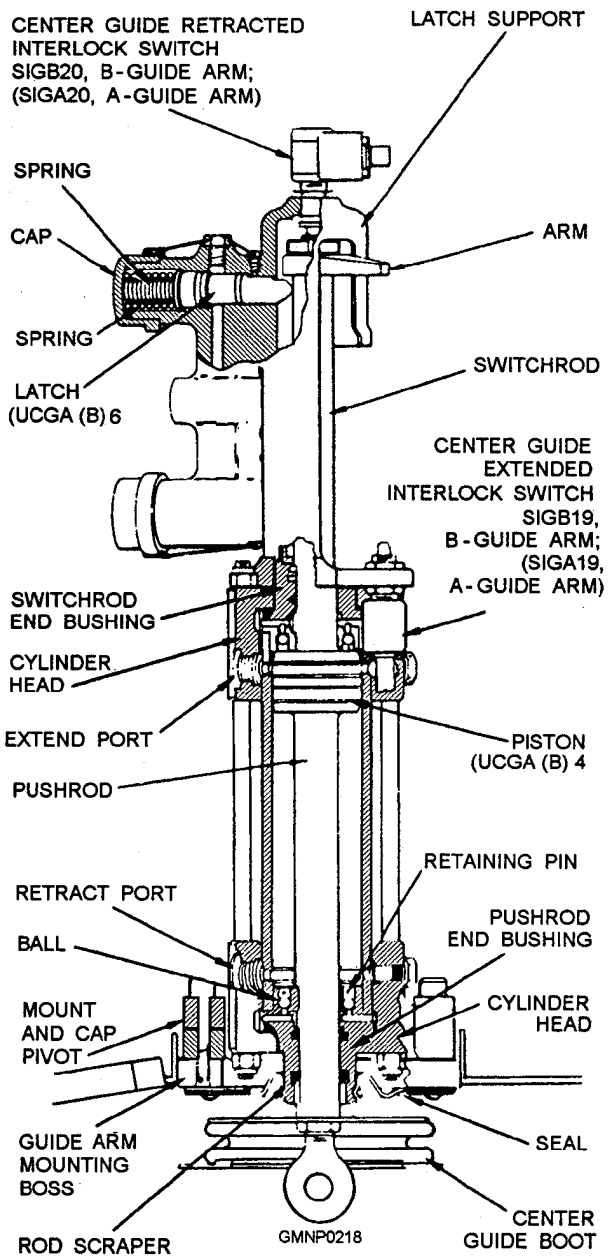

Figure 4-26.—Center guide hydraulic cylinder.

EXTEND CENTER GUIDE OPERATION

The hydraulic-mechanical actions that extend the A-side center guide begin when solenoid LCGA(B)l energizes (fig. 4-24). The detente mechanism is released and UVGA(B)12 shifts to the right. This pivots the rocker arm which shifts UVGA(B)11 to the left. The detente mechanism reengages. At this point, the interlock control circuit has done its job and, in effect, is no longer needed. The remaining actions are all strictly hydraulic and mechanical.

When solenoid valve UVGA(B)11 shifts left, it connects PA on the left end of the directional valve UVGA(B)22 to the tank. By bleeding this fluid pressure to the tank, the directional valve is free to be shitfed. When solenoid valve UVGA(B)12 shifts right, PA is connected to the right end of UVGA(B)22. This fluid pressure causes the directional valve to shift to the left. It is very common to see solenoid valves control a directional valve in this manner. By itself, the solenoid assembly cannot handle the volume requirements of the system, primarily due to its small size. By controlling a larger directional valve, the volume requirements of the system are satisfied.

The speed at which the directional valve UVGA(B)22 can shift is regulated by the two orifices in the end chamber lines. They are installed to prevent a sudden shock to the cylinder. As UVGA(B)22 shifts, it connects PA to the top (or extend) side of the cylinder. It also connects the bottom (or retract) side of the cylinder to the tank.

As PA enters the cylinder, the piston (UCGA(B)4) moves down. This extends the center guide into alignment with the front guide. The piston is tapered at its ends. As it nears the bottom of the cylinder, it gradually closes the tank port and buffs to a smooth stop. The check valves at the top of the cylinder permit a rapid, but controlled, acceleration of the piston. The check valves in the bottom of the cylinder assist in the buffering action as the piston nears the end of its stroke.

To complete the extend cycle, the arm on the switchrod has now actuated interlock switch SIGA(B)19. The switch sends an electrical signal to the coil of control relay (center guide extended) and energizes it. They open and solenoid LCGA(B)l de-energizes.

RETRACT CENTER GUIDE OPERATION

The hydraulic-mechanical operations that retract the center guide begin with energizing LCGA(B)2 (fig. 4-25). They basically reverse the extend cycle actions. We will not go into a detailed explanation of this operation. Study and compare the extend and retract hydraulic schematics and you will see the differences. Retract time is 1.17 seconds.

The GMLS center guide hydraulic-mechanical operation was relatively simple. A piston within a hydraulic cylinder was made to move. Fluid power was converted into a mechanical linear motion. Different hydraulic actuators may convert this fluid power into a rotary type of motion. However, the hydraulic answer

source is still the same-an accumulator type of power drive.

CAB TYPE OF POWER DRIVES

LEARNING OBJECTIVE Identify the major components of a CAB type of power drive system used in GMLSs.

In addition to the accumulator type of power drives, GMLSs also use CAB type of power drives. The main purpose of a CAB type of power drive is to produce a mechanical output. Through a drive train, this mechanical output is used to move or position various GMLS equipments. Launcher carriages, guide arms, loader chains, hoist chains, and RSRs are a few such examples.

The secondary purpose of a CAB type of power drive is to provide certain hydraulic fluid outputs. These fluids are usually identified as servo fluid and supercharge fluid pressures. The application of these fluid pressures is normally limited to the CAB type of power drive that produced them. This differs from an accumulator type of power drive which produced PA. PA was distributed throughout the entire general loading system and, in some cases, to all guide arm components.

A CAB type of power drive is a variable speed, bidirectional hydraulic transmission system. Its main element is a combined A-end/B-end unit or CAB unit. A hydraulic pump (A-end) is joined to a hydraulic motor (B-end) by a valve plate. Driven by a constant speed electric motor, the A-end hydraulically drives the B-end. The B-end converts fluid power into a rotary mechanical motion. The speed and direction of B-end motor rotation (output) is controlled by the A-end.

In the ordnance community, there is one other version of the CAB unit. The unit is called a "Special K" type of installation. It uses one A-end to drive two B-ends. All units are separated by transmission lines. A Special K unit is used by the Mk 13 GMLS RSR/hoist power drive. The principles of operation and many of the individual components are identical among the two (CAB and Special K). We will concentrate on the CAB type of unit.

A typical CAB type of power drive (fig. 4-27) includes the following major components:

1. A-end
2. B-end
3. Dual gear pump

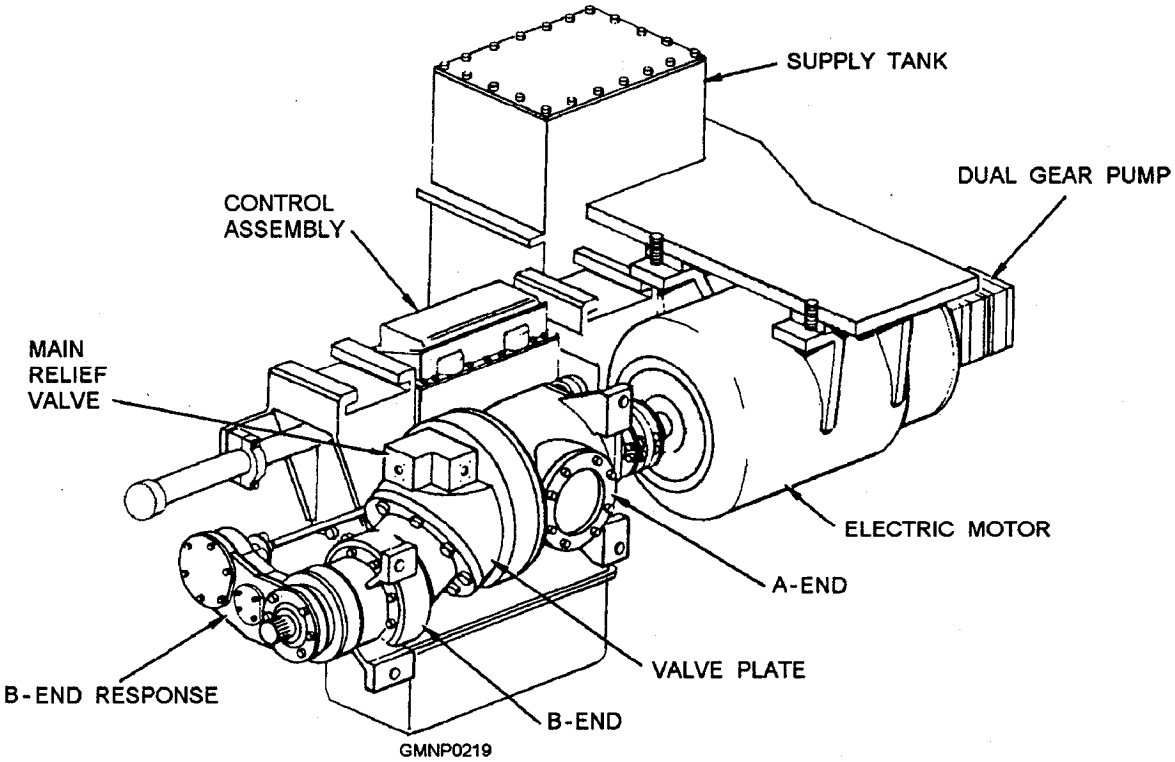

Figure 4-27.—A basic CAB type of power drive.

4. Power-off brake (not shown—see figures 4-25 and 4-26)

,5. Main relief valve

6. Control assembly

As we describe these components, you may find it useful to relate their operation to moving a missile launcher in train. The launcher can train in either direction (left or right) at various speeds.

A-END

The A-end pump of a CAB unit is very similar to a parallel (or axial) piston pump associated with an accumulator type of power drive. The main difference between the two is that the fluid output of an A-end can be varied in its volume and direction. The major components of an A-end are shown in the lower portion of figure 4-28, an A-end and B-end combination.

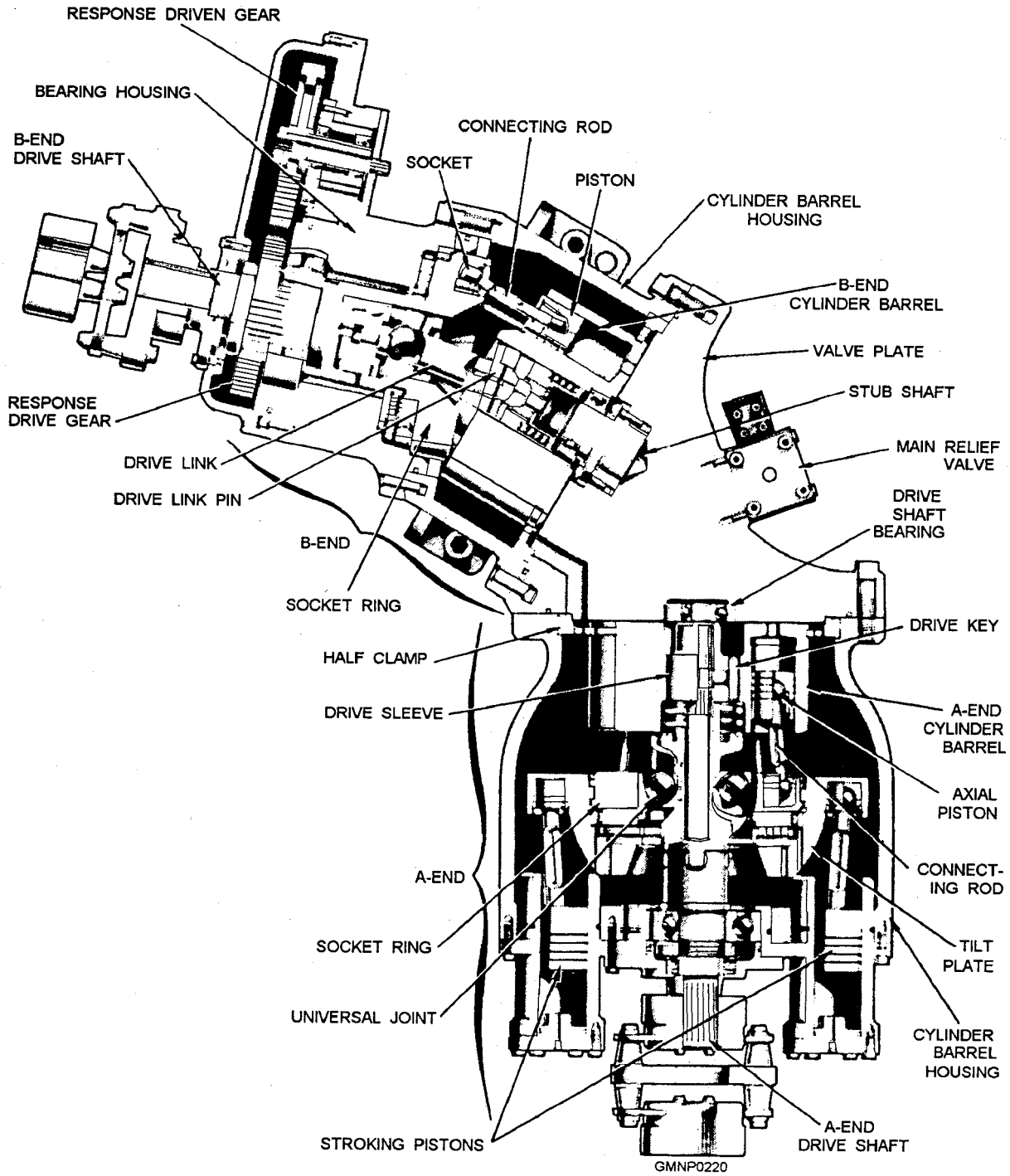

Figure 4-28.—A-end and B-end combination; CAB unit.

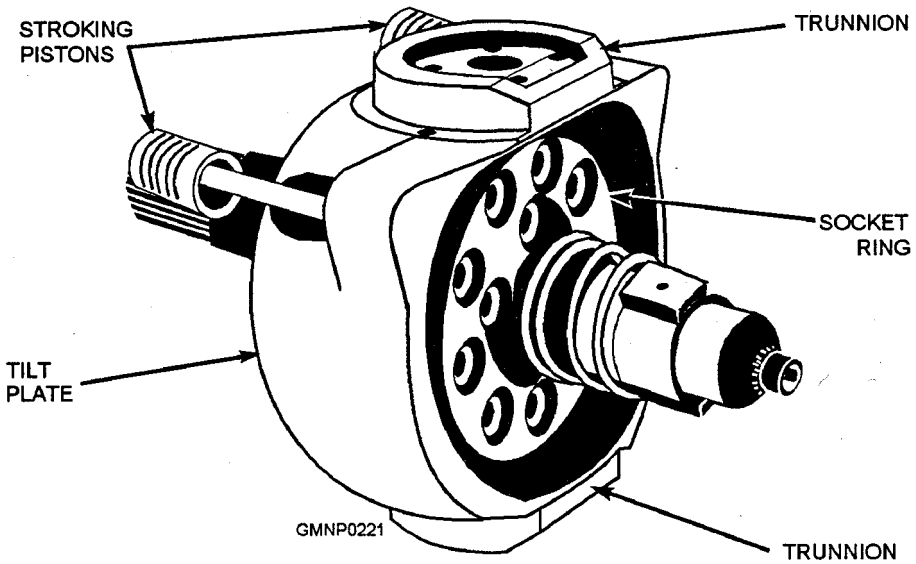

Figure 4-29.—Tilt plate, socket ring, and stroking pistons.

The A-end drive shaft connects to the output shaft of an electric motor. Usually this connection is through a small reduction gear unit and a flexible coupling. The drive shaft imparts rotation to a socket ring through a universal joint. The drive shaft also rotates a cylinder barrel through a sleeve and two lock keys. A bearing in the center of the valve plate supports and holds the drive shaft in place.

The socket ring has evenly spaced sockets for the connecting rods that drive the axial pistons of the A-end. The socket ring rotates within a tilt plate (fig. 4-29). The bowl-shaped tilt plate turns on two integral trunnions that ride on bearings within the A-end housing. The tilt plate does NOT rotate; however, it can be moved or positioned through a limited degree of travel by the action of the two stroking pistons. In a neutral or zero-degree position, the face of the tilt plate is parallel to the face of the valve plate. The tilt plate can be turned or "tilted" a maximum of 20° either side of ZERO position.

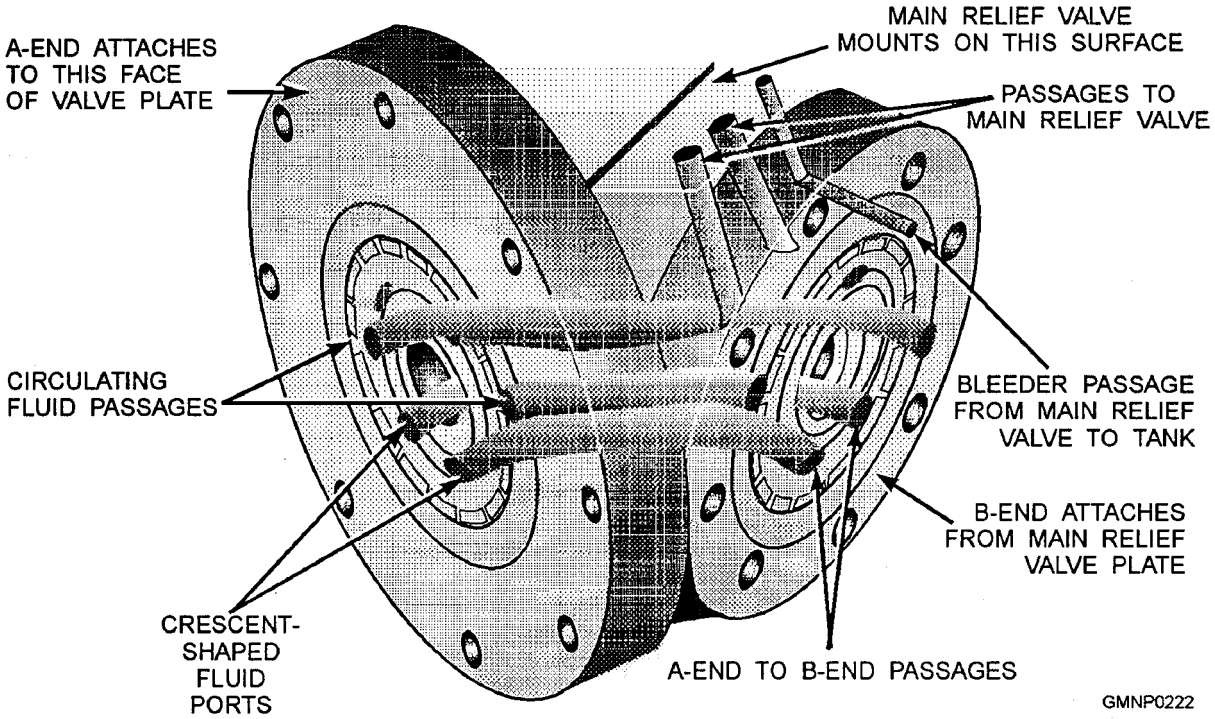

Figure 4-30.—Valve plate.

The two stroking pistons operate inside separate cylinders located behind the tilt plate. Two sockets in the tilt plate housing are for the connecting rods of these pistons. The stroking pistons regulate the angle of the tilt plate anywhere between its 40-degree arc of travel. Any change in tilt plate angle is transmitted to the rotating socket ring. Changing the position of the tilt plate is commonly referred to as applying tilt to the A-end or stroking the A-end. An external control assembly varies the hydraulic fluid pressure(s) supplied to the stroking pistons to apply tilt.

Some CAB units have stroking pistons that are the same size or of equal area. To apply tilt to this type of A-end, the control assembly causes hydraulic fluid pressure to increase on one of the pistons and to decrease on the other. Other CAB units have stroking pistons that are different in size. The area of one piston (the large area piston) is twice that of the other (the small area piston). In this case, the control assembly continuously applies a freed (or regulated) fluid pressure to the small area piston. It also applies a controlled fluid pressure, valued at one half of regulated fluid pressure, to the large area piston. (Remember the formula for force is area times pressure—F = AP.) To apply tilt to this type of A-end, the control assembly varies the controlled fluid pressure to the large area piston. The regulated fluid pressure applied to the small area piston remains constant. With both types of installations, the tilt plate and socket ring are made to move from their neutral positions by an unbalance of forces.

The rotating cylinder barrel bears against and forms a hydraulic seal on the face of the valve plate. The barrel contains an odd number (usually nine) of evenly spaced cylinder bores. They are open on the valve plate end. Pistons in the cylinders are linked to the socket ring by connecting rods. In response to the angle of the tilt plate (and socket ring), these pistons perform the pumping action of the A-end. Hydraulic fluid is ported from the cylinder bores and into the valve plate. A small amount of hydraulic fluid is also ported through holes drilled in the pistons, their connecting rods, and socket balls. This fluid is used to lubricate the bearing surfaces in the socket ring.

The valve plate (fig. 4-30) is like a hydraulic manifold with seven internal fluid passages. It connects the A-end to the B-end, both physically and hydraulically. It also mounts external components. The two main fluid passages have crescent-shaped ports on the valve plate faces (A-end and B-end). These ports separate the intake fluid from the pressurized discharge fluid. Each of these passages is joined by another fluid passage that leads to the main relief valve of the CAB unit. A small-diameter passage from the relief valve serves as a bleeder passage to the tank. The two remaining passages extend through the valve plate. They permit the free exchange or circulation of fluid between the A- and B-ends. This fluid exchange aids in dissipating heat generated within the CAB unit.

The operation of an A-end can be seen in the four views of figure 4-31. Remember which components

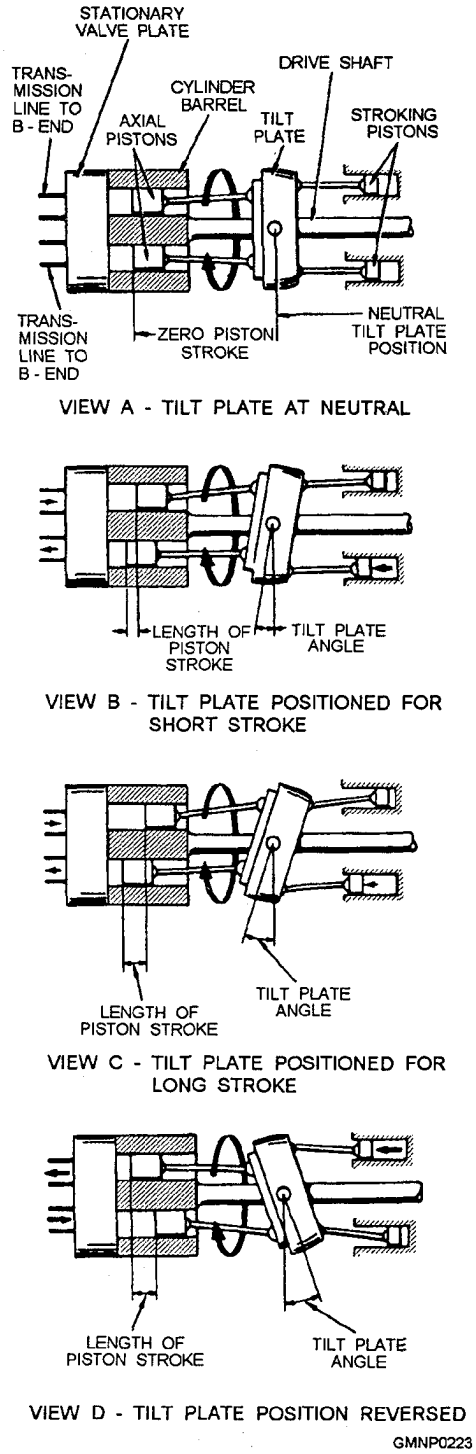

Figure 4-31.—Basic operation of the A-end.

are rotating-the drive shaft, the socket ring, the connecting rods, the pistons, and the cylinder barrel. Remember what the tilt plate and stroking pistons are doing.

View A shows the tilt plate of the A-end on exact neutral. While in this position, the length of every piston stroke is zero. No pumping action is taking place. If you are relating this operation to training a launcher, it is not moving since the pump of the A-end is not providing any output fluid. The fluid pressure in the two stroking piston chambers is either "equal" (if they are the same size) or "balanced" (if they are of different sizes).

View B shows what happens to the components of the A-end when a small degree of tilt is applied to the tilt plate. The control assembly made the bottom stroking piston extend. The connecting rod of the stroking piston pushes the lower end of the tilt plate. The tilt plate repositions the main axial pistons. As the pistons move away from the valve plate, they draw fluid into their cylinders. Suction continues until they reach the end of their intake stroke. Meanwhile, the cylinder barrel has rotated far enough so that the pistons have passed the intake port and are approaching the discharge port.

Now, because of the tilt applied, the pistons reverse and move toward the valve plate. Fluid is forced from the cylinder and through the crescent-shaped discharge port. Actually, several pistons are drawing fluid in while several pistons are discharging. This multiple-piston operation reduces pulsations in the output of the pump. In this example, our missile launcher is training slowly to the left.

View C shows the A-end with the tilt plate at a greater angle. The pistons make longer strokes. Longer strokes mean a greater fluid output volume is supplied to the B-end. The missile launcher is now training faster to the left.

View D shows the A-end with the tilt plate positioned in the opposite direction. Note that almost all of the components have reversed their function, The upper stroking piston now becomes the controlling piston. The intake and discharge lines have reversed. However, the electric motor keeps the drive shaft and all its driven components rotating in the same direction. Our launcher is now training to the right.

B-END

The B-end is the hydraulic motor of the CAB unit. Physically, it is very similar to the construction of the A-end. A B-end converts fluid pressure from the A-end into a rotary mechanical motion. In a CAB unit installation, the B-end is secured to the opposite face of the valve plate. In the Special K type of units, the B-end(s) is/are separately mounted and receive fluid by transmission lines.

The major components of the B-end are shown in the upper portion of figure 4-28. The bearing housing, the cylinder barrel housing, and the valve plate enclose and support the other components of the motor. The unit is sealed to prevent fluid leakage.

The output drive shaft of the B-end rotates on bearings inside the bearing housing. The shaft connects to the mechanical drive train units of the power drive system. It also drives the response gearing of the B-end that provides launcher position information to the control assembly.

The socket ring of the B-end is mounted to the other end of the drive shaft. The socket ring causes the drive shaft to rotate. The socket ring is attached to the cylinder barrel by connecting rods and a drive link and pin.

The cylinder barrel bears on and rotates against the side of the valve plate face of the B-end. The cylinder barrel is bearing-mounted to a stub shaft in the valve plate face. The cylinder barrel of the B-end has the same number of cylinder bores as the A-end. The cylinders are open at their lower end to receive and return fluid to the A-end.

Just as the tilt plate of the A-end had to be tilted to develop a pumping action, the B-end must also be "tilted' to develop a rotation. In relation to the valve plate, the socket ring in figure 4-28 is installed at an angle. The socket ring of the B-end is normally placed at (about) a 30-degree fixed angle. It is sometimes referred to as the "fixed tilt plate" of the B-end.

In operation, the B-end responds directly to the A-end. If the tilt plate of the A-end is on neutral, no pumping action takes place and no fluid transfer is accomplished. The B-end is not rotating in this situation; the missile launcher is stopped.

In view A of figure 4-32, the A-end has gone off neutral and is pumping. The output fluid of the A-end acts on some of the pistons of the B-end and pushes

them. Because of the imposed angle of the "fixed tilt plate," the drive shaft of the B-end starts rotating.

The speed and direction of rotation of the B-end are factors determined by the A-end. The amount of tilt of the A-end determines the speed of rotation of the B-end (small tilt, slow speed; large tilt, fast speed). As long as the A-end is on tilt, the B-end will continue to rotate. When the tilt of the A-end is removed (returned to neutral), the B-end will stop. The direction of rotation of the B-end is determined by the direction of tilt applied to the tilt plate of the A-end. View B of figure 4-32 shows the reaction of the components of the B-end when fluid flow is reversed.

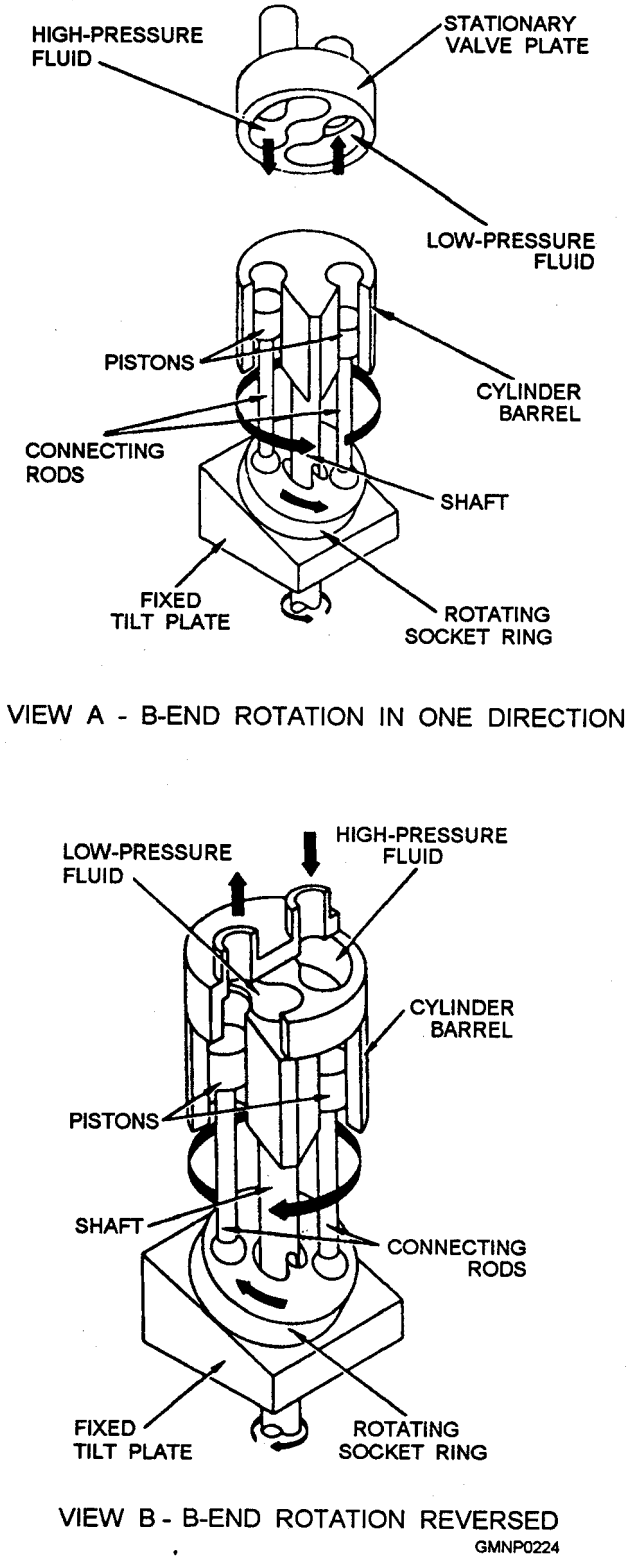

Figure 4-32.—Basic operation of the B-end.

DUAL GEAR PUMP ASSEMBLY

The dual gear pump assembly (fig. 4-33) of a CAB type of power drive is better known as the servo and supercharge pump assembly. The pump housing is physically mounted to the aft end of the electric motor. When the motor is running, a common drive shaft turns both gear pumps. (Meanwhile, the forward end of the electric motor is also driving the A-end.)

The dual gear pump housing is similar to that described with a single gear pump of an accumulator type of power drive. (Refer to fig. 4-20.) A divider plate separates the two pumping chambers. The larger gearset belongs to the servo pump. The smaller gearset is for the supercharge pump. Both pumps share a

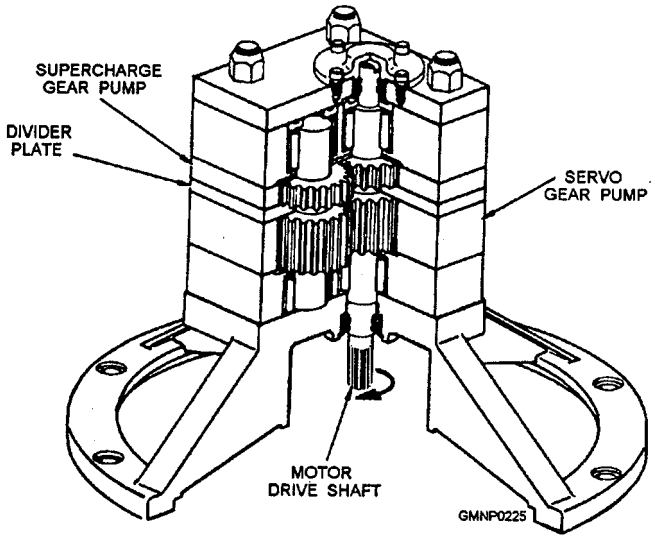

Figure 4-33.—Dual gear pump assembly.

common intake or suction port. They draw their fluid through a suction screen/strainer in the main fluid supply tank.

Two separate output lines direct the discharge fluids to a valve block assembly. Here the fluids are filtered, controlled, and regulated. The servo fluid normally charges a small accumulator and is distributed to the hydraulic system of the power drive. Servo fluid pressure is the higher of the two and, as mentioned before, normally ranges between 400 and 500 psi. It is used for control purposes, primarily in the control assembly of the power drive.

Supercharge fluid pressure is the lower of the two. It does not charge an accumulator and only averages around 100 psi. Supercharge fluid is supplied directly to the CAB unit. Here it compensates for or replenishes fluid lost through internal slippage and leakage.

POWER-OFF BRAKE

The power-off or brake of a B-end of a CAB type of power drive is connected to the output drive shaft of the motor of the B-end. (Refer to fig. 4-34.) When the brake is released, the power drive and the driven equipment are free to move. When the brake sets, it halts the movement of the equipment during a power failure. When the brake is set, it secures the equipment against the roll and pitch of the ship. It also provides for manual hand crank operations during emergency, installation, or maintenance procedures. Some GMLSs use a pneumatic drive mechanism instead of a hand crank, but the force is still applied to the power-off brake.

The main components of a power-off brake are shown in figure 4-35. The lower end of the brake shaft is coupled to the output shaft of the B-end through a gear reduction unit. The other end of the brake shaft is splined to a set of inner friction discs. These inner discs are alternated with outer friction discs. The inner discs rotate with the brake shaft as the B-end turns. The outer set of friction discs is splined to a disc housing. The disc housing and outer discs are fastened to a worm gear drive. The worm shaft extends outside the brake housing and provides for either manual or pneumatic drive connections.

A spring-loaded pressure plate at the top of the brake housing bears against the upper inner disc. The pressure plate is operated by a brake-release piston. Braking action occurs when the pressure plate presses the rotating inner discs into (friction) contact with the stationary outer discs. Through a positive gear-drive relationship between the brake shaft and the drive shaft of the B-end, the load (launcher) comes to a halt.

Figure 4-36 shows a simplified schematic of the "set" and "released" positions of a power-off brake. When the power drive is secured (view B), there is no

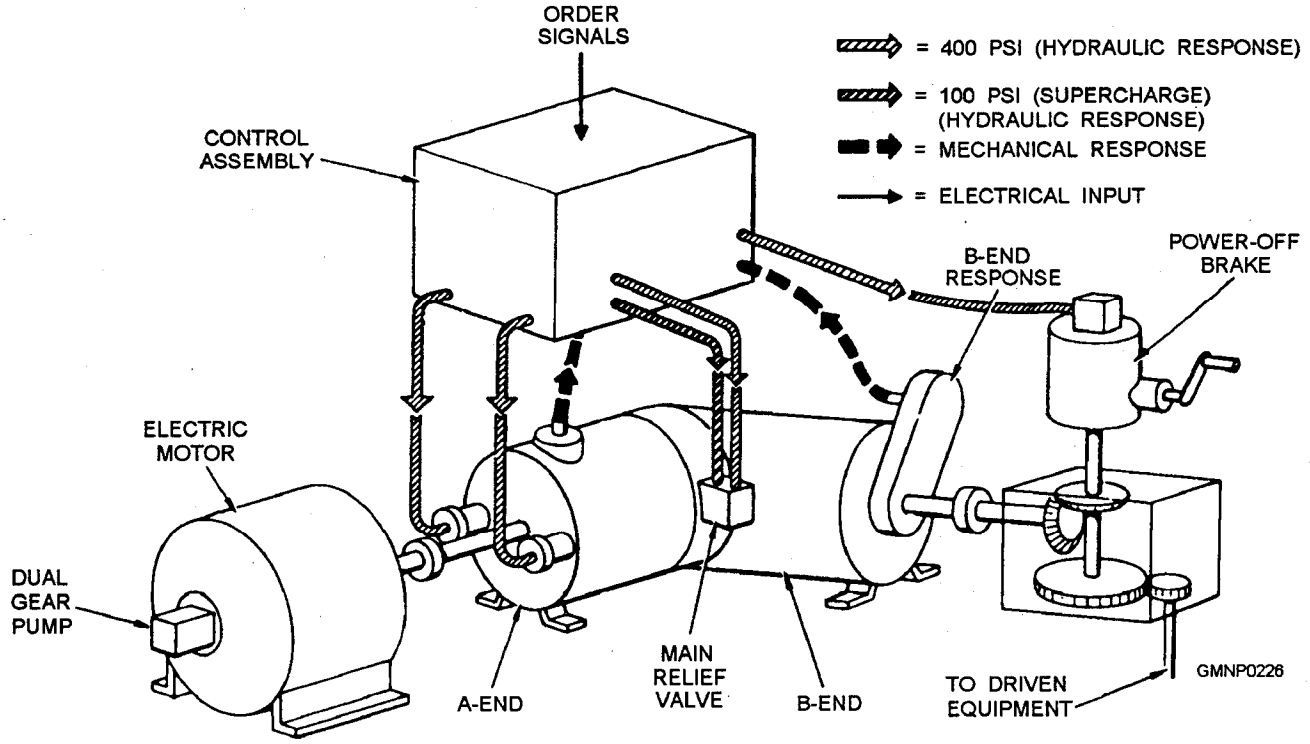

Figure 4-34.—Interaction between a basic CAB type of power drive and a control assembly.

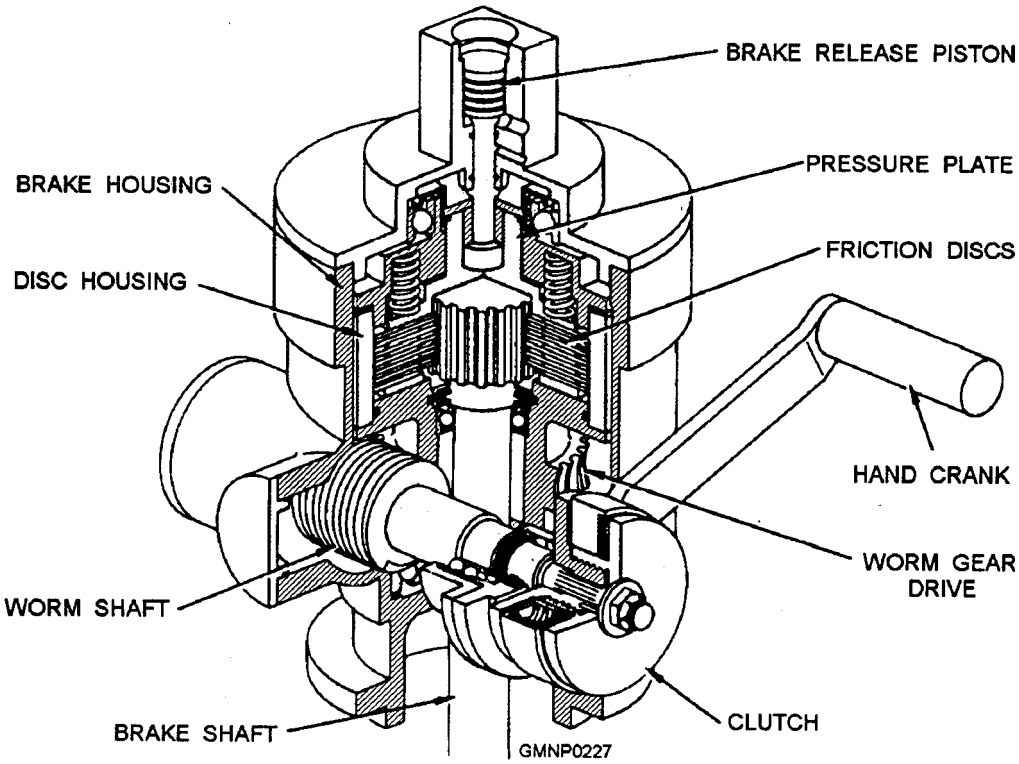

Figure 4-35.—Power-off brake.

hydraulic fluid pressure (normally servo fluid pressure) on (or under) the brake-release piston. The spring-loaded pressure plate forces the friction discs into a braking engagement. Manual or pneumatic drive can now be accomplished by rotating the worm shaft, commonly called "driving through the brake."

During normal power drive operation, servo fluid pressure is ported to the brake-release piston. By "lifting the brake," the friction discs separate, as shown in view A. This action permits free rotation of the brake shaft and the drive shaft/equipment of the B-end.

When an operating power drive is shut down, either normally or through a power failure, a power-off brake solenoid ports the servo fluid pressure to the tank, The pressure plate springs "set the brake." Should a sudden power failure occur, the equipment will not come to a

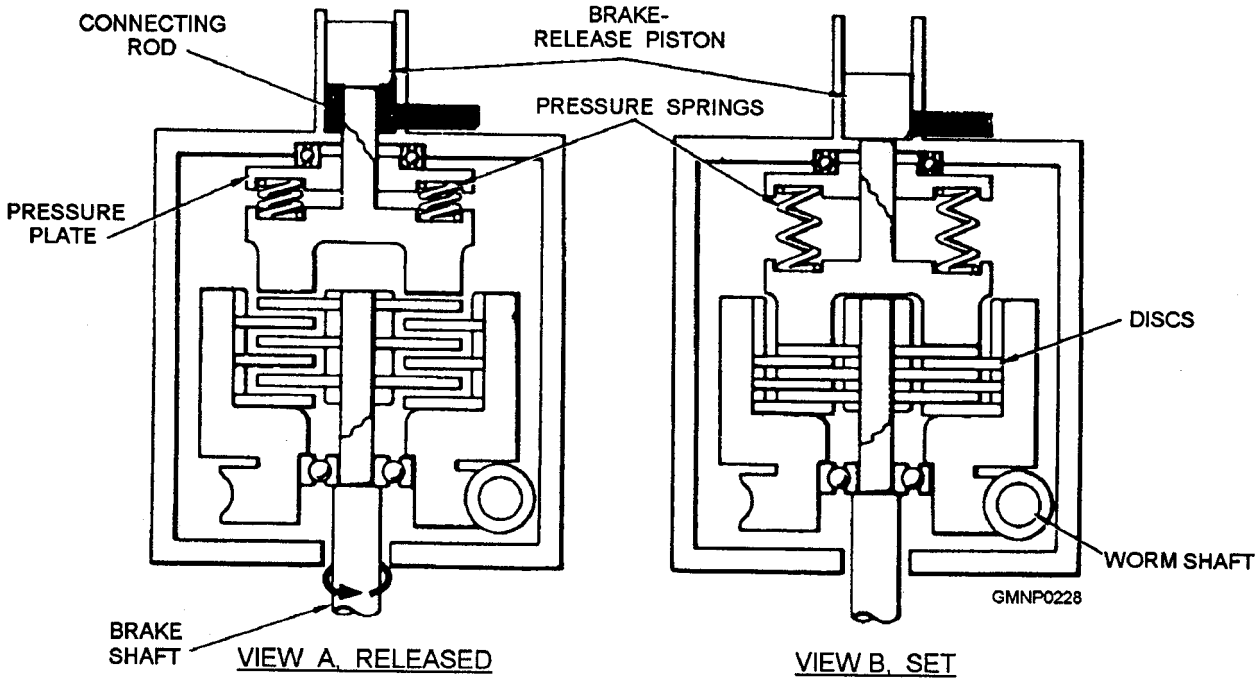

Figure 4-36.—Power-off brake operation.

screeching, abrupt stop. Hydraulically controlled valves in a nearby valve block govern or meter the servo fluid of the piston returning to the tank. This action quickly sets, releases, sets (and soon) the brake to bring the equipment to a smooth and controlled stop.

MAIN RELIEF VALVE

The main relief valve of a CAB type of power drive serves two primary purposes. First, it protects the CAB unit from excessive fluid pressure conditions. Second, it prevents cavitation of the A-end by directing supercharging fluid to the pump.

The main relief valve (also called a safety relief valve) mounts to the outside of the valve plate. (External location can be seen in figs. 4-27 and 4-28.) The valve is connected into both main fluid passages that join the A-end and B-end. In this manner it protects the CAB unit when the A-end is tilted in either direction.

The valve is classified as a compound-relief valve since a small pilot valve controls a larger main valve. The simplified schematics of the main relief valve (figs. 4-37 and 4-38) show its major component parts. The valve works on the differential-in-pressure principle. The area of the main valve plunger exposed in chamber A is equal to the area exposed in chamber B. These two areas combined are equal to that area exposed in all of chamber C. Therefore, the fluid pressure in either chamber A or chamber B must be slightly more than twice the fluid pressure in chamber C to unseat the main valve plunger.

Depending on the direction of CAB rotation, fluid pressure (from the A-end) may build up in either chamber A or chamber B. When the A-end is not pumping, supercharge fluid pressure fills these chambers. The main relief valve fumctions during power drive start, normal, and excessive fluid pressure conditions. The fluid pressures involved are supercharge, servo, and a variable high pressure from the A-end and the tank.

Start Condition Operation

To understand the operation of the main relief valve when the power drive is initially started, you must realize two facts. First, fluid pressures developed by hydraulic systems do not instantly reach their normal levels or values. It takes a few seconds for fluid pressures to buildup to a normal, or at least a minimum, level before they can be effective. Second, tilt plates "drift" or tend to come off neutral at the A-end when the power drive is secured. This means that when the power drive is restarted, the pistons of the A-end are automatically positioned to start pumping to the B-end. The B-end would rotate and move the equipment. This

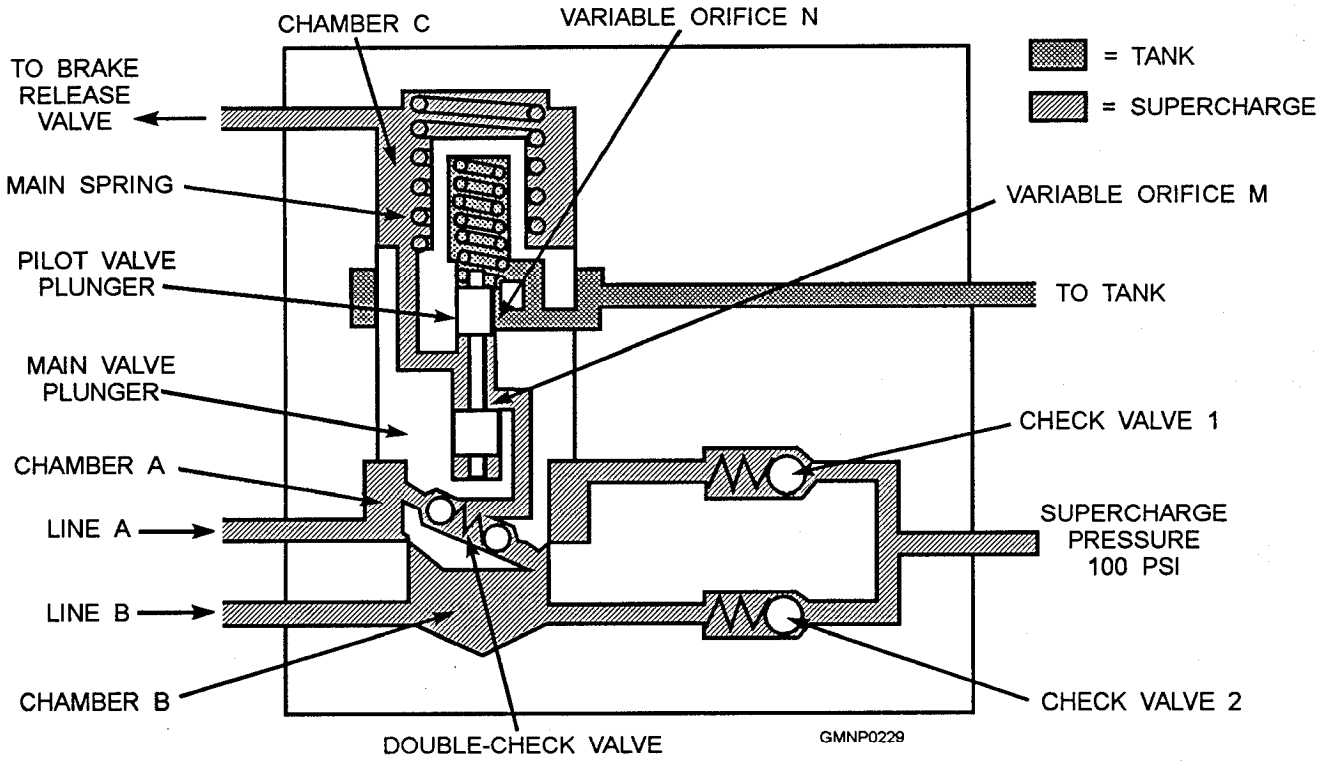

Figure 4-37.—Start condition of a main relief valve.

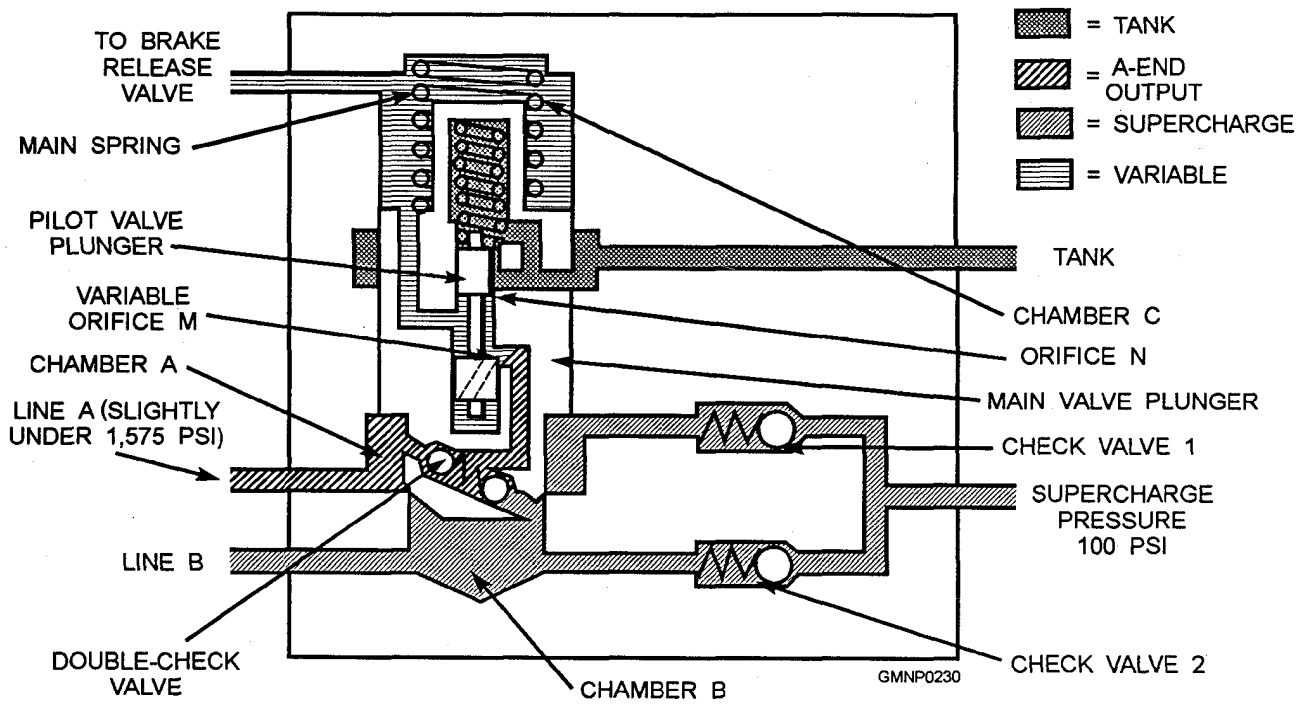

Figure 4-38.—Normal condition of a main relief valve.

could result in damage to certain components (like a power-off brake). It is also dangerous to life and limb if you are unable to jump out of the way fast enough.

The main relief valve performs two important functions when a power drive is started. It directs supercharge fluid, which builds to its low pressure (100 psi) very quickly, to the A-end and power-off brake lines. This initially fills the system to compensate for fluid lost through leakage or which "drained from the lines while the system was secured. The main relief valve also prevents an off-neutral A-end from driving the B-end through a set brake. Refer to figure 4-37 as we see how these actions are performed.

Supercharge fluid enters the relief valve and unseats the No. 1 and No. 2 ball type of check valves, The No. 1 check valve permits fluid to fill chamber A and one transmission line (A) to the A-end. The No. 2 check valve permits fluid to fill chamber B and the other transmission line (B) to the A-end. The double-check valve is also unseated. It allows supercharge fluid to act on the pilot valve. The 100-psi pressure of supercharge fluid is not enough to shift the spring-loaded pilot valve. Therefore, supercharge fluid flows through the lands of the pilot valve plunger and fills chamber C. It is also directed to the brake-release valve. Supercharge fluid initially assists in keeping the brake set until servo fluid pressure can build up and take over.

Since the supercharge fluid pressures in chambers A, B, and C are all equal and acting on the same-size areas (A + B = C), they cancel each other. The large spring of the main valve plunger is rated at about 75 pounds of force. It is the only force holding the valve downward on its seat.

If the A-end is on neutral, there will be no problems or pumping action. If the A-end is not on neutral, one of the transmission lines (line A or line B) will be pressurized. Let's say line A is the pressurized line. Line B is the suction or return line.

As fluid pressure of the A-end enters chamber A, it seats the lower ball of the double-check valve. It also seats check valve No. 1 in the supercharge fluid pressure line. Spring pressure on the pilot valve plunger holds it downward. With the main valve held on its seat by only a 75-pound spring force, any fluid pressure above 75 psi of the A-end causes the main valve to lift. The excess fluid pressure is ported back to the suction line of the A-end (through line B) and bypasses the B-end. The maximum fluid pressure buildup between the A-end and B-end is limited to about 75 psi. That is not enough to move the brake-held B-end.

When the power-off brake solenoid energizes, it positions the release power-off brake and main relief control valve. The valve is positioned so it ports servo fluid pressure to the top of the main valve plunger. This

action seats the main relief valve. With servo fluid pressure on top of the main valve, the pilot valve regulates the pressure in the main relief valve.

Will the main relief valve stay in this condition? No, because, as other fluid pressures build in the system, the control assembly automatically returns the A-end to neutral. Pumping action quickly stops and the main relief valve returns to its seat.

Normal Condition Operation

When all system fluid pressures are available and the GMLS is ready to operate, the main relief valve assumes its normal condition (fig. 4-38). The pilot valve is set to maintain about one half of the fluid pressure of the A-end in its middle chamber. When the A-end goes tilt, high-pressure fluid from line A flows through the diagonal passage drilled in the bottom land of the pilot valve. This high-pressure fluid fills the chamber below the land and forces the plunger of the pilot valve to rise. The lower land moves over variable orifice M while the upper land moves toward variable orifice N.

The plunger is now in its middle position; orifice M is not quite closed and orifice N is just barely open. Only a small amount of high-pressure fluid is allowed to escape to the tank. Very minor overpressure conditions can be relieved this way. Should a small overpressure condition occur (beyond what the pilot valve can handle), the main relief valve will unseat by a few thousandths of an inch. The small overpressure in line A is bypassed to low-pressure line B. In actuality, both the pilot and main relief valves are constantly making these minor adjustments or shifts to maintain CAB unit fluid pressures within normal limits.

Excessive Fluid Pressure Condition Operation

Should the A-end develop an excessive fluid pressure condition, the pressure in the lower chamber of the pilot valve increases dramatically. (Refer to fig. 4-38.) The pilot valve shifts upward, fully closing orifice M and opening orifice N. Fluid in chamber C is vented to the tank through the plunger of the pilot valve. This decreases the force or pressure holding the main valve down.

The excessive fluid pressure in chamber A (or B) now offsets the force of the spring of the main valve. The plunger of the main valve lifts. This action limits pressure of the A-end in the CAB unit to a preset maximum and prevents damage to the power drive.

CONTROL ASSEMBLY

The control assembly of a CAB type of power drive is also known as a receiver-regulator. Basically stated, the control assembly controls power drive operation. Figure 4-34 shows the general relationship and interactions of the control assembly with the rest of the power drive components.

A control assembly is a complex arrangement of electrical, hydraulic, and mechanical components. It receives electrical signals that order the driven equipment to a new position. Components within the control assembly determine the difference between the existing (or actual) position and the ordered position. The difference (or error) is eventually transformed into hydraulic valve movements. These valve movements cause the stroking pistons to shift and apply tilt to the A-end. This drives the B-end and driven equipment to the ordered position.

As the equipment moves to the new position, it is continually feeding back information to the control assembly. This feedback is known as response and involves A-end and B-end inputs. As the equipment nears the ordered position, feedback reduces the position-difference (or error) in the control assembly. Through either a decreasing electrical error signal or a mechanical limiting action, the angle of A-end tilt decreases. This action decelerates the moving equipment until it stops at the ordered position.

The description of a control assembly has purposely been brief. In chapter 5, we will examine the different types of GMLS control assemblies in more detail. For now though, concentrate on the hydraulic-mechanical aspects of a CAB type of power drive, primarily the CAB unit.

76-MM 62-CALIBER GUN MOUNT MARK 75 HYDRAULIC SYSTEM

LEARNING OBJECTIVE: Describe the hydraulic system and components used in the Mk 75 gun mount.

The hydraulic system for this gun mount provides hydraulic pressure for operation of the ammunition-handling system and the cold recoil jacks. The hydraulic power unit (fig. 4-39) supplies the fluid system and develops the pressure for operation of the hydraulic components in the system. The five main

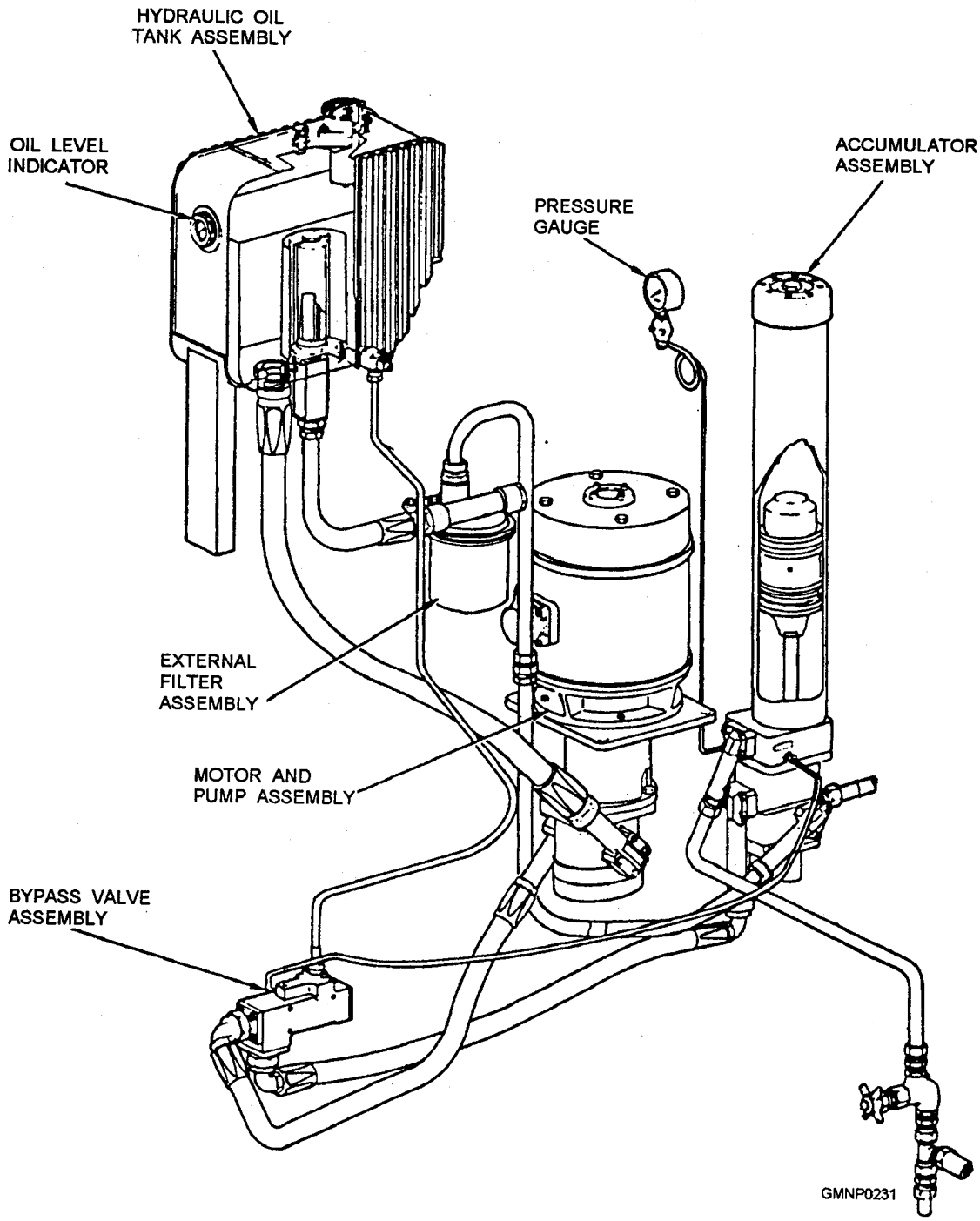

Figure 4-39.—Hydraulic power unit.

assemblies of the hydraulic power unit are the hydraulic oil tank, the filter, the motor and pump, the accumulator, and the bypass assemblies.

HYDRAULIC OIL TANK ASSEMBLY

The hydraulic oil tank assembly serves as a reservoir and expansion chamber for the hydraulic fluid. It also provides a static head of pressure for the hydraulic system. Corrugated external surfaces on the tank help dissipate heat generated by the system. An oil level indicator provides a means to quick-check the quantity of hydraulic fluid in the system.

FILTER ASSEMBLY

A full-flow cartridge type of filter assembly removes contaminants from the hydraulic fluid as the fluid flows through the filter element. The filter is in the return line to the hydraulic oil tank.

MOTOR AND PUMP ASSEMBLY

An electric motor drives a gear pump that supplies hydraulic fluid under pressure to the several components of the hydraulic system. A flexible coupling connects the motor to the pump.

ACCUMULATOR ASSEMBLY

The accumulator assembly serves to cushion pulsations in the hydraulic system. It also stores a supply of pressurized hydraulic fluid to augment pump delivery during brief periods of peak demand. A

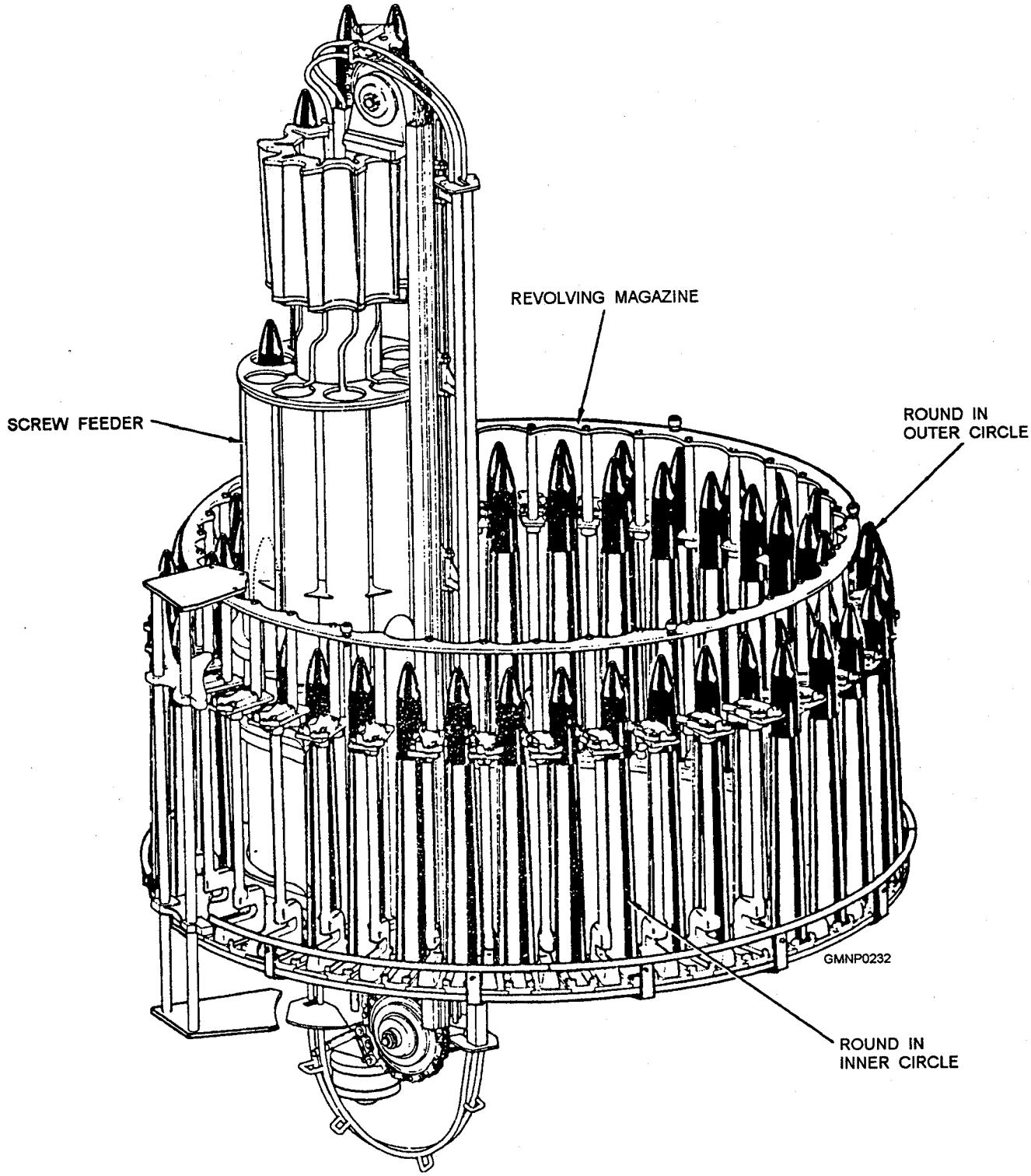

Figure 4-40.—Revolving magazine and screw feeder.

nitrogen charge in the accumulator keeps a constant preestablished head of pressure in the system. The accumulator is connected to a pressure gauge and has a safety valve to prevent damage from overpressures on the system.

BYPASS VALVE ASSEMBLY

The bypass valve assembly reduces the starting load on the electric motor and the pump. As the motor starts, the bypass valve ports the pump output to the tank until the motor reaches operating speed. When the motor and the pump are shut down, the bypass valve automatically dumps the accumulator pressure to the hydraulic oil tank.

LOWER GUN-LOADING SYSTEM

The lower gun loading system supplies ammunition to the upper gun-loading system. A revolving magazine and a screw feeder are the principal parts of the lower gun-loading system.

Revolving Magazine

The revolving magazine (fig, 4-40) stows ammunition and delivers it to the screw feeder. Ammunition stowage cells in the magazine are arranged in two concentric circles—an inner circle and an outer circle. The circles hold 70 ready-to-fire rounds of ammunition. As the magazine rotates, ammunition passes from the outer circle to the inner circle.

Screw Feeder

The screw feeder (fig. 4-41) receives ammunition from the revolving magazine and hoists ammunition to the last station screw feeder for delivery to the upper fun-loading system. A hydraulic motor, driving through a hoist reduction gear assembly, rotates the screw feeder and drives the hoist lift pawl assemblies. The revolving magazine is geared to the screw feeder so both the screw feeder and the revolving magazine rotate in unison.

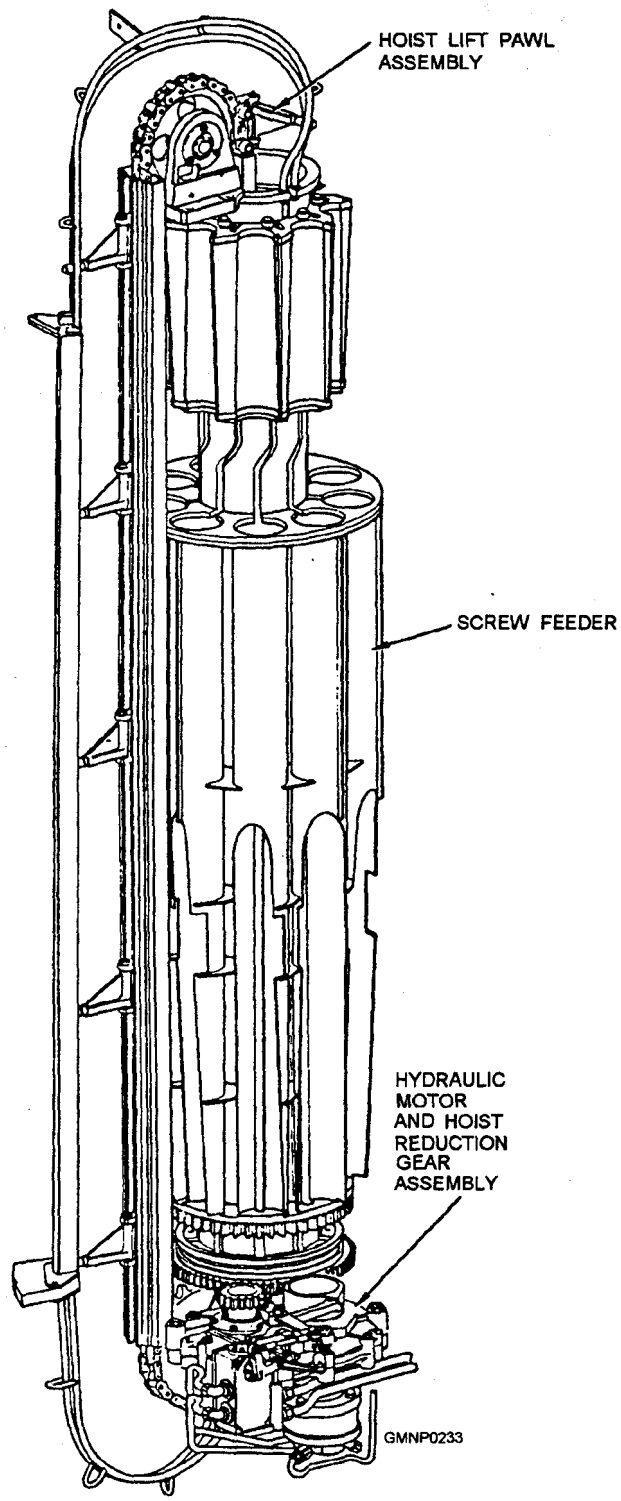

figure 4-41.—Screw feeder and related components.

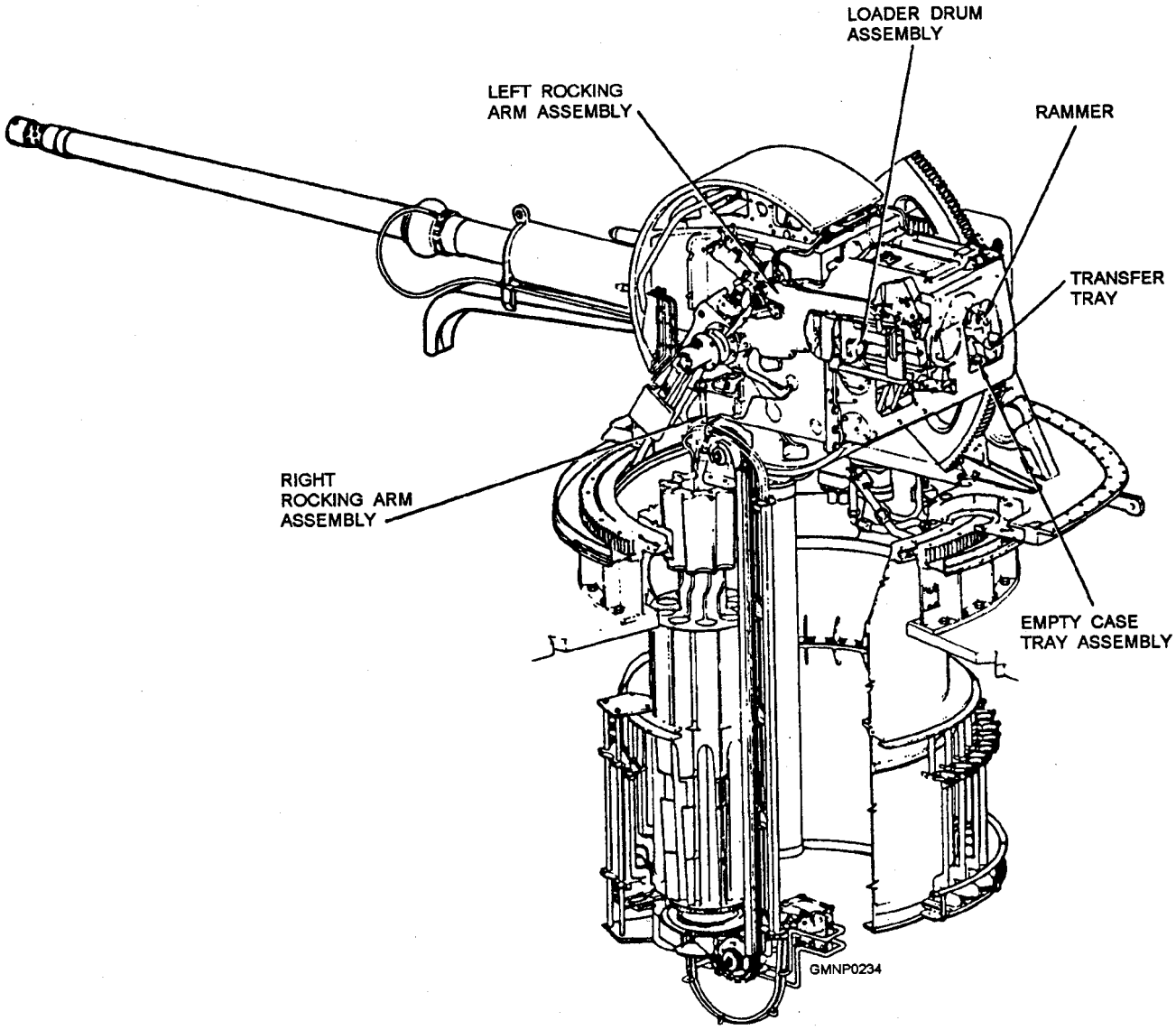

Figure 4-42.—Upper gun-loading components.

UPPER GUN-LOADING SYSTEM

The upper gun-loading system (fig. 4-42) positions and holds ammunition for ramming into the gun barrel chamber. A pair of rocking arm assemblies, a loader drum assembly, and a transfer tray mechanism assembly are the principal parts of the upper gun-loading system.

Rocking Arm Assemblies

Right and left hydraulically operated rocking arm assemblies (fig. 4-43) transfer ammunition from the last station screw feeder to the loader drum. The two rocking arms differ somewhat in configuration but function in the same manner. Both arms pivot on a shaft that passes through the left trunnion of the slide assembly.

In operation, the rocking arms have a swinging motion and move alternately in opposite directions. When one arm is at the end of its upward travel to

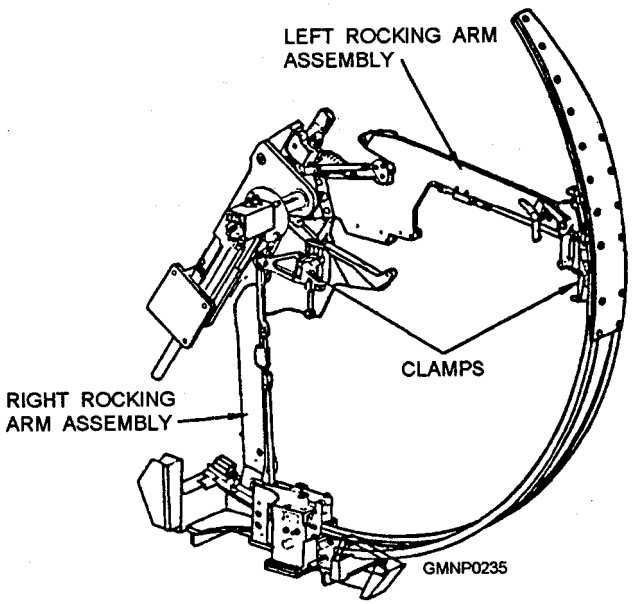

Figure 4-43.—Rocking arm assemblies.

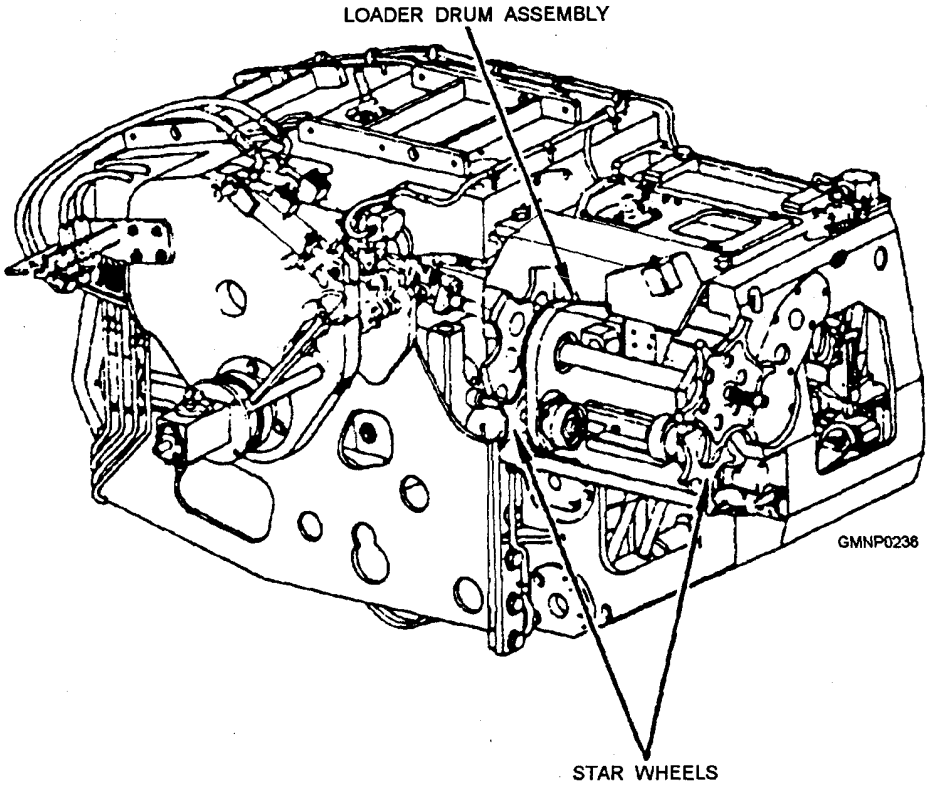

Figure 4-44.—Location of loader drum assembly.

deliver a round to the loader drum, the other is at the end of its downward travel to take around from the last station screw feeder.

Hydraulically and mechanically operated clamps at each end of the rocking arms hold ammunition while in transit between the screw feeder and the loader drum. When a rocking arm reaches the loader chum, the clamps on the raised arm open to release around to the loader drum. Simultaneously, the clamps on the lowered arm close to take a round from the last station screw feeder.

Loader Drum Assembly

The hydraulically operated loader drum assembly (fig. 4-44) is synchronized with the operation of the rocking arms. The loader drum has two shaft-mounted disks (star wheels) with U-shaped cutouts to receive ammunition from the rocking arms. A round received by the loader drum is moved, one position at a time, through four stations. From the last station, upon completion of the firing circuit, a round is deposited in the transfer tray for ramming into the gun barrel chamber.

A set of star wheels below the loader drum accepts ammunition from the rocking arms and transfers it to the loader drum. Another set of star wheels (not shown) is geared to the loader drum. These star wheels receive ammunition from the loader drum and deposit it into the transfer tray.

Transfer Tray Mechanism Assembly

The transfer tray mechanism assembly (fig. 4-45), within the slide, receives ammunition from the loader drum and positions it for ramming into the gun barrel

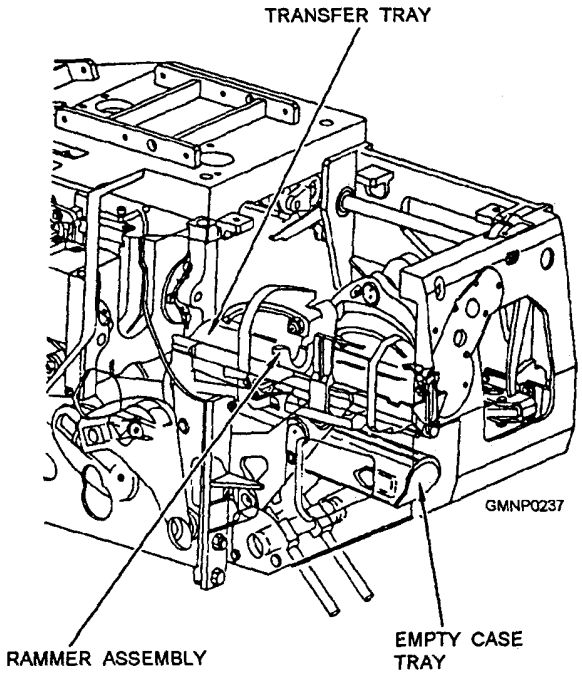

Figure 4-45.—Transfer tray mechanism assembly.

chamber. The transfer tray is connected to the upper part of the slide and, through linkages, to the breech housing support. During recoil and counterrecoil actions of the gun, the transfer tray moves in an up and down swinging arc.

As the gun moves in recoil, the transfer tray swings from the DOWN position to the UP position. In the UP position, the transfer tray is aligned with the loader drum to receive a round.

The empty case tray is attached to the lower part of the transfer tray frame. As the gun recoils, the empty case tray moves up into alignment with the breech end of the barrel to receive the spent cartridge case. As the gun moves in counterrecoil, the loaded transfer tray swings from the UP position to the DOWN position to align the round for ramming into the barrel chamber.

The rammer assembly is within the transfer tray mechanism assembly. Movement of the transfer tray operates the rammer assembly. As the tray moves to the DOWN position (in counterrecoil), the rammer assembly extends, performing two functions: (1) it rams a round into the gun barrel chamber and (2) it pushes the ejected spent case of the previously fired round out of the empty case tray into the empty case ejector chute. The spent case then ejects through the chute and out of the gun mount.

EQUILIBRATOR AND COMPENSATOR ASSEMBLIES

The equilibrator and compensator assemblies (fig. 4-46) operate together to perform three functions:

1. Counterbalance the gun.

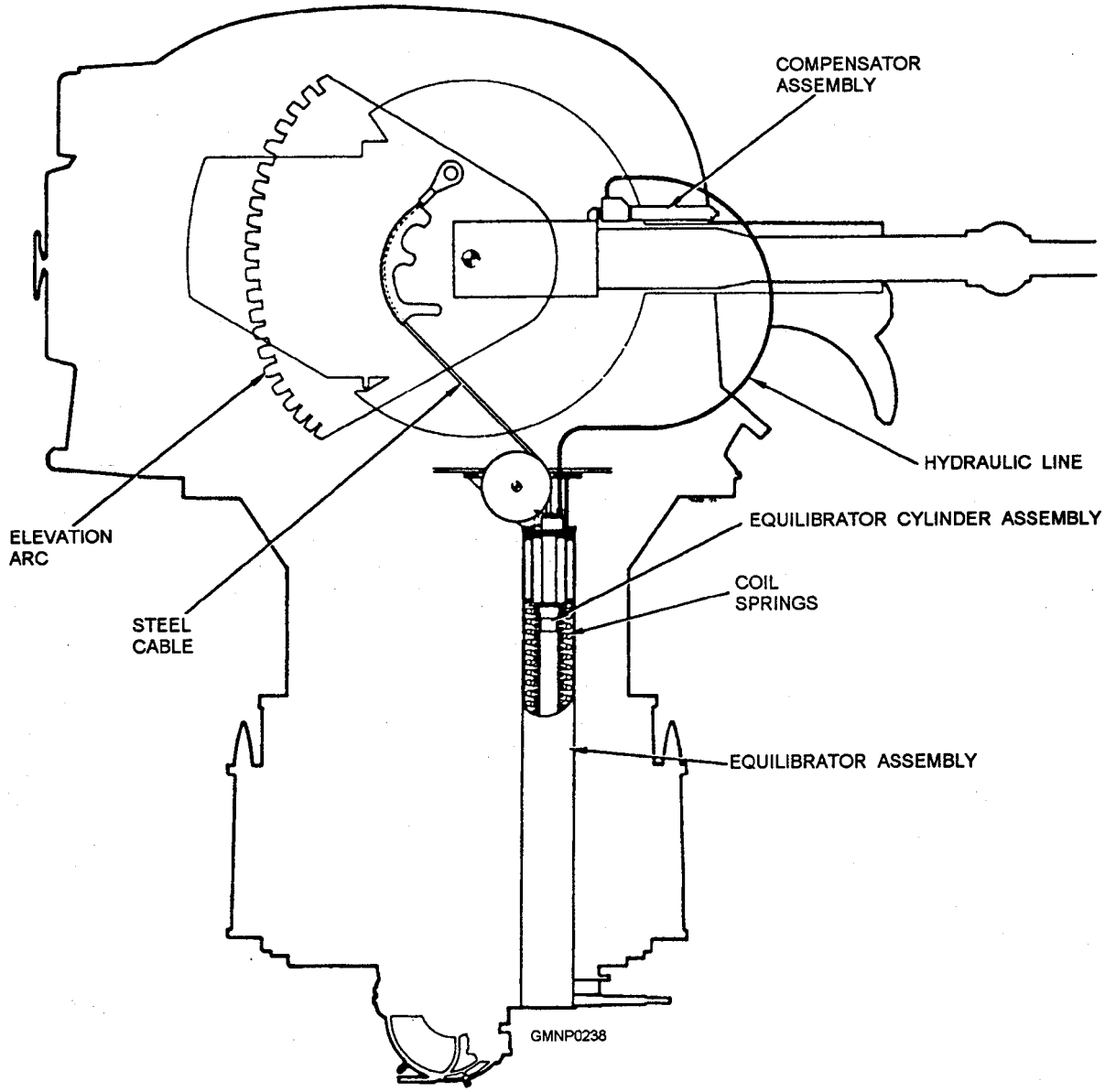

Figure 4-46.—Equilibrator and compensator assemblies.

2. Compensate for the shifting center of gravity of the barrel and breech assemblies that occurs during recoil/counterrecoil and during elevation/depression movements.

3. Stop counterrecoil movement of the gun if a short recoil fails to eject the empty powder case from the gun barrel.

The equilibrator is attached to the bottom of the carriage and extends down inside the revolving magazine assembly. It consists of an equilibrator cylinder assembly and two sets of coil springs. A steel cable extends from a spring seat at the bottom of the equilibrator to the elevation arc. In operation, the coil spring tension pulls on the steel cable to counterbalance the gun as it elevates and depresses.

The compensator assembly is a hydraulic cylinder attached to the slide above and parallel to the gun barrel. A hydraulic line connects the compensator assembly to the equilibrator cylinder assembly in the equilibrator.

As the gun recoils and counterrecoils, the porting of hydraulic fluid between the compensator assembly and the equilibrator cylinder assembly changes the position of the upper spring seat in the equilibrator. This, in turn, varies the counterbalancing spring tension on the steel cable attached to the elevation arc. As the gun moves back in recoil, less counterbalancing force is needed; conversely, when the gun moves forward in counterrecoil, more counterbalancing force is needed.

The compensator assembly prevents the flow of hydraulic fluid into the equilibrator cylinder if a short recoil fails to bring the gun back to the hooks position (or if the hooks fail to engage the gun). This prevents counterrecoil of the gun.

SLIDE ASSEMBLY

The slide assembly (fig. 4-47) is suspended between the two trunnion supports. The slide serves as a support structure for the gun mount components that elevate and depress. The main components of the slide are the following:

1. Breech mechanism
2. Recoil/counterrecoil system
3. Recoil/counterrecoil dampers
4. Cold recoil jacks
5. Gun port shield
6. Elevation arc
7. Trunnions
8. Firing cutout mechanism

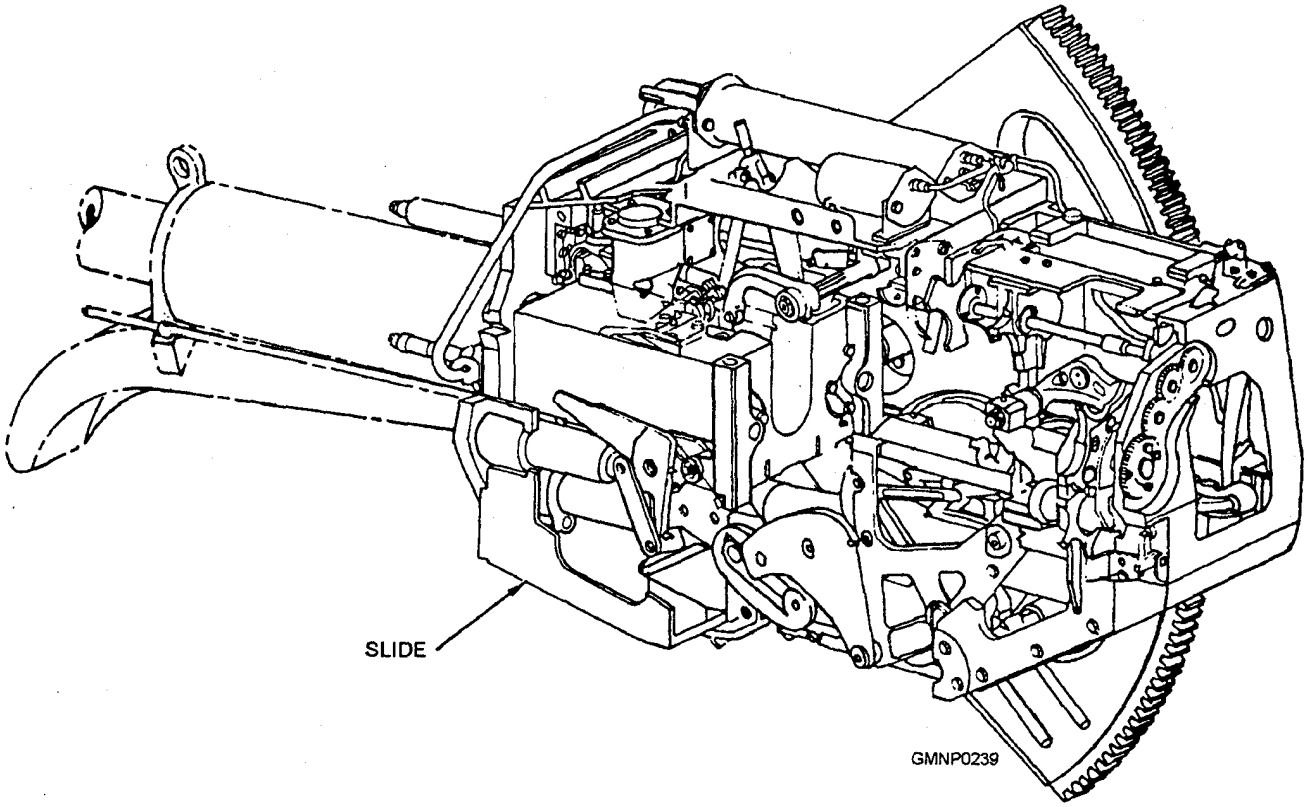

Figure 4-47.—Slide assembly.

9. Counterrebounding mechanism

Only the recoil/counterrecoil system and cold recoil jacks will be discussed in this chapter. For a detailed description of the MK 75 slide assembly, refer to *Technical Manual for 76-mm 62-Caliber Gun Mount Mark 75 Mods 0 and 1, Description and Operation, SW314-AO-MMM-A1O series.*

Recoil/Counterrecoil System

The recoil/counterrecoil system (fig. 4-48) controls movement of the gun during the recoil and counterrecoil strokes. The system consists of two recoil cylinders, connected hydraulically to a recuperator, and performs five functions:

1. Absorbs gun recoil force to ensure prescribed recoil lengths
2. Maintains a nearly constant recoil force throughout the recoil stroke
3. Stores energy to return the gun to battery
4. Regulates the counterrecoil stroke to keep it within the prescribed rate-of-fire limits
5. Brakes recoil and counterrecoil movement at the end of their strokes

The recuperator is a hydropneumatic device having separate chambers for hydraulic fluid and nitrogen. During the recoil stroke, the energy developed by the recoiling gun is absorbed by the recuperator and the recoil cylinders. The energy absorbed by the recuperator is stored as pressure by compressing the nitrogen. The energy absorbed by the recoil cylinders is dissipated by the resistance to the flow of hydraulic fluid through throttling grooves between the stationary and moving parts of the cylinders.

During counterrecoil, the energy, stored in the recuperator as pressure, moves the gun from its maximum recoil position to the gun-at-hooks position. When the gun is released by the gun releasing mechanism, the pressure stored in the recuperator moves the gun to the in-battery position. In this phase of counterrecoil, the recoil cylinders act as stroke regulators and release energy stored by the recuperator at a regulated rate.

Cold Recoil Jacks

Two hydraulic cold recoil jacks (fig. 4-49) are on the forward part of the slide. The recoil jacks are primarily for maintenance work to move the gun in and out of battery. They also move the gun to the hooks position in preparation for firing.

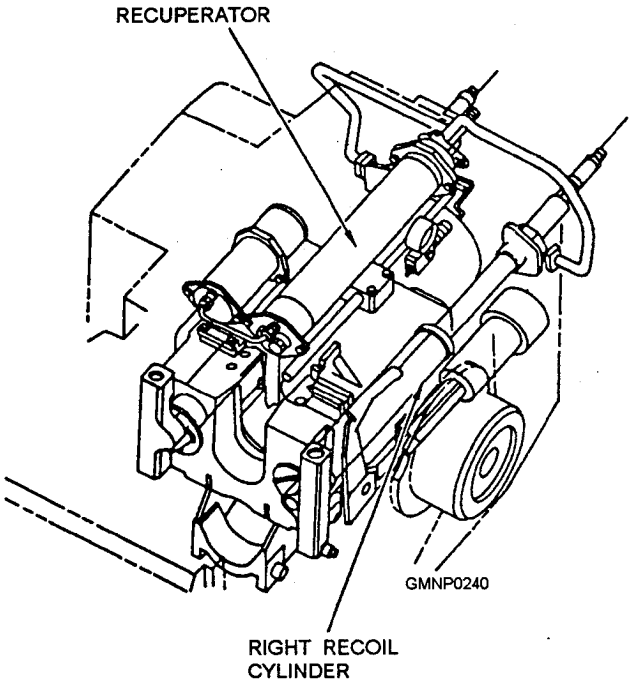

Figure 4-48.—Recoil/counterrecoil system.

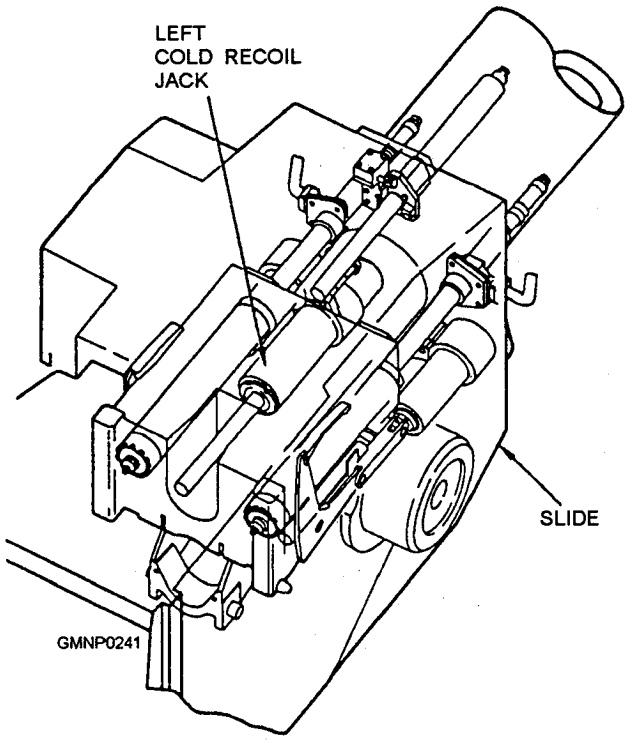

Figure 4-49.—Location of cold recoil jacks.

AMMUNITION-HANDLING SYSTEM

The ammunition-handling system (fig. 4-50) for the gun mount moves ammunition from the revolving magazine to the last station loader drum where the ammunition is subsequently deposited into the transfer tray, rammed, and fired. The ammunition-handling system holds a maximum of 80 rounds of ammunition. When around is fired, each of the other rounds advances one position.

The ammunition-handling system consists of the revolving magazine, the screw feeder and hoist system, the right and left rocking arm assemblies, the loader drum assembly, and the hydraulic power unit. The entire ammunition-handling system moves with the gun mount in train. The loader drum, which is mounted within the slide, moves with the gun in elevation.

The hydraulic power unit, mounted on the carriage, provides the hydraulic pressure to operate components of the ammunition-handling system. A hydraulic motor drives the revolving magazine and the screw feeder and hoist. Hydraulic cylinders drive the rocking arm and loader drum assemblies.

Ammunition is manually loaded into the revolving magazine, which holds 70 rounds. The ammunition is held vertically in two concentric circles of stowage cells; each circle holds 35 rounds. The revolving magazine turns when the hydraulic motor rotates the screw feeder.

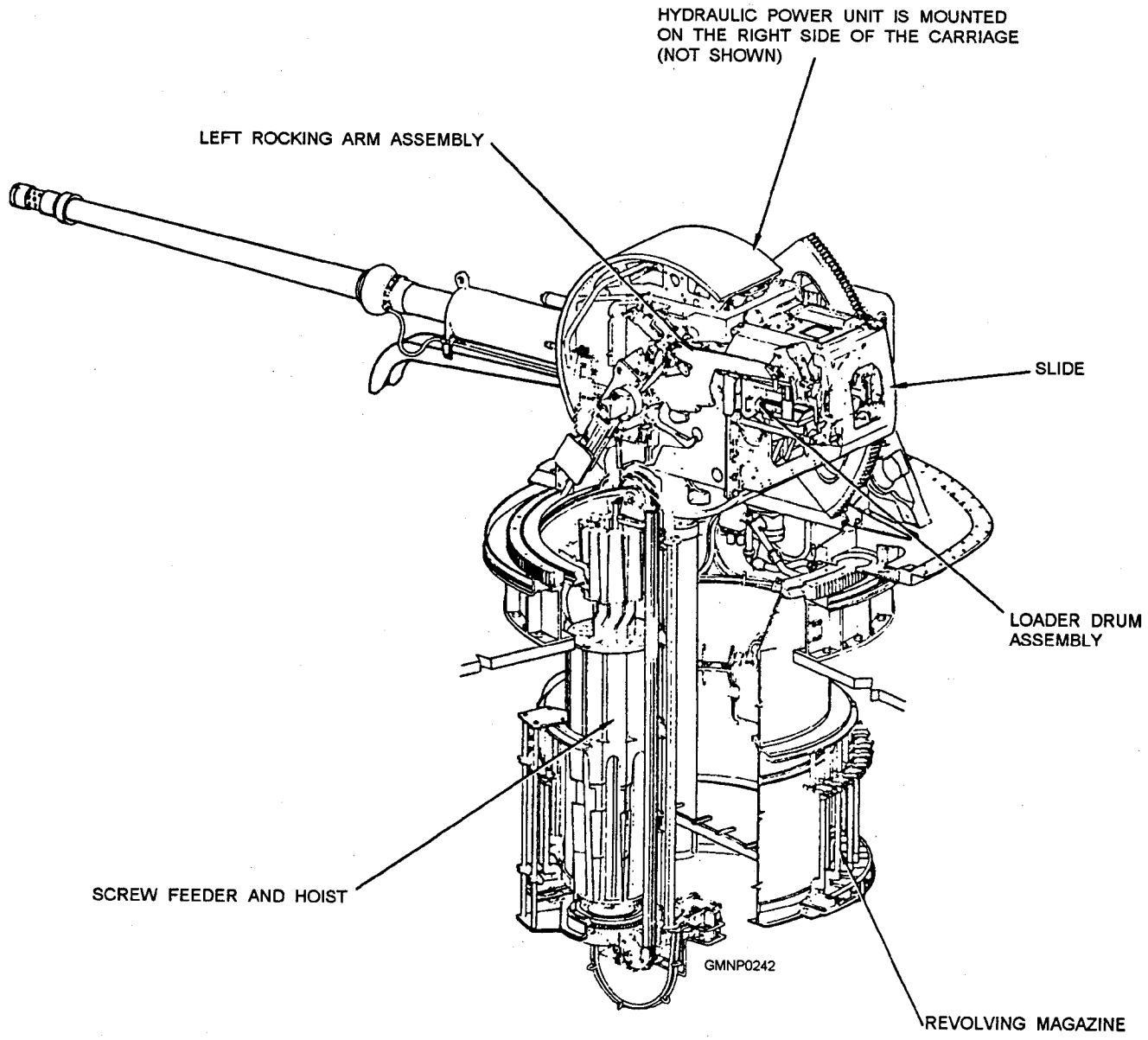

Figure 4-50.—Ammunition-handling system.

During rotation of the revolving magazine and screw feeder (fig. 4-51), around moves from the inner circle of stowage cells to the screw feeder. When a round leaves the inner circle of cells, around from the outer circle replaces it, leaving an empty stowage cell in the outer circle.

When a round reaches the screw feeder, it is lifted in a spiraling reamer by hoist lift pawl assemblies of the hoist as the screw feeder rotates (fig. 4-52). The screw feeder, with a capacity of six rounds, delivers a round to the rocking arms. The rocking arms alternately raise the rounds to the loader

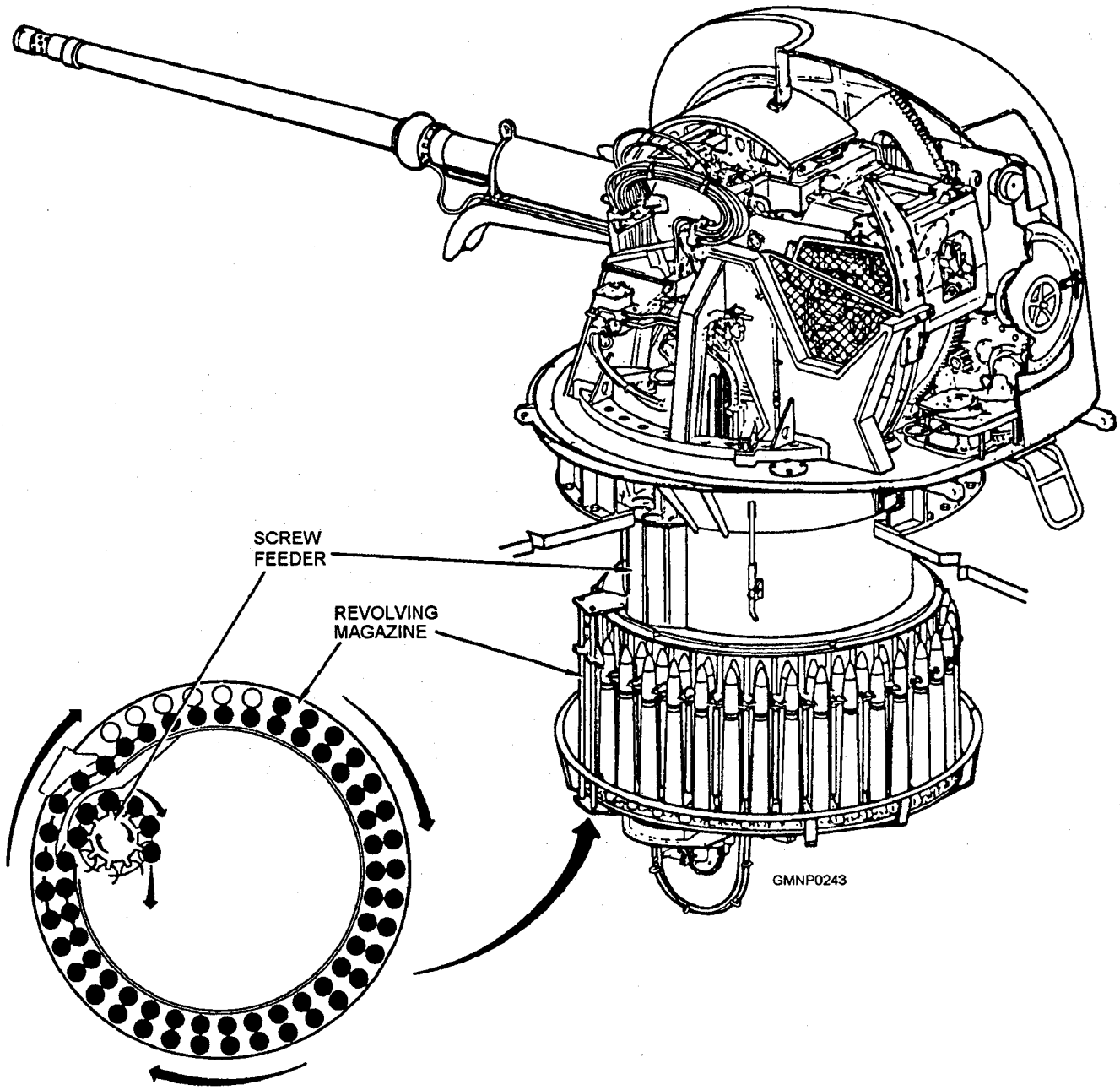

Figure 4-51.—Movement of rounds in revolving magazine.

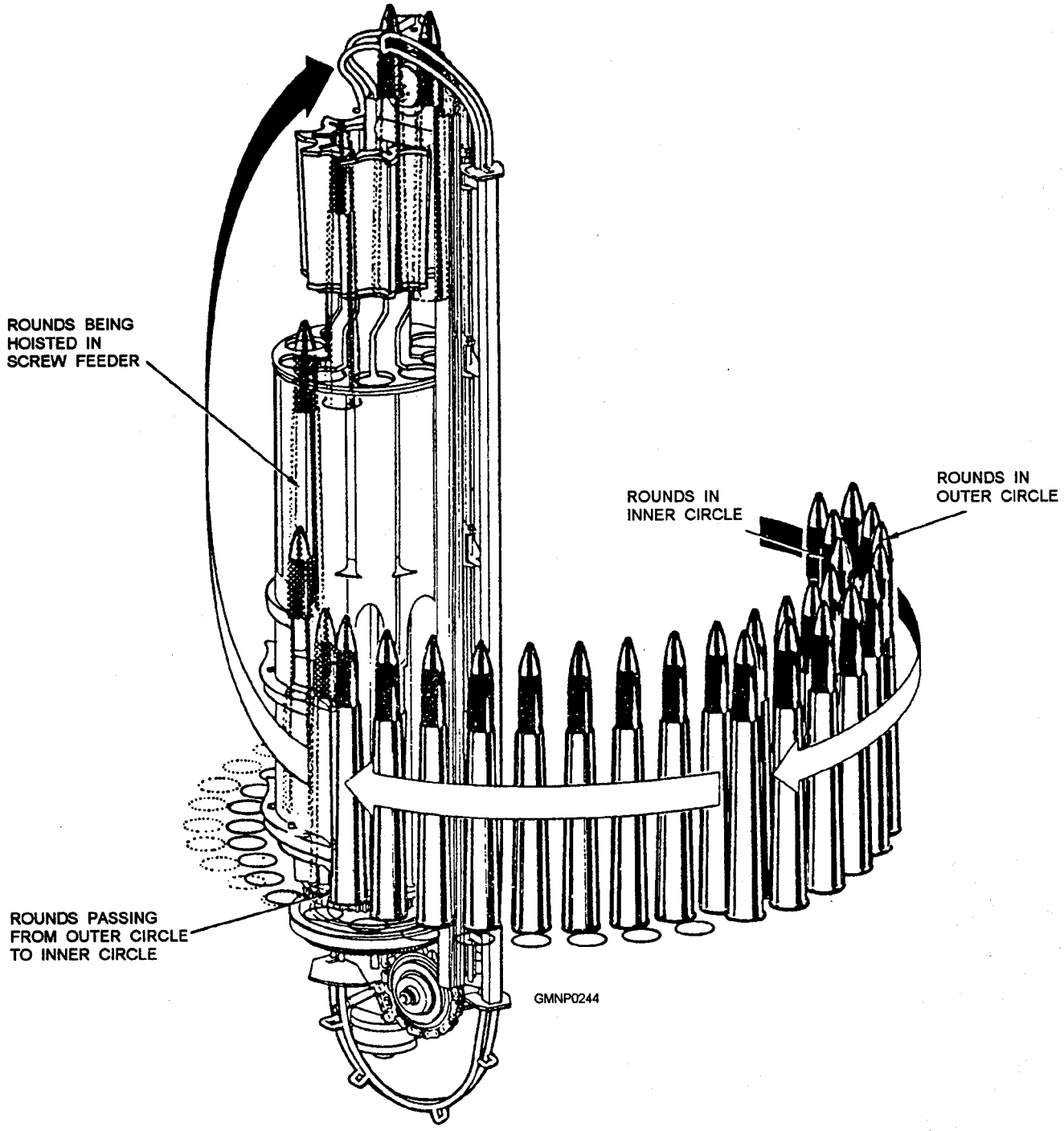

Figure 4-52.—Ammunition flow diagram.

drum (fig. 4-53). While one rocking arm is lifting a round to the loader drum, the other arm is returning empty to take the next round from the screw feeder.

The loader drum has a capacity of four rounds. As the loader drum receives around from the rocking arm, it rotates to deposit the round in the last station loader drum and then into the transfer tray for subsequent ramming and firing (fig. 4-54). The last station loader drum is the last station of the ammunition-handling system; a round at this station can advance to the

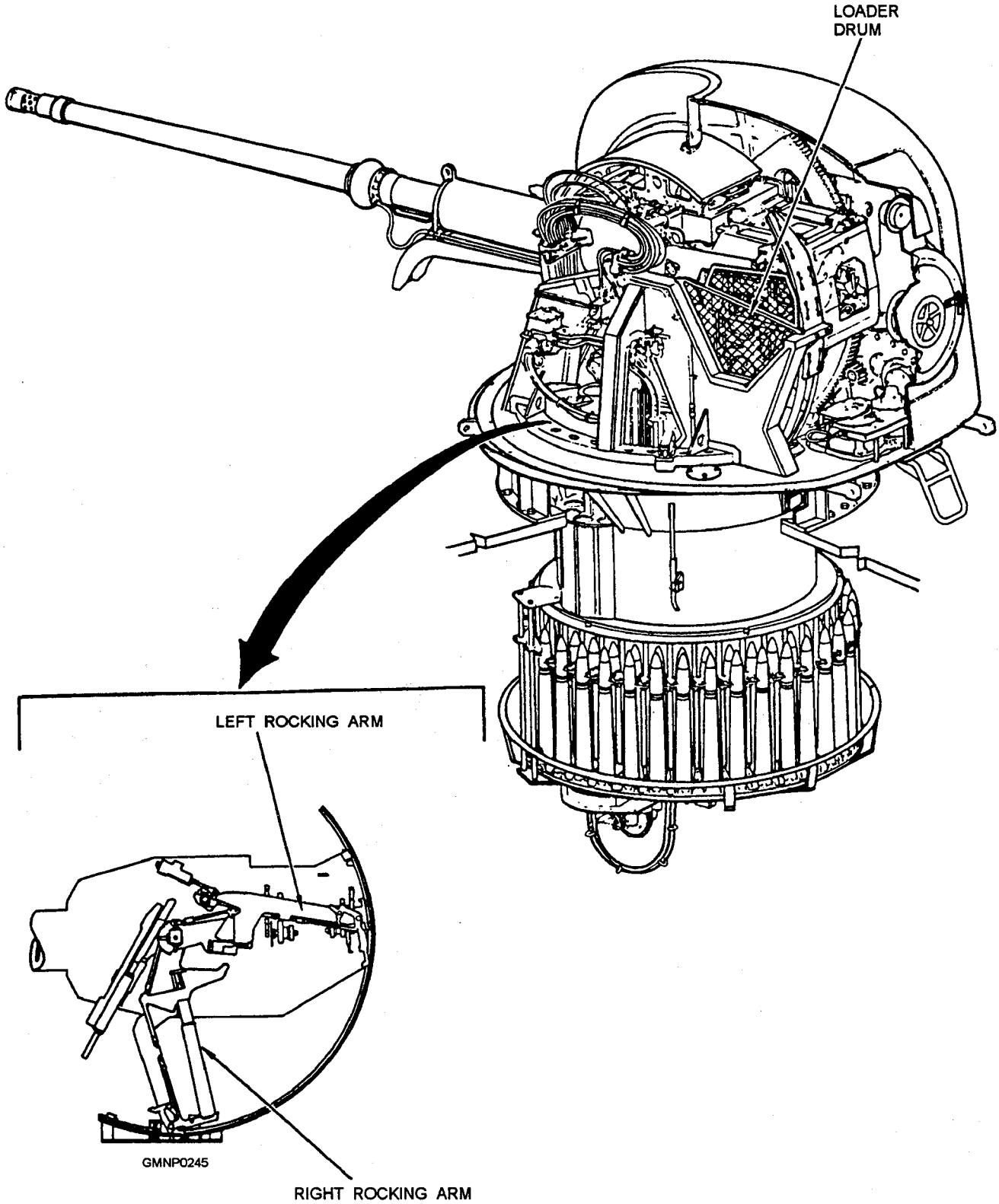

Figure 4-53.—Movement of rounds from screw feeder to loader drum.

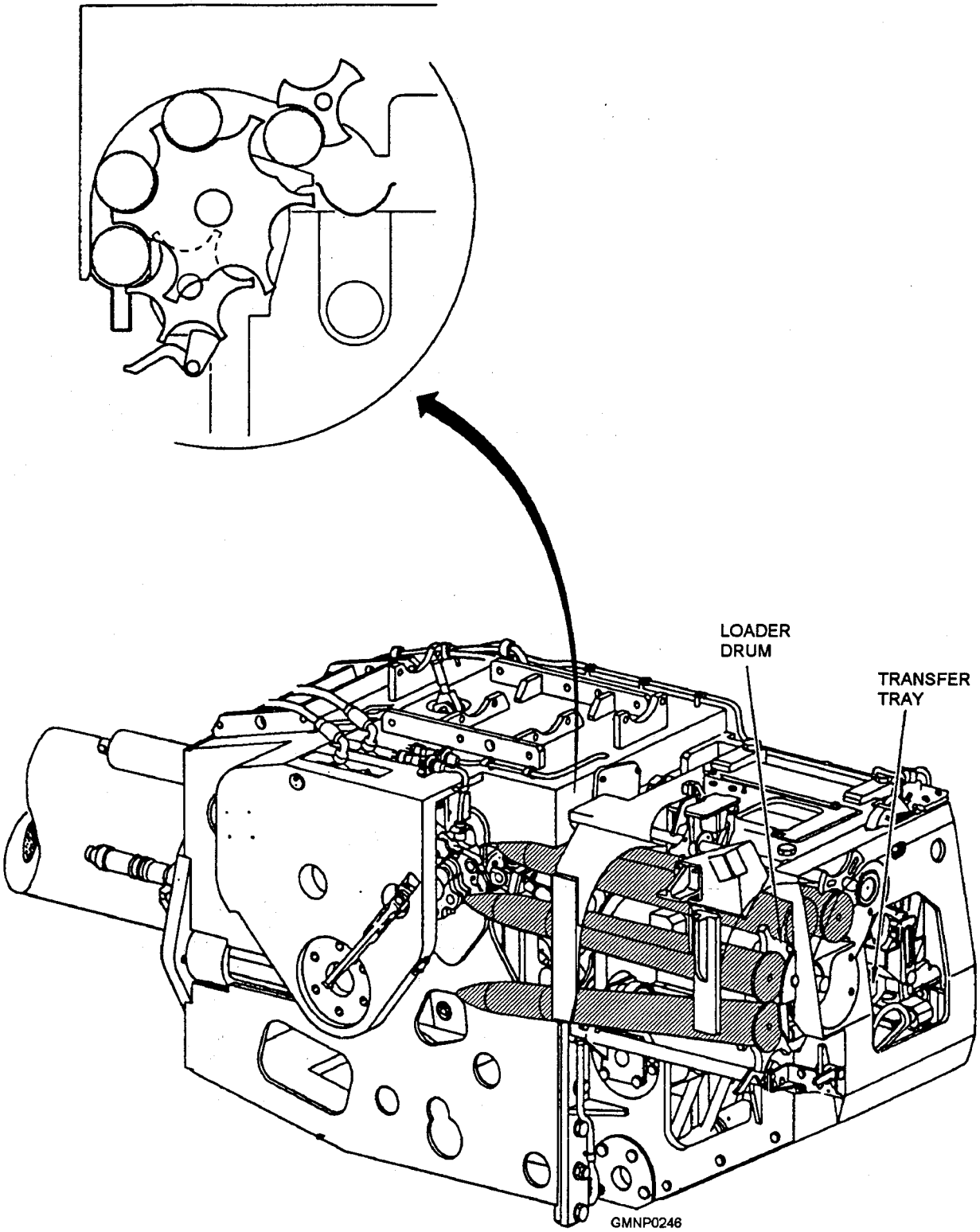

Figure 4-54.—Movement of rounds in loader drum.

transfer tray only when all conditions of the firing circuit are satisfied.

Upon completion of the firing circuit, the round in the last station loader drum is moved onto the transfer tray, rammed, and fired. At the same time, a rocking arm takes a round from the screw feeder to the loader drum. The screw feeder lifts around to replace the one removed by the rocking arm, and the revolving magazine delivers another round to the screw feeder.

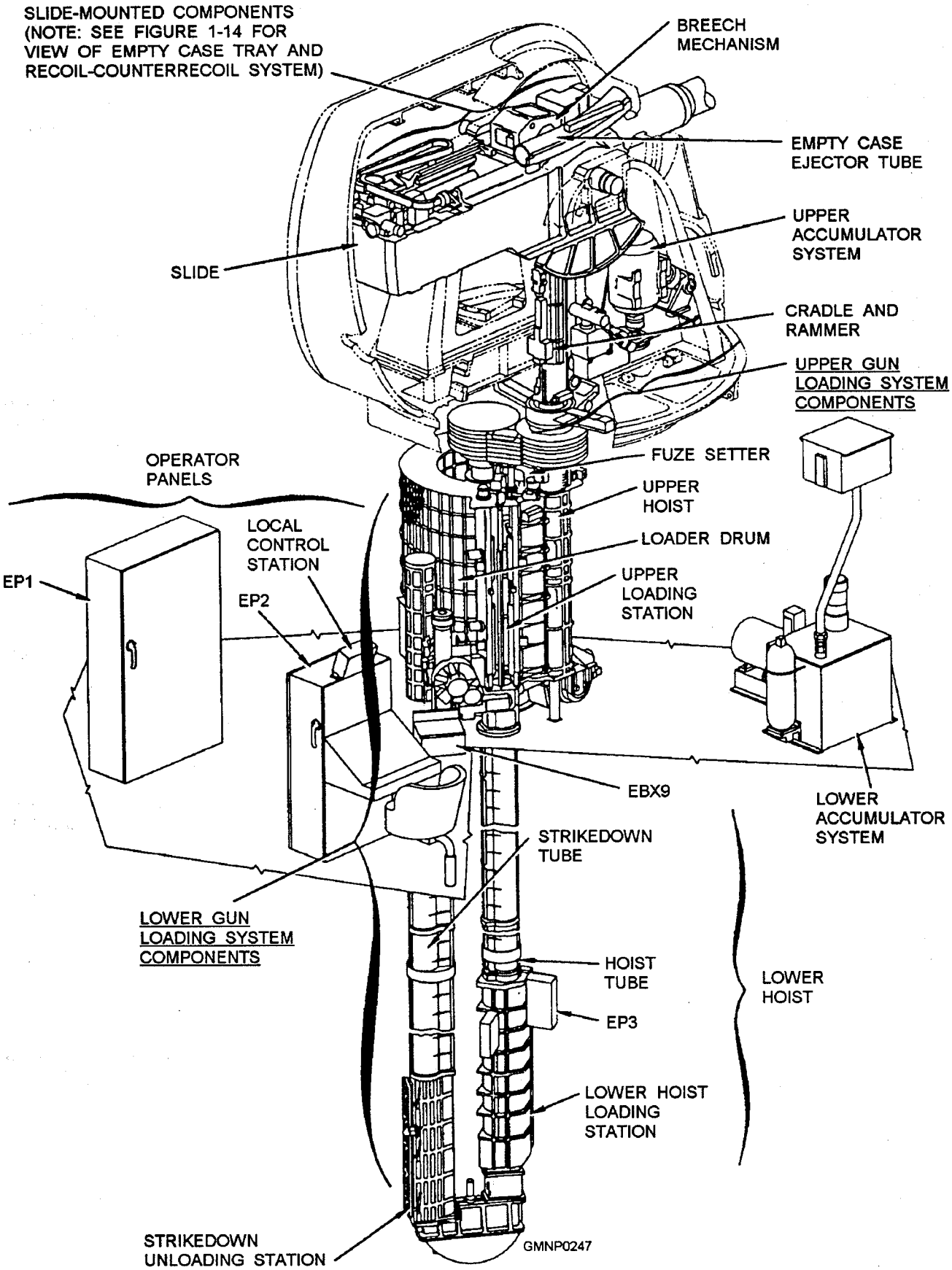

Figure 4-55.—Gun-loading system general components.

5-INCH 54-CALIBER GUN MOUNT MARK 45 HYDRAULIC SYSTEM

LEARNING OBJECTIVES: Describe the hydraulic system and components used in the Mk 45 gun mount. Explain the mechanics of pneumatic systems used in ordnance equipment.

The MK 45 hydraulic system is divided into two components: stationary and rotating (fig. 4-55). The stationary gun-loading system components are in the loader room and in the ammunition-handling room-a compartment one or more decks below the loader room. The stationary components are a loader drum, the fuze setter, a hydraulic power source (lower accumulator), and a lower hoist (if required). 'The rotating hydraulic components are a cradle and rammer, a breech mechanism, an empty case ejector, an empty case tray, recoil-counterrecoil system, some components of the slide, and a hydraulic power source (upper accumulator). The slide itself is primarily a supporting structure and a counterbalance for the gun barrel. .

LOWER ACCUMULATOR SYSTEM

The lower accumulator system (fig. 4-56), mounted in the loader room, provides the hydraulic power for operating the lower hoist, the loader drum, the fuze setter, and the upper hoist. The major components of the system include a main supply tank, a header tank, a main motor and pump, an exercise and emergency power drive, hydraulic controls, and an accumulator.

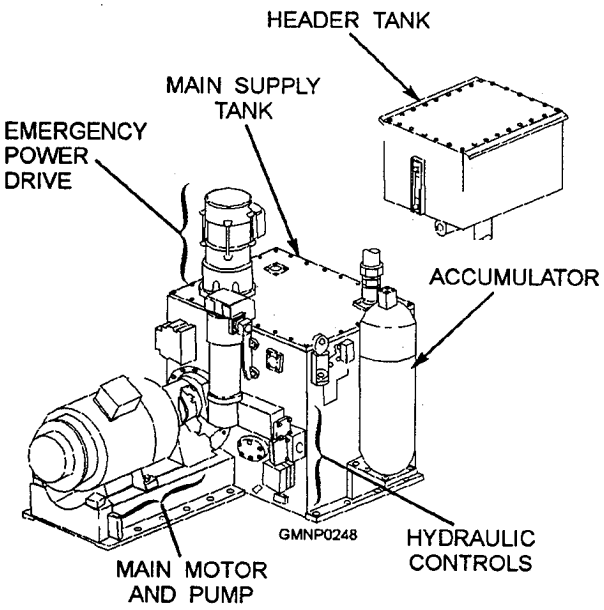

Figure 4-56.—Lower accumulator system.

Lower Hoist

The lower hoist (fig. 4-57) provides a means for ammunition handlers (members of the gun mount crew)

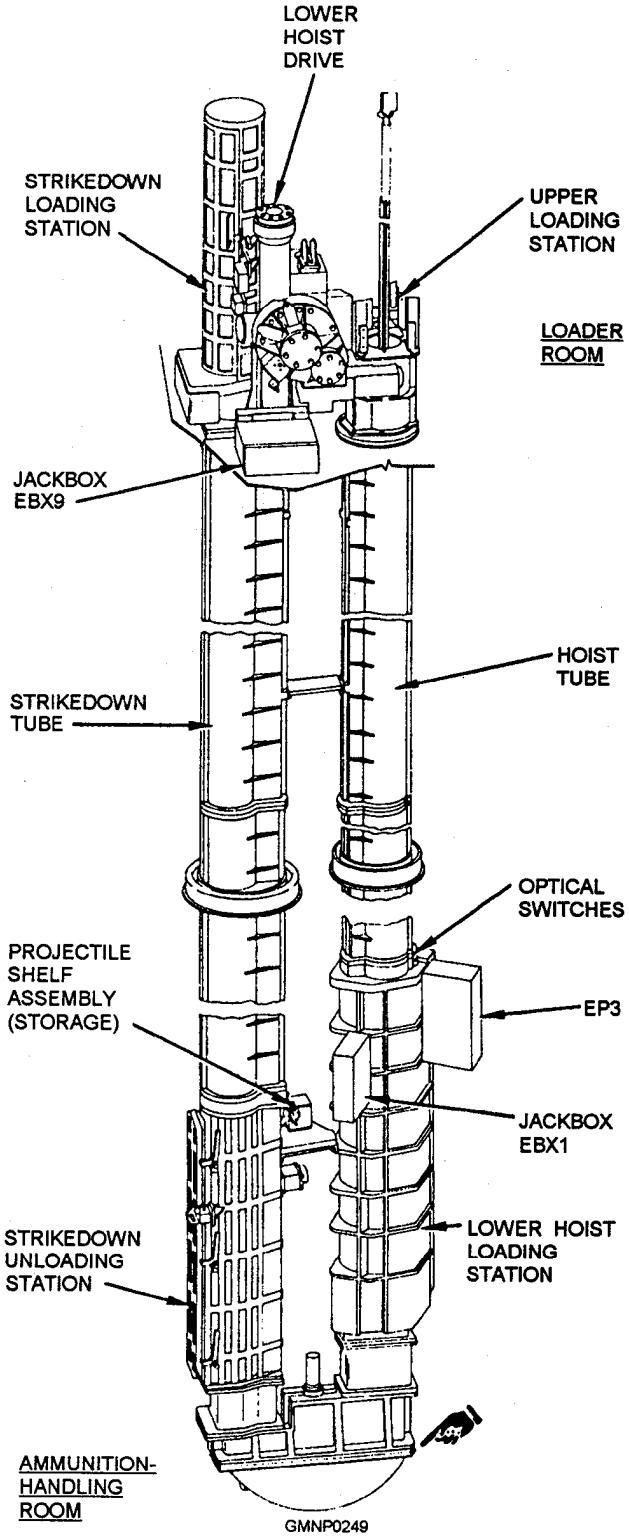

Figure 4-57.—Lower hoist.

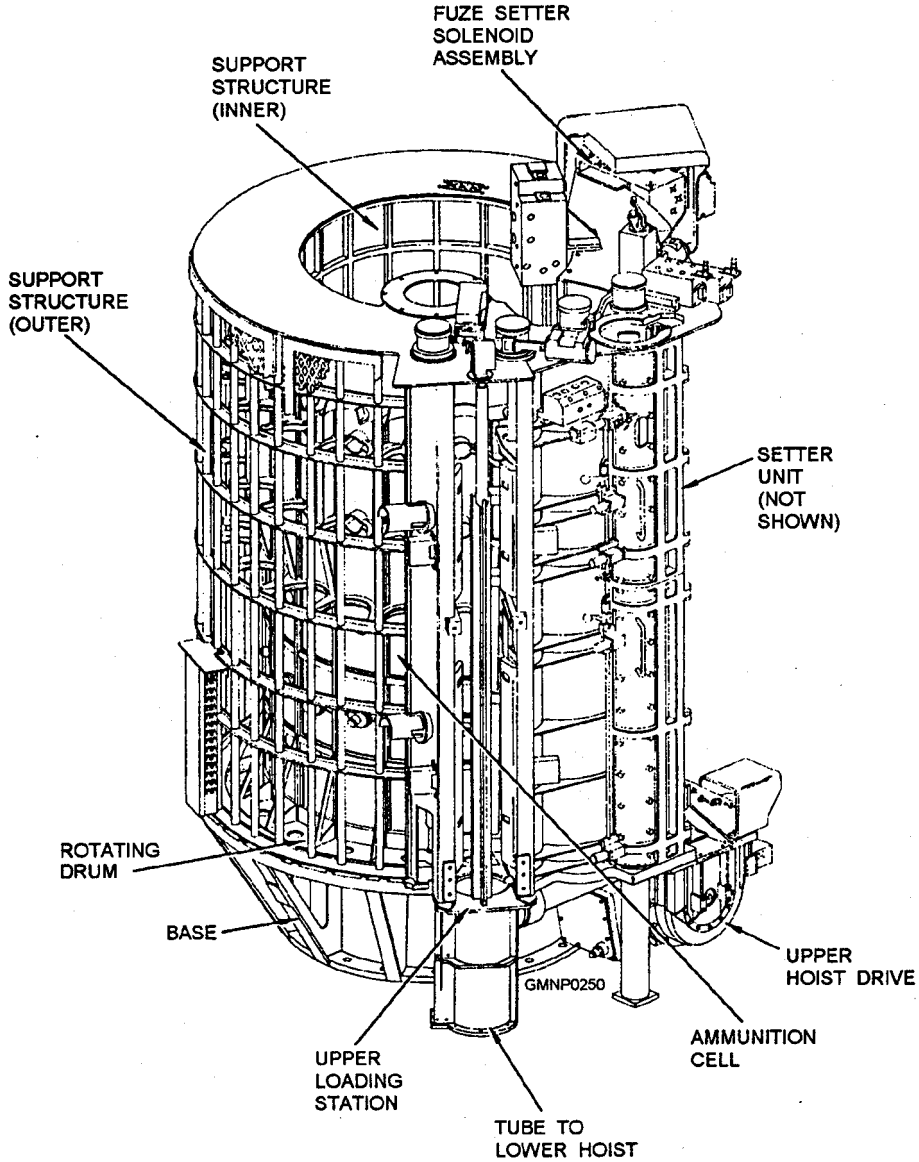

Figure 4-58.—Loader drum.

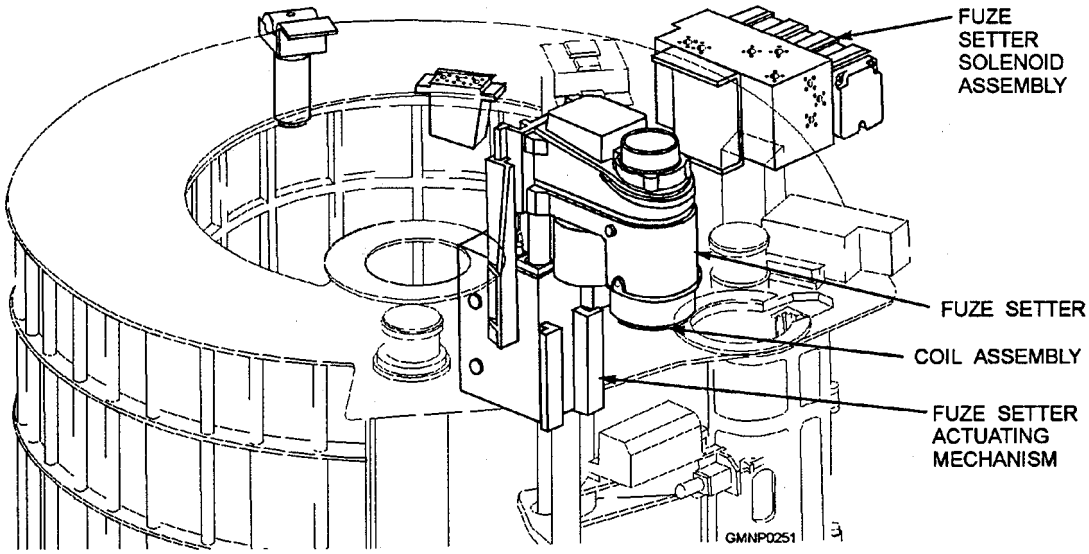

Figure 4-59.—Fuze setter.

to onload 5-inch 54-caliber ammunition into the loader drum from a remote station. It also provides a means for striking down ammunition into the ship's ammunition room.

Loader Drum

The loader drum (fig. 4-58) receives and stows ready service ammunition, positions the rounds for fuze setting, and ejects them-one by one—into the upper hoist. A rotating drum indexes as a unit within the cagelike support structure of the loader drum.

Fuze Setter

The fuze setter (fig. 4-59), an electrohydraulic device mounted atop the support structure for the loader drum, sets mechanical time (MT) or control variable time (CVT) fuzes on projectiles positioned for mechanical fuze setting in the transfer station. The coil assembly, at the base of the fuze setter, energizes to set the ESFs electronically (electronically settable fuzes).

Upper Hoist

The upper hoist (fig. 4-60) receives a round from the loaded drum and, in turn, transfers the round to the cradle for ramrning into the gun breech. Upon receiving around, the upper hoist raises it to the cradle, a pivoting tube attached to the rotating structure above deck. A pawl on the open-end chain within the upper hoist tube raises the round and then lowers it into position for the next load cycle. Also, the upper hoist can receive (unload) ammunition from the cradle. Ammunition handlers remove the round through a projectile unloading door and a powder case unloading door on The upper hoist. The lower accumulator system operates the raise cycle of the upper hoist. The upper accumulator system operates the lower cycle of the upper hoist. For example, if you have only the lower system lit off and raise the upper hoist, it will not lower until the upper system is energized.

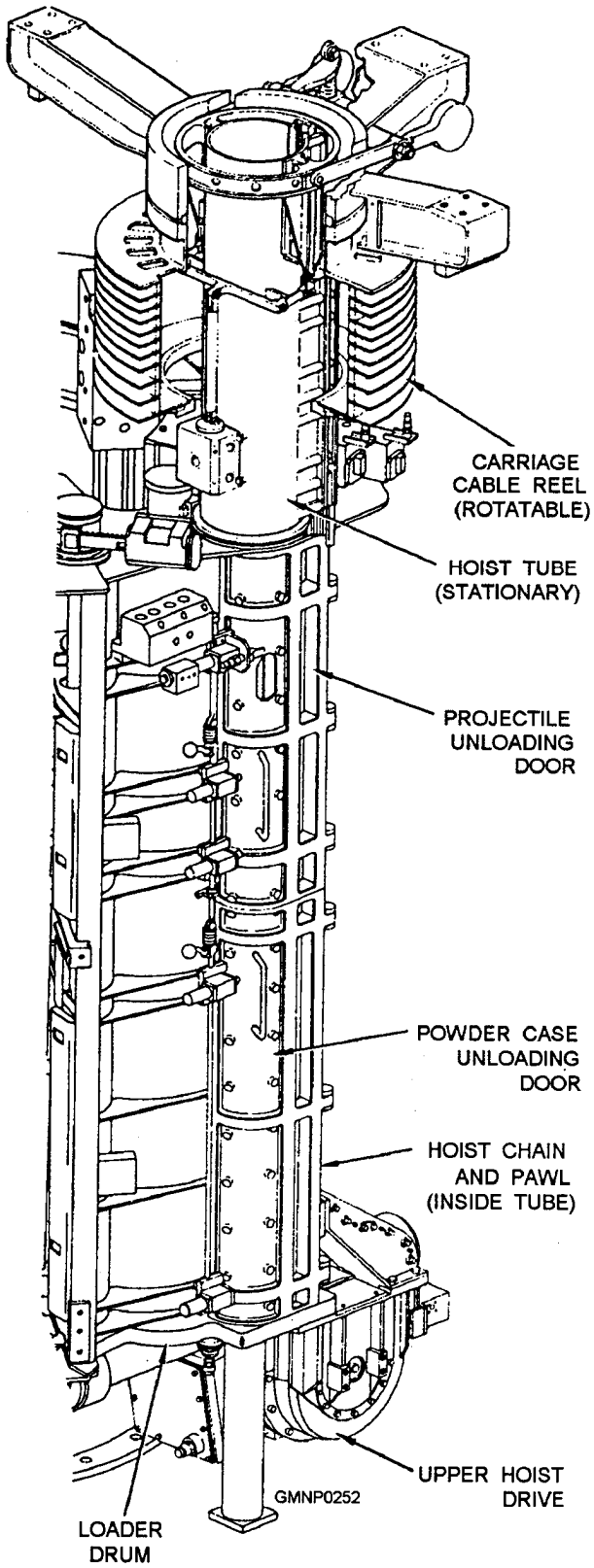

Figure 4-60.—Upper hoist.

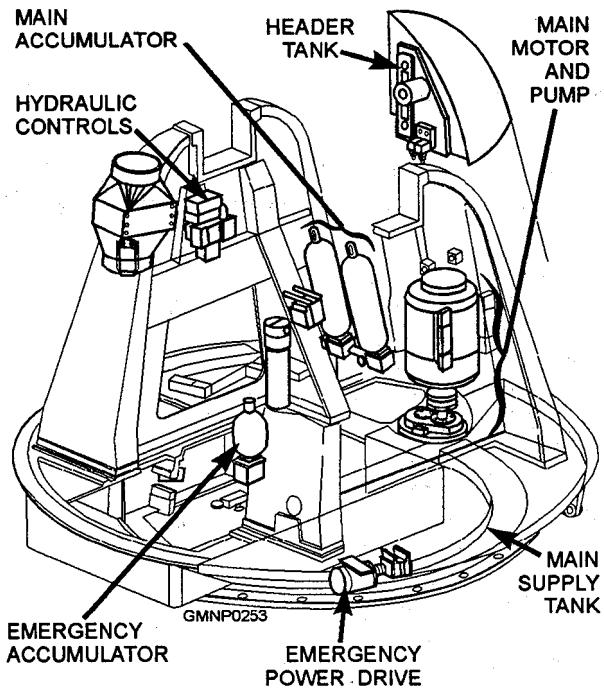

Figure 4-61.—Upper accumulator system.

UPPER ACCUMULATOR SYSTEM

The upper accumulator system (fig. 4-61), mounted on the carriage, provides the hydraulic power for operating the gun-loading components on the rotating structure: the cradle, the rammer, the breech mechanism, two recoil pistons, the empty case tray, and the empty case ejector. The major components of the upper accumulator system include a main supply tank, a main motor and pump, an exercise and emergency power drive, hydraulic controls, a main accumulator, and an emergency accumulator. The main supply tank also stores hydraulic fluid for the train and elevation system.

Cradle

The cradle (fig. 4-62) is a pivoting tube that transfers ammunition between the upper hoist in the loader room and the slide in the rotating structure. When in the DOWN position, the cradle aligns with the upper hoist; when in the UP position, it aligns with the gun bore.

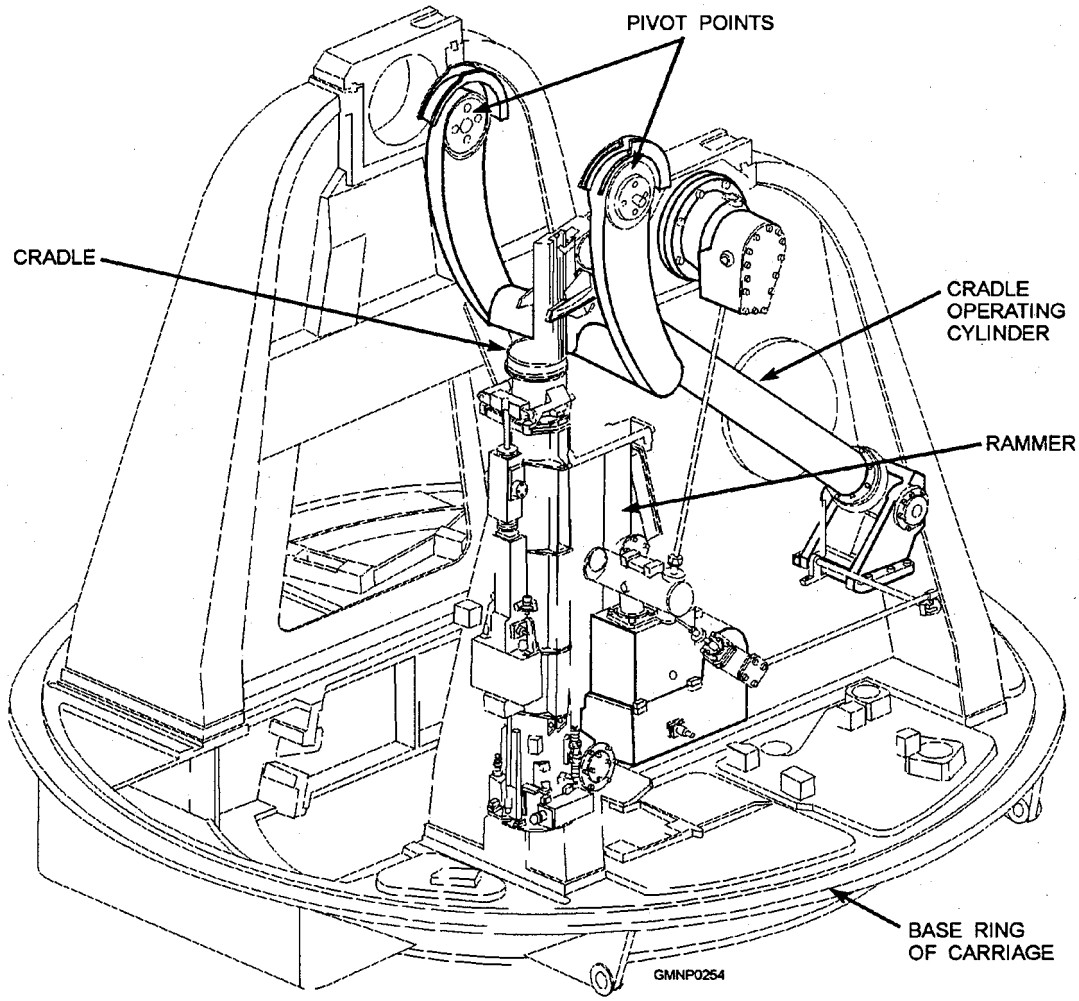

Figure 4-62.—Cradle and rammer.

Rammer

The rammer, a chain-operated pawl inside the cradle, rams the round into the breech when the cradle latches into alignment with the gun bore. The gun barrel housing is a mounting block for the gun barrel, the breeze mechinanism, and the two recoil pistons (or cylinders).

Breech Mechanism

The breech mechanism (fig. 4-63) opens and closes the breech, extracts spent powder cases or guided

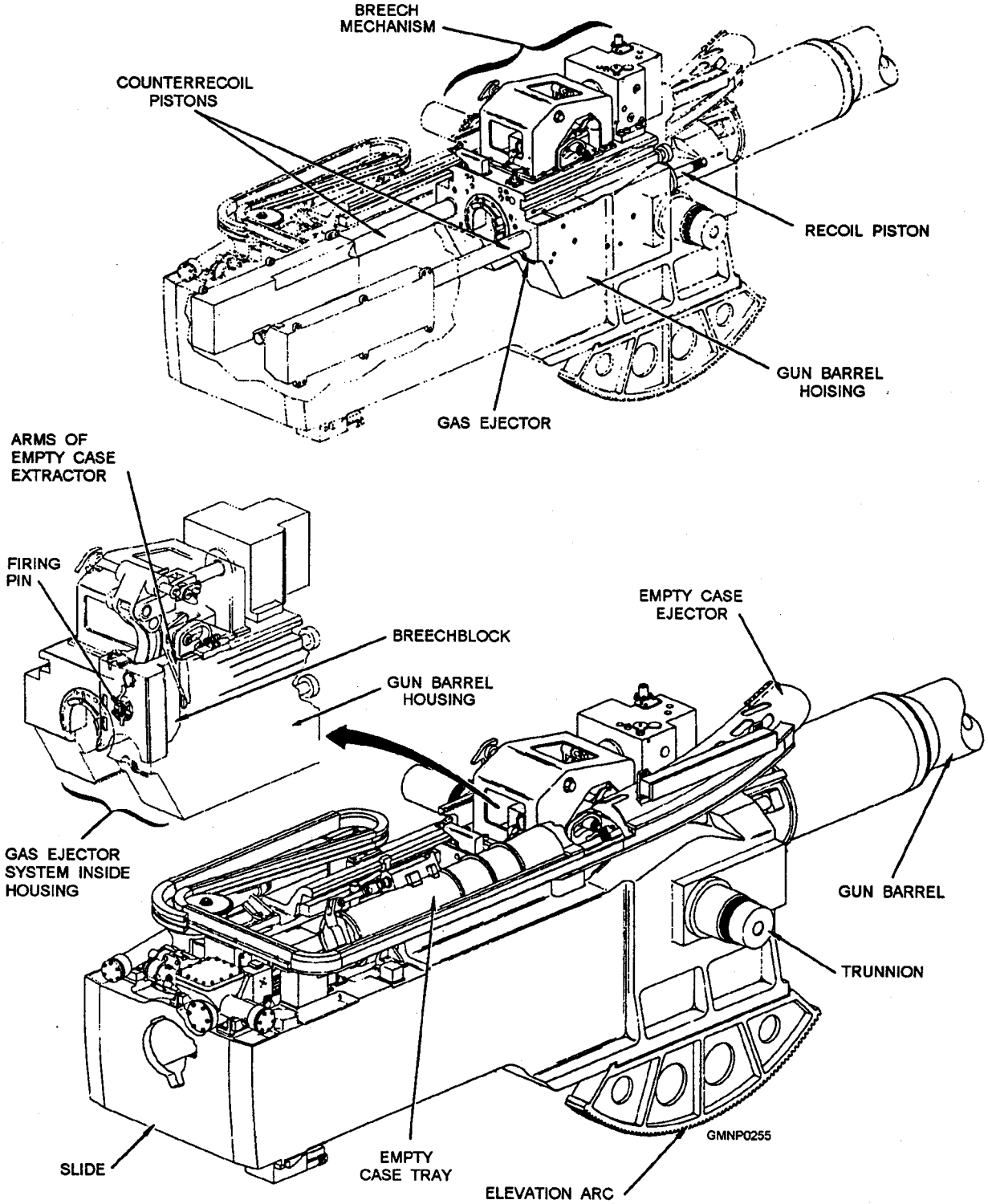

Figure 4-63.—Slide and slide-mounted components.

projectile (GP) shrouds from the breech, and ejects gas from the gun barrel. The main components are a breechblock, an empty case extractor, and a gas ejector.

General Operation

When the rammer transfers around from the cradle to the breech or completes the loading of a (GP) powder case behind a guided projectile (GP), the breechblock lowers to close the breech, to connect a firing cable, and to position a firing pin against the powder case primer.

When the round fires, recoil drives the gun barrel housing rearward, or out of battery position. The moving housing, which slides on horizontal keys in the slide, drives the recoil pistons against hydraulic fluid to absorb the shock and bring the recoil movement to a halt. Pressurized nitrogen then drives the counterrecoil pistons forward to put the gun barrel housing in battery position. The counterrecoil pistons also help buffer the shock of recoil.

Counterrecoil movement triggers the hydraulic actions that raise the breechblock. With the breechblock fully raised, two arms of the empty case extractor pull the spent case out of the breech and into the empty case tray. At the same time, the gas ejector releases pressurized air into the breech to clear the gun barrel of gases.

The empty case tray and the empty case ejector, mounted atop the slide, receive the spent powder case from the breech and eject it out of the gun shield and onto the weather deck. An ejector pawl moves the powder case from the empty case tray into an ejector tube, which leads to an opening in the gun shield.

The gun barrel, which consists of a tube and a liner, seats ammunition and, upon firing, imparts rotation to the projectile. Interrupted threads in the tube lock the barrel to the gun housing. Rifling in the liner imparts clockwise rotation to the projectile.

Hydraulic Control System

The servo and supercharge hydraulic system (fig. 4-64) provides pressurized fluid to control and replenish the power drives. The gear pump draws fluid from the main hydraulic tank and discharges the fluid through separate outlets. The fluid goes through filters, then on to an auxiliary relief valve block, which regulates the servo pressure to about 450 psi and the supercharge pressure to about 150 psi. This valve block also controls servo fluid to a solenoid-operated valve that sets and releases the power-off brakes.

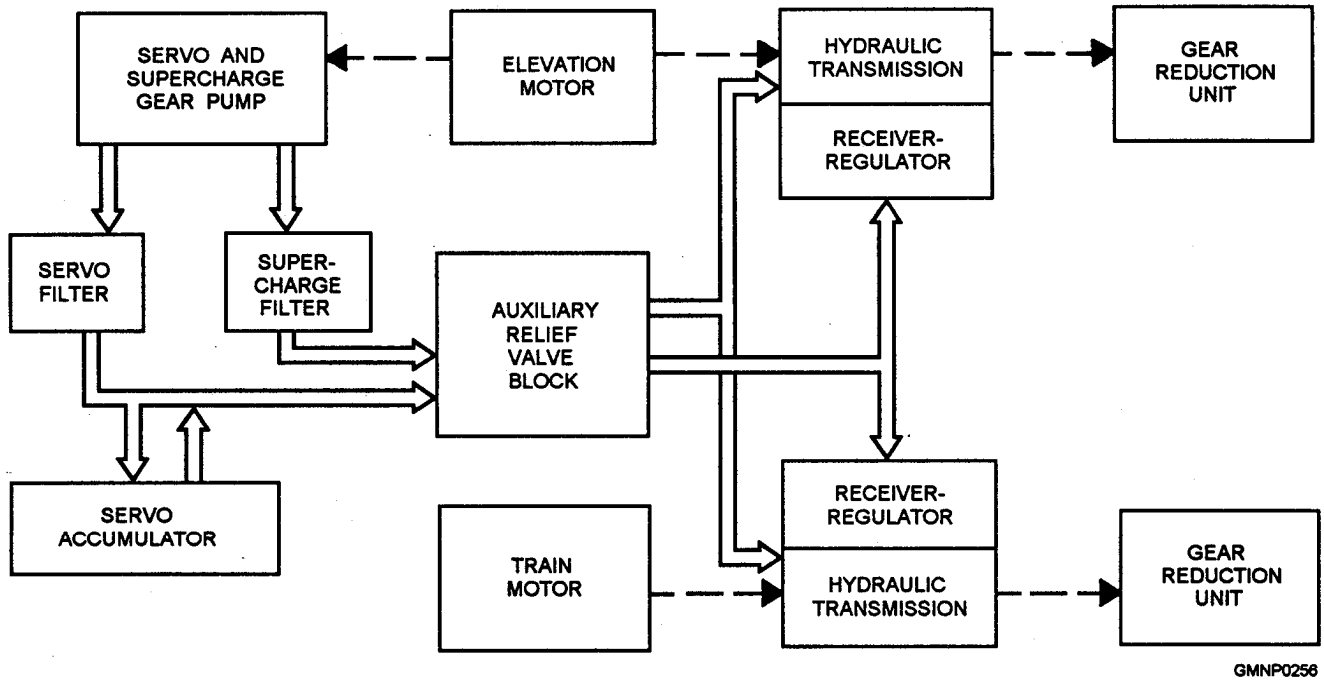

Figure 4-64.—Train/elevation hydraulic system; block diagram.

The supercharge fluid goes to the valve plate of the hydraulic transmission. A series of check valves ensure that the supercharge fluid is always available to replace slippage losses in the transmission.

The servo fluid, through the electrohydraulic transducer and servo valve, operates the stroking pistons of the A-end. The servo accumulator stores a small amount of fluid for periods of high demand. The accumulator also reduces pressure variations of the pump and pulsations of the relief valve.

For a more detailed description of the Mk 45 hydraulic system, refer to *Technical Manual for 5-Inch 54-Caliber Gun Mount Mark 45,* NAVSEA SW323-D1-MMO-010 series.

ACTUAL GMLS POWER DRIVES

LEARNING OBJECTIVE: Explain the operation of power drive systems in the various types of GMLSs.

Accumulator and CAB type of power drive systems provide a GMLS with all the hydraulic fluid forces needed to perform its functions. The primary difference between the two systems involves what their output does for the GMLS. Accumulator type of power drives produces a supply of hydraulic fluid under pressure to operate the general GMLS equipment. Electrically controlled solenoids direct this pressurized fluid to operate hydraulic cylinders, for example. CAB type of power drives produces a mechanical output that is used to position the launcher or operate a RSR and hoist. In response to electrical order signals, the control assembly governs the operation of the CAB unit.

We will now briefly examine the various power drives of the individual GMLSs. Although you will notice differences in design, physical appearances, operating fluid pressures, and so forth, the basic principles are similar.

MK 13 GMLS POWER DRIVES

The Mk 13 Mods 4 and 7 GMLSs have four hydraulic power drive units. Basically there are very few differences between the power drives of the various mods. Operating fluid pressures do vary and only average ranges will be noted.

The launcher guide power unit (LPU) is an accumulator type of power drive located in the base ring. It supplies PA to operate guide components and the blast door. A gear pump charges three accumulator flasks to develop an average operating pressure of between 1,500- to 1,600-psi PA.

The magazine RSR/hoist power drive is a Special K type of unit. One A-end drives the RSR B-end or the hoist B-end. The power drive also produces servo fluid and supercharge fluid pressures. Supercharge fluid pressures are between 100 and 150 psi. Servo fluid pressure is developed by charging an accumulator flask and is about 400 psi for all mods. This fluid is supplied to the components associated with RSR/hoist selection and drive operations. Equipments include the inner and outer RSR latches, the RSR positioner, the hoist chain shifter, and the inner and outer hoist retractable rails.

The train and elevation power drives are CAB type of units located in the upper part of the inner structure. The power drives are similar and function independently. Supercharge fluid pressure is about 150 psi for both train and elevation systems. Train servo fluid pressure is developed by a small accumulator and is about 525 psi for all mods. Elevation servo fluid pressure, also developed by an accumulator, averages around 440 psi.

MK 26 GMLS POWER DRIVES

The Mk 26 GMLS (all mods) has four primary power drive systems. Each power drive unit has a unique emergency drive capability. Also, we will encounter some different fluid pressure values. Because the Mk 26 GMLS power drives are somewhat different, especially in functional capabilities, we will present them separately.

Train Power Drive System

The train power drive system has only one purpose-to rotate the launcher in train. It is located under the launcher platform and above the ICS. One electric motor drives four pumps: (1) A-end, (2) lube pump, (3) supercharge pump, and (4) servo fluid pump.

The main unit is the integrated hydrostatic transmission and brake assembly (fig. 4-65). This assembly is an in-line or straight CAB unit and power-off brake mounted within one housing. Physically it is different; functionally it is the same as other GMLS CAB and power-off brake units. Study this figure and compare it with figures 4-28 and 4-35.

A small lube pump circulates a lubricating oil through the train reduction gear unit. The supercharge pump delivers fluid to a supercharge accumulator. Supercharge fluid pressure is developed to about 375 psi and replenishes lost fluid in the transmission unit. The servo pump delivers fluid to a servo accumulator. Servo fluid pressure is developed between 1,100 and

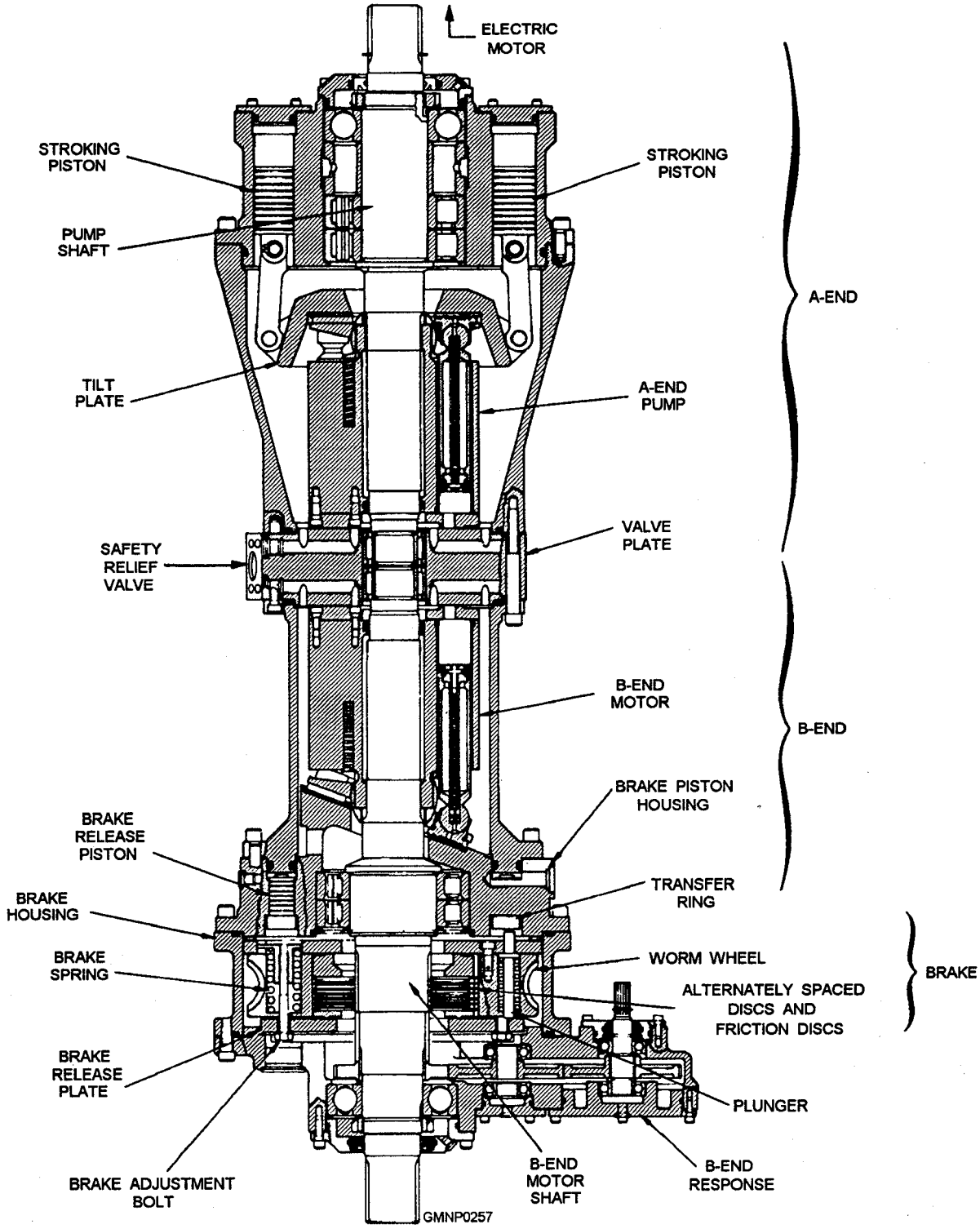

Figure 4-65.—MK 26 GMLS integrated hydrostatic transmission and brake assembly; typical for all main power drives.

1,400 psi. It is used to operate the train control assembly, positioner latch, and power-off brake.

Elevation Power Drive System

The elevation power drive system has two primary functions. Through its integrated hydrostatic transmission and brake assembly, it elevates and depresses the guide arms. Through its accumulator system, the elevation power drive supplies PA to operate the guide arm components. The elevation power drive is located within the launcher carriage. One electric motor drives three pumps: (1) A-end, (2) supercharge pump, and (3) guide arm PA pump.

The transmission unit and the supercharge pump function like those of the train power drive system. Elevation supercharge fluid pressure is only developed to about 150 psi, however.

The guide arm PA pump (gear type) delivers a volume of fluid to charge a piston type of accumulator (fig. 4-66). Guide arm PA is developed between 1,350 to 1,525 psi. A portion of this fluid is also ported to a pressure-reducing valve. This valve provides a 1,100-psi output which is used to charge a servo accumulator. Elevation servo fluid is derived from the guide arm PA. It is used to operate the elevation control assembly, position latch, and power-off brake.

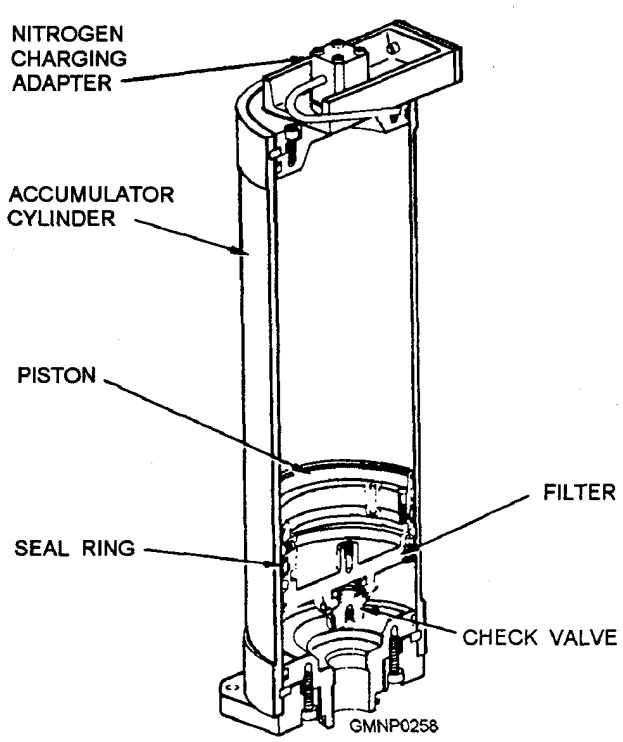

Figure 4-66.—Piston type of accumulator; typical.

If the elevation power drive system is running but in a standby or not operating condition, a guide arm PA accumulator solenoid will energize. The solenoid shifts a valve to block the output of the accumulator to the guide arms. (Servo fluid flow is not affected and remains available to the system.) This action prevents hydraulic slippage in the guide arm components and reduces the cycling rate of the accumulator. It also reduces heat buildup in the hydraulic fluid.

RSR/Hoist Power Drive System

The magazine hydraulic system consists of the A-side and B-side RSR/hoist power drive systems. They are identical units which are located within the six-missile sections and hoist ends of the RSR structures. The electric motor of each system (A and B) drives three pumps: (1) A-end, (2) case circulation pump, and (3) accumulator pump. We will only cover one side/system.

The integrated hydrostatic transmission and brake assembly responds to orders from the RSR/hoist control assembly. The B-end provides a mechanical output to the RSR/hoist shifter assembly. Through this unit, the RSR is indexed or the hoist is raised and lowered.

The case circulation gear pump supplies a low-volume, low-pressure circulating fluid to lubricate and cool the transmission unit.

The accumulator pump (gear type) supplies fluid to the RSR/hoist accumulator system. Part of the output of the pump charges the PA/servo piston type of accumulator flask. PA/servo is developed between 1,350 and 1,525 psi and is distributed throughout the magazine equipments. These equipments include the blast door, span rail, fin opener, RSR components, hoist components, and the strikedown system. It also operates the RSR/hoist control assembly and power-off brake.

The other portion of the output of the accumulator pump is applied to a pressure-reducing valve. This valve provides the hydraulic fluid that charges a supercharge accumulator flask. Supercharge fluid pressure is developed to about 400 psi and is supplied to the transmission unit.

Emergency Drives

Each of the four power drive systems has an emergency drive capability. A small hydraulic motor is mounted to the B-end of each transmission unit. Its output shaft is coupled to the power-off brake

(fig. 4-67). When the small emergency drive motor is activated, it mechanically drives through the brake and moves the equipment. The Mk 26 GMLS does not have a manual or pneumatic means to drive through its power-off brakes.

Exercise and Emergency Accumulator Type of Power Drives

The Mk 26 GMLS has three exercise and emergency accumulator type of power drive systems. They permit limited, but total, GMLS operation under the following conditions:

1. During maintenance procedures

2. While performing or completing necessary GMLS functions should one or more main power drive systems fail

3. For operating GMLS equipments at reduced rates and fluid pressures when purging air from hydraulic components during initial start-up or after corrective maintenance actions

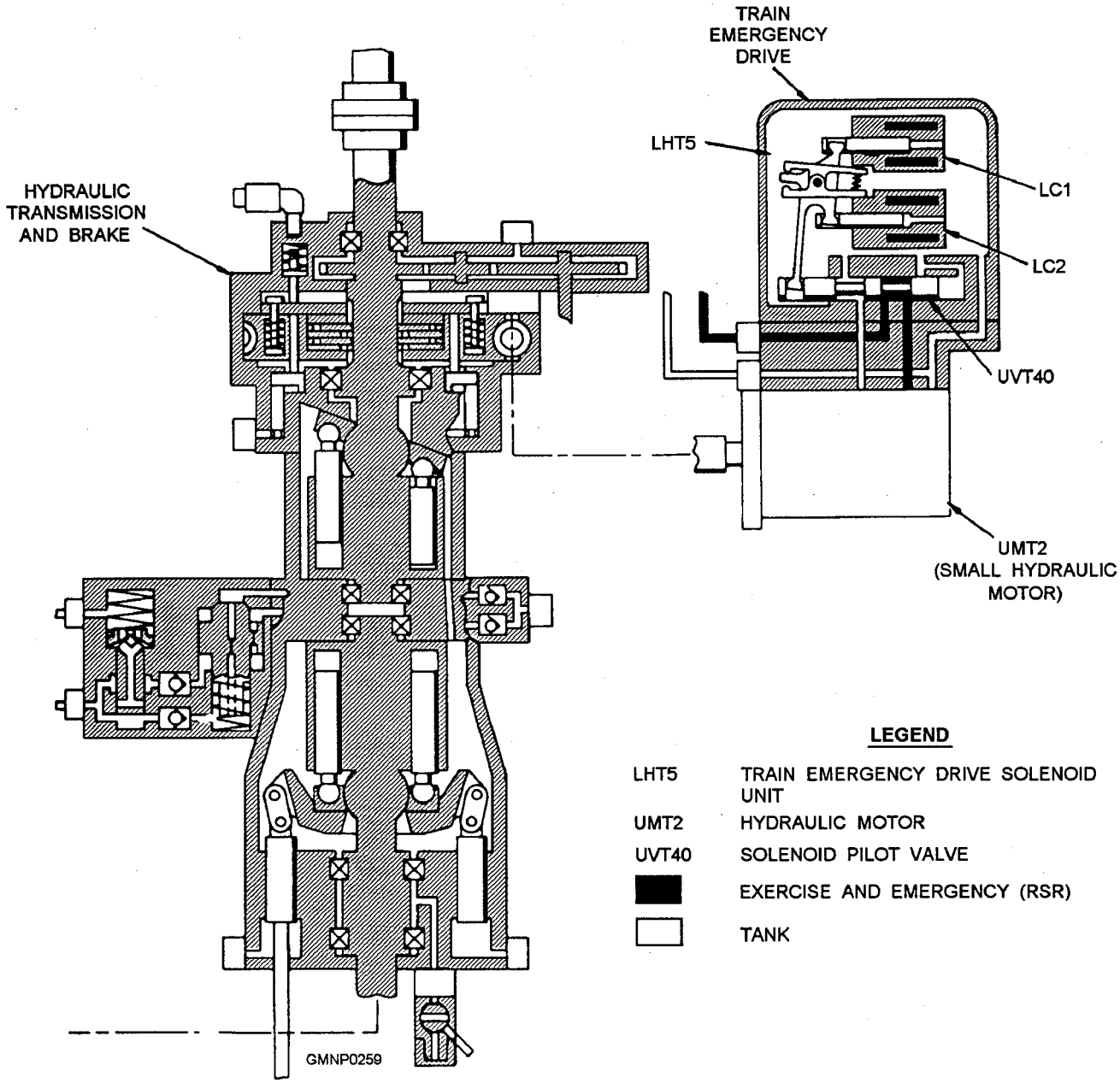

Figure 4-67.—Mk 26 GMLS emergency drive; typical arrangement for all power drives.

These exercise and emergency systems can be operated from any normal, alternate, or emergency 440-volt ac ship power source. Power selection is made at the PDC by the MCC operator. The major components of the exercise and emergency systems are hydraulically incorporated with components of the main power drive systems. However, no tactical operations can be performed using the exercise and emergency systems (i.e., firing a missile).

RSR/HOIST EXERCISE AND EMERGENCY ACCUMULATOR TYPE OF POWER DRIVE.— The A- and B-side RSR/hoist exercise and emergency power drives provide two alternate sources of hydraulic operating pressure. They can operate the RSRs, hoists, strikedown equipments, blast doors, and jettison devices. They also provide fluid to operate the A- or B-RSR/hoist emergency drive motors and the train emergency drive motor.

The components of an emergency power drive are shown in figure 4-68. A small electric motor drives a small gear pump located inside the main fluid supply tank for each RSR/hoist system. The output of the pump charges a small accumulator flask. Exercise and emergency fluid pressure is developed between 800 and 935 psi. The emergency fluid is then distributed to the appropriate components of the GMLS listed in the last paragraph.

Because of the small size and capacity of the components of the emergency system, the GMLS equipments operate' at greatly reduced rates of speed. Through the RSR/hoist emergency drive motor, the RSR can be indexed slowly in either direction. When selected, the hoist can be lowered with or without a missile. However, because of a weight factor, it can only be raised when it is empty.

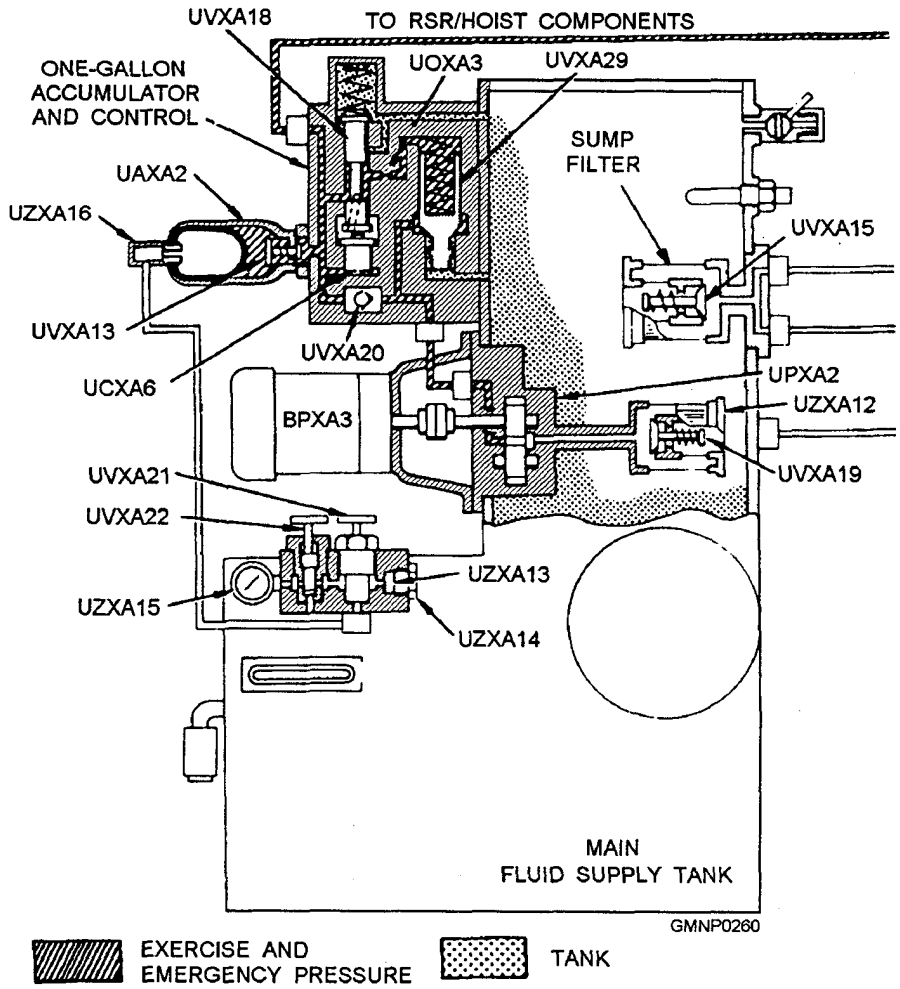

Figure 4-68.—RSR/hoist exercise and emergency accumulator system, power drive components.

A manual transfer valve assembly (fig. 4-69) is mounted to the bulkhead in the strikedown area. Two hand-operated levers control four directional valves. They route both PA and tank fluids from the RSR/hoist power drives. These fluids are directed to the strikedown mechanism and train emergency drive. These "fluids" may be from either the main accumulator systems or from the exercise and emergency accumulator systems. In the OFF position, the strikedown and train emergency drive equipments are isolated from any hydraulic fluid supply. When either lever is positioned to ON, operating fluid is ported to these equipments. Locking pins prevent both levers from being ON at the same time. In this manner, hydraulic fluids cannot intermix between the A- and B-side systems.

GUIDE ARM EXERCISE AND EMERGENCY ACCUMULATOR TYPE OF POWER DRIVE.— The third source of emergency hydraulic fluid is the guide arm exercise and emergency accumulator system. The components of this emergency system are physically and hydraulically part of the elevation power drive system. Reduced hydraulic fluid pressure is developed to about 815 to 935 psi. It is supplied to operate the guide arm components and the elevation emergency drive.

A manual shutoff valve assembly is mounted inside each guide arm structure. Each assembly consists of two rotary valves turned by a common operating lever (fig. 4-70). In the ON position, the valves port PA and tank fluids between the guide arm components and the hydraulic supply. These fluids can also be from the main elevation accumulator system or the guide arm exercise and emergency accumulator system. During maintenance operations or in case of a failure in one or more of the components of the guide arm, the valve may be turned to OFF. Isolating the "bad arm ensures sufficient operating pressures are still available to the other arm.

SAFETY

LEARNING OBJECTIVE: Identify safety procedures that should be used while working on power drive systems in GMLSs.

Safety is everybody's job. Awareness of danger, knowledge of how to avoid it, and constant vigilance are the three basic requirements for the prevention of accidents.

Safety is both a result and a reflection of good training. The crews of missile launching systems may be trained so that every man knows how to do his job thoroughly. However, the crew still cannot be considered well trained unless every man is safety conscious. Safe working habits must be impressed upon every crewman through proper instructions, constant drills, and continuous supervision. Carelessness, cockiness, and lack of training have led to disaster while working with all types of ordnance equipment and material.

Each piece of ordnance equipment has a specific list of safety precautions to be observed during operation and/or maintenance. Consult the safety summary of the equipment OP. Study it thoroughly before attempting to operate or repair any piece of equipment with which you are not familiar.

Any high-pressure system, hydraulic or pneumatic, is dangerous and may cause serious or fatal injuries when improperly handled. Exercise great care when operating any GMLS equipment.

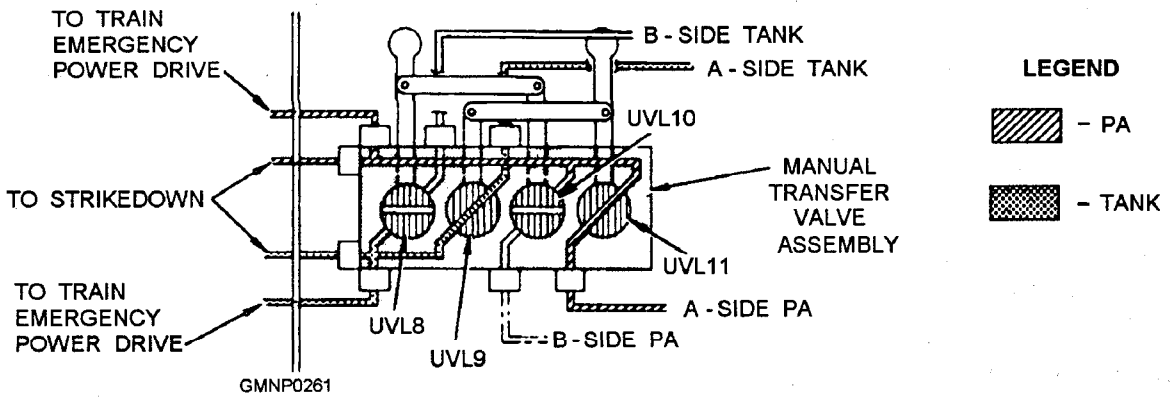

Figure 4-69.—Manual transfer valve assembly; in strikedown area.

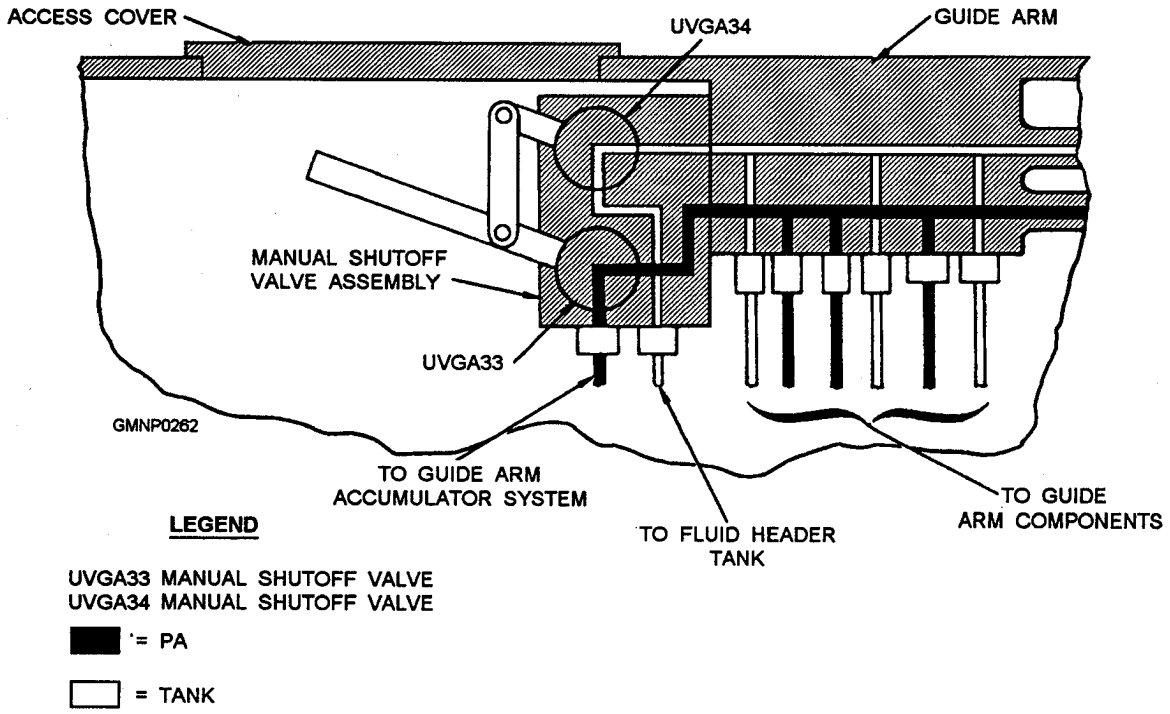

Figure 4-70.—Manual shut off valve assembly; in each guide arm.

HIGH-PRESSURE SYSTEM SAFETY RULES

The following safety rules are but a few of the many that must be observed when operating or working on hydraulic or pneumatic systems:

All hydraulic and pneumatic equipment should be installed and operated in compliance with prescribed safety precautions.

Personnel should be thoroughly trained and properly checked out on any high-pressure system before being authorized to operate the system.

Do not mix air and hydraulic fluid in a pressurized system. An explosive mixture could result (commonly known as diesel-action).

Never use oil on gauges associated with pneumatic systems. Do not use an oil gauge on an air system. Keep gauges clean at all times. Check the accuracy of gauges frequently as prescribed with maintenance requirement schedules.

Light oils, benzene, or kerosene must never be used as a cleaning or lubricating agent in a high-pressure air system. These oils vaporize easily and form a highly explosive mixture with compressed air.

Do not close or open air or hydraulic valves rapidly unless authorized to do so.

Never manually actuate switches, solenoids, relays, or valves on pneumatic or hydraulic systems unless you are authorized and directed to perform these actions.

Ensure that all flexible hoses are rigidly secured to prevent them from flailing or whipping about if a connection breaks under pressure.

Inspect threads of air and hydraulic system couplings before mating. Make certain they are free of dirt, oil, and physical defects.

Adhere to test, inspection, and replacement schedules for flexible lines. Never use worn, damaged, or outdated materials.

Do not kink a high-pressure line or hose nor strike a fitting or air line that is under pressure.

Before applying air or hydraulic pressure to any connection, make sure that it is properly secured. Do not attempt to loosen or tighten any high-pressure connection while the system is under pressure.

Carefully bleed pressure from all lines before removing or loosening them. Never disconnect any pneumatic or hydraulic lines or equipment until the accumulators have been dumped to the tank and zero pressure has been verified in the system.

Immediately report any leak in an air or hydraulic system to the work center supervisor or person operating the equipment.

HYDRAULIC FLUID PRECAUTIONS

Most hydraulic fluids are flammable and can cause skin irritation if prolonged contact occurs. Change clothing immediately if drenched with hydraulic fluid and wash thoroughly.

Hydraulic fluid becomes a hazard if it is sprayed, heated to its flash point, or otherwise subjected to conditions that cause vaporization. Hydraulic fluid must never be stored in a missile stowage, testing, or maintenance area. Do not handle hydraulic fluid in the presence of electrical sparks or open flames. Hydraulic fluid should be kept in closed metal containers. Bulk supplies should be stored only in approved and authorized areas.

Spilled fluids make a surface slippery. Wipe up spilled or leaking fluid immediately. Oily rags and clothing should be stored in a closed metal container to avoid a potential fire hazard. They should be properly disposed of at the first opportunity.

PERSONNEL SAFETY PRECAUTIONS

When working with high-pressure equipments, you must wear approved safety glasses or face shields. Do not direct high-pressure air against the deck, workbench, or other equipments. Low-pressure air may be used for certain specified maintenance-related cleaning or drying tasks. Always obtain permission to use low-pressure air for these purposes. Never direct any pressurized air jet toward your (or a shipmate's) body.

During any GMLS equipment operation, keep all parts of the body clear of any component that moves as a result of pneumatic or hydraulic pressure.

Safety precautions must be observed and common sense used ALL THE TIME. Do not think that once you have learned all the applicable safety rules you can sit back and relax. Review them periodically, particularly for those jobs seldom performed. Try to improve upon any rules in effect. Safety is everyone's responsibility, not just those who drew up the regulations. Many accidents are caused by personnel who are so familiar with their jobs they think they can take shortcuts. Personnel who do not know the applicable safety precautions often are the cause of accidents. We also cannot forget the many tragic accidents caused by practical jokers. However, in the majority of instances, plain carelessness is the biggest threat, Stay alert!

AIR SYSTEMS

Most, if not all, ordnance systems use compressed air in one way or another. Though the compressed air supply system is not considered part of your ordnance equipment, it is a critical support element. In many cases, you may find that the lack of compressed air can stop the most carefully planned exercise. Many Gunners have learned the hard way—you need to check the availability of compressed air the day before an important exercise. It is extremely important that you know where your air comes from and who controls it.

The air supply system is operated and maintained by the ship's engineers. Air systems are classified by their operating pressures. In the ordnance world, we are concerned primarily with high-pressure (HP) air. We will briefly discuss the main applications of HP air in gun systems.

HP air plants and systems are generally designed to provide compressed air at a nominal operating pressure of 3,000 psi or 5,000 psi. They are installed when one of the ship's services requires a pressure in excess of 1,000 psi. They are also used when a ship's function requires a flow rate that cannot be readily supported by either a low-pressure or medium-pressure plant. HP compressed air plants support high flow demand systems by the addition of HP air storage flasks in the system. Once an adequate quantity of compressed air is stored in these flasks, the high flow rates and pressure demands can be supported by way of pressure reducing stations.

The primary use of HP air in a gun system is to operate the gas ejection system. The gas ejection system uses compressed air to evacuate gases and unburned solids from the bore after firing. Gas ejection is a high-flow system. The compressed air is pumped from the engineering space to a flask in the vicinity of the gun mount. The air is then routed through a reducer, where it is regulated to system pressure, then up to the gun where it is used.

SUMMARY

In this chapter, we have looked at some of the basic mechanical and hydraulic principles used in gun mount and GMLS equipment. We also discussed the Mk 75, Mk 45, Mk 13 and Mk 26 hydraulic systems-control equipment and HP air systems that support weapons

systems operation. Most gun mount and GMLSs casualties are mechanical or hydraulic malfunction, therefore, a thorough understanding of mechanics and hydraulics is essential for the GM rating. In the next chapter, we will discuss the control circuits that regulate the operation of these devices. In chapter 12, we will describe maintenance and repair procedures for mechanical and hydraulic equipment.

CHAPTER 5

ELECTRICAL AND ELECTRONIC CIRCUIT ANALYSIS

There are many electrical and electronic circuits used in ordnance equipment. These circuits perform such jobs as power supply, lighting, loading system control, train and elevation control, and overload protection. All electrical circuits are made up of basic electrical or electronic devices. These devices, individual y or working together, can delay, interrupt, isolate, or integrate electrical and electronic circuits, and prevent damage to equipment.

The purpose of this chapter is to provide functional information of how these devices are used to operate and control ordnance equipment. Portions of this chapter are based on foundational information contained in other training manuals. You are assumed to have a knowledge of the fundamental properties of electricity and how to operate a multimeter to read voltage, resistance, and amperes.

Before proceeding with this chapter, you should review the information in Navy Electricity and Electronics Training Series (NEETS), Modules 1,2,3, and 16, *Introduction to Matter Energy, and Direct Current,* NAVEDTRA 172-01-00-79; *Introduction to Alternating Current and Transformers,* NAVEDTRA 172-02-00-85; *Introduction to Circuit Protection, control, and measurement,* NAVEDTRA 172-03-00-85; and *Introduction to Test Equipment,* NAVEDTRA 172-16-00-84, respectivey.

First we will explain some of the more common electrical and electronic devices used in missile launcher and gun mount control circuits. Next we will describe the operation of the common types of control circuits and explain the procedures used to locate common failures within each circuit. We will then discuss the control system in the Mk 45, Mk 75 gun mounts and the Mk 13 Mod 4 GMLS. These control systems are similar to the Mk 26 GMLS, so the Mk 26 GMLS will not be discussed.

The final sections of this chapter are devoted to a discussion of ships power and distribution and the fundamentals of synchros and electrical safety. Safety precautions required for working with electrical and electronic equipment are provided throughout the chapter.

POWER SUPPLY AND CONTROL CIRCUIT COMPONENTS

LEARNING OBJECTIVE: Recall the electrical components used in a typical missile launcher/gun mount power supply and light-ing circuit, their function, and how they are tested.

All the mechanical, electrical, and hydraulic mechanisms in a modern gun mount/launcher are controlled by the action and interaction of the various devices of the control and power circuits. The control circuits regulate the application of power to motors and to solenoid-operated hydraulic valves. Operation of the gun mount/launcher is performed sequentially. Barring a malfunction, no action (hydraulic, mechanical, or electric) can occur out of sequence because of the interlocking action of switches, relays, and solid-state devices.

Power circuits are normally 440 VAC and are used to operate the electric motors that power the hydraulic pumps associated with the gun mount. Gun mount/launcher control circuit voltage can be ac and/or dc of any value up to approximately 30 VDC or 115 VAC. Control circuit voltage is normally supplied by gun mount/launcher transformers that step-down 440 volts ac.

CIRCUIT ELEMENTS

This portion of the chapter covers the more common electrical devices used in power and control circuits.

Indicator Lights

Indicator lights show the position of mount/ launcher components or the status of switches, solenoids, fuses, and control and power circuits.

Figure 5-1 shows a simplified circuit with a light (LI) that indicates when the motor is running. The letters *L* or LI are the reference designations for lights on the schematics for the older gun mounts; the new ordnance equipment uses the designation *DS*.

Fuses

The fuse is the simplest form of a circuit protective device. It consists of a metal alloy fusible element that melts at a predetermined value of current. Thus, if a circuit draws more current than the rated value of the fuse, the fuse opens (blows) and the circuit components are protected.

Fuses are rated according to the amount of current they can safely carry; this current is usually measured in amperes. The most common cause of fuse failure is an overloaded circuit. There are, however, other causes. Failure to set the fuse into its contacts properly can cause a fuse to open.

On schematics for older gun mounts and missile launchers, fuses are designated by the letters *F* or *FA* (fig. 5-1). On newer mounts and missile launchers, such as the 76-mm 62-caliber Mk 75 gun mount and the Mk 13 Mod 4 GMLS, fuses are designated *FE* on schematics.

Switches

A switch is a device used for making, breaking, or changing the connections in an electric circuit.

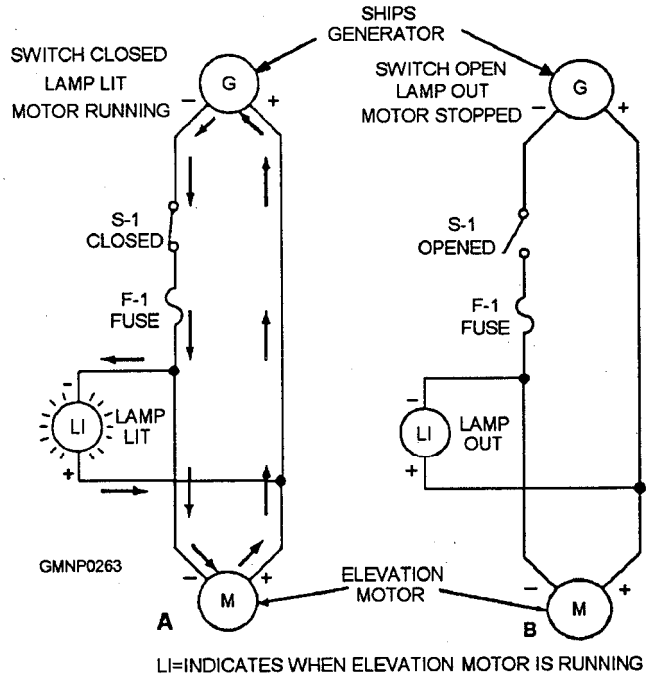

Figure 5-1.—Power-on indication circuit.

Switches are used extensively in gun mount/launcher control circuits to start and stop motors, to turn indicating lights on and off, to channel information from one point in the system to another, and to shift system mode of operation, to name but a few of their many uses.

An essential function of any switch is to maintain a good, low-resistance contact when the switch is closed. A poor connection between switch elements produces considerable resistance. This resistance results in overheating the contact area. When heavy current is being carried by the switch and the switch contacts are opened, an arc is produced. Therefore, switches should be opened and closed quickly to minimize arcing. Usually, they are designed to have snap action.

Switches are classified by the number of poles, by the throw, or by the number of positions. The pole of a switch is its movable blade or contactor. A switch may have one or several poles. The throw of a switch indicates the number of circuits each pole can complete through the switch. The number of positions a switch has is the number of places at which the operating device (toggle, shaft, plunger, and soon) will come to rest and, at the same time, open or close a circuit. As shown in figure 5-2, switches through which only one circuit can be completed are called single-pole, single throw switches. Switches with two poles, through each of which one circuit can be completed, are described as double-pole, single-throw switches, while those with two poles, through each of which two circuits can be completed, are described as double-pole, double-throw switches.

Switches are also classified by method of actuation (push button, toggle, and rotary) and by the trade name

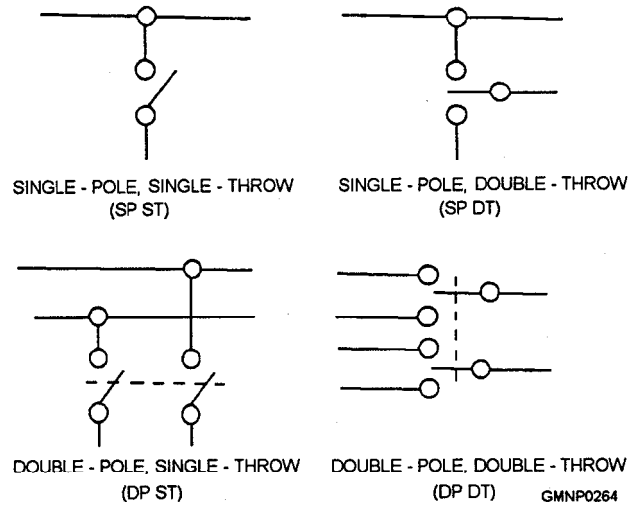

Figure 5-2.—Switch classification according to number of poles and throws.

of the manufacturer. An example of this type of classification is the microswitch.

ROTARY SWITCHES.— A rotary switch can take the place of several switches. As the knob or handle of a rotary switch is rotated, it opens one circuit and closes another. This action can be seen from an examination of figure 5-3. Most rotary switches have numerous layers called wafers or pancake sections. By adding wafers, the switch can be made to operate as a large number of switches. Rotary switches are used in gun mount equipment to select modes of operation and for many other functions.

J Rotary Switch.— The J rotary switch (fig. 5-3) consists of an equal number of rotors and pancake sections. The number of sections required in the switch is determined by the application. A shaft with an operating handle extends through the center of the rotors. The movable contacts are mounted on the rotors, and the stationary contacts are mounted on the pancake sections. Each section consists of eight stationary contacts, designated A through H, and a rotor with two insulated movable contacts spaced 180 degrees apart. Figure 5-4 shows the contact array for all pancake sections. Each movable contact is arranged to bridge two adjacent stationary contacts. The switch has eight positions. A detente mechanism properly aligns the contacts in each position of the operating handle. In one position, the rotor contacts bridge segments A-B and E-F; in the next position, the rotor contacts bridge segments B-C and F-G. Diagonally opposite pairs of contacts are subsequently bridged for the remaining positions. The various circuit leads are connected to the proper pancake terminals. To transfer circuits, you just turn the handle.

JR Rotary Switch.— The letters *JR* are the designation for a family of rotary switches. These switches (fig. 5-5), by a single motion, control a number

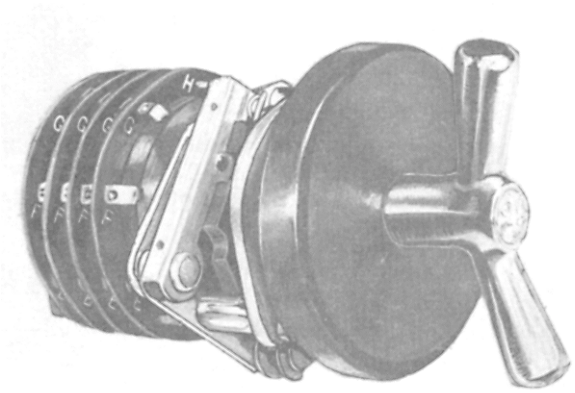

Figure 5-3.—The J multipole rotary switch.

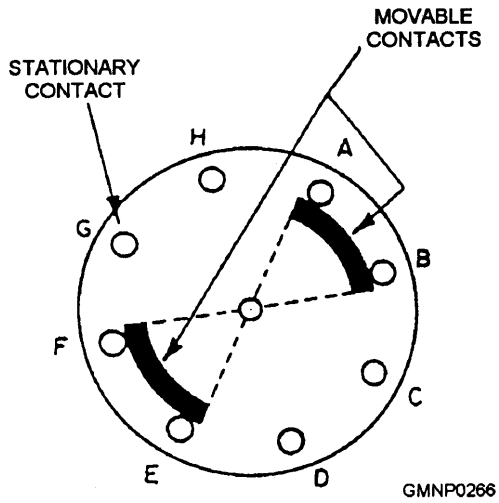

Figure 5-4.—The J switch contact arrangement.

of switches called pancakes or wafers located on the same shaft. To achieve this control, the switch is built in layers, or wafers, along the shaft of the switch handle (fig. 5-5, view A). The number of contacts determines the type of switching circuit. Usually all the wafers in the JR switches are identical; that is, they may be all make-before-break or break-before-make (fig. 5-5, view B). Each wafer is in itself a separate switch (fig. 5-5, view C).

Make-before-break means that as the switch is rotated the rotor contacts touch the next J pole before breaking the previous contact. Break-before-make means that as the, switch is rotated the rotor contacts leave the original pole before the movable contacts touch the new pole, In rare cases you may find a switch containing both types of switching arrangements. Extra wafers are provided for use as spares.

As the handle of the switch is turned, the rotor blades in all wafers turn simultaneously to make and break the circuits. A detente wheel is incorporated in each switch assembly to ensure proper positioning. Also, a stop plate (fig. 5-5, view A) limits the rotation of the switch by means of a stop pin. The pin is fixed in the stop plate to prevent overtravel.

The JR switch is smaller and more readily disassembled than the J switch. These two features save space and facilitate repairs. The JR switch is classified as a 1JR, 2JR, 3JR, or 4JR type.

- The **1JR** switch has only one movable contact per section. This movable contact bridges two adjacent stationary contacts.

- The **2JR** switch is the same electrically as the J switch and is the type used for general ordnance applications. The 2JR switch has two movable

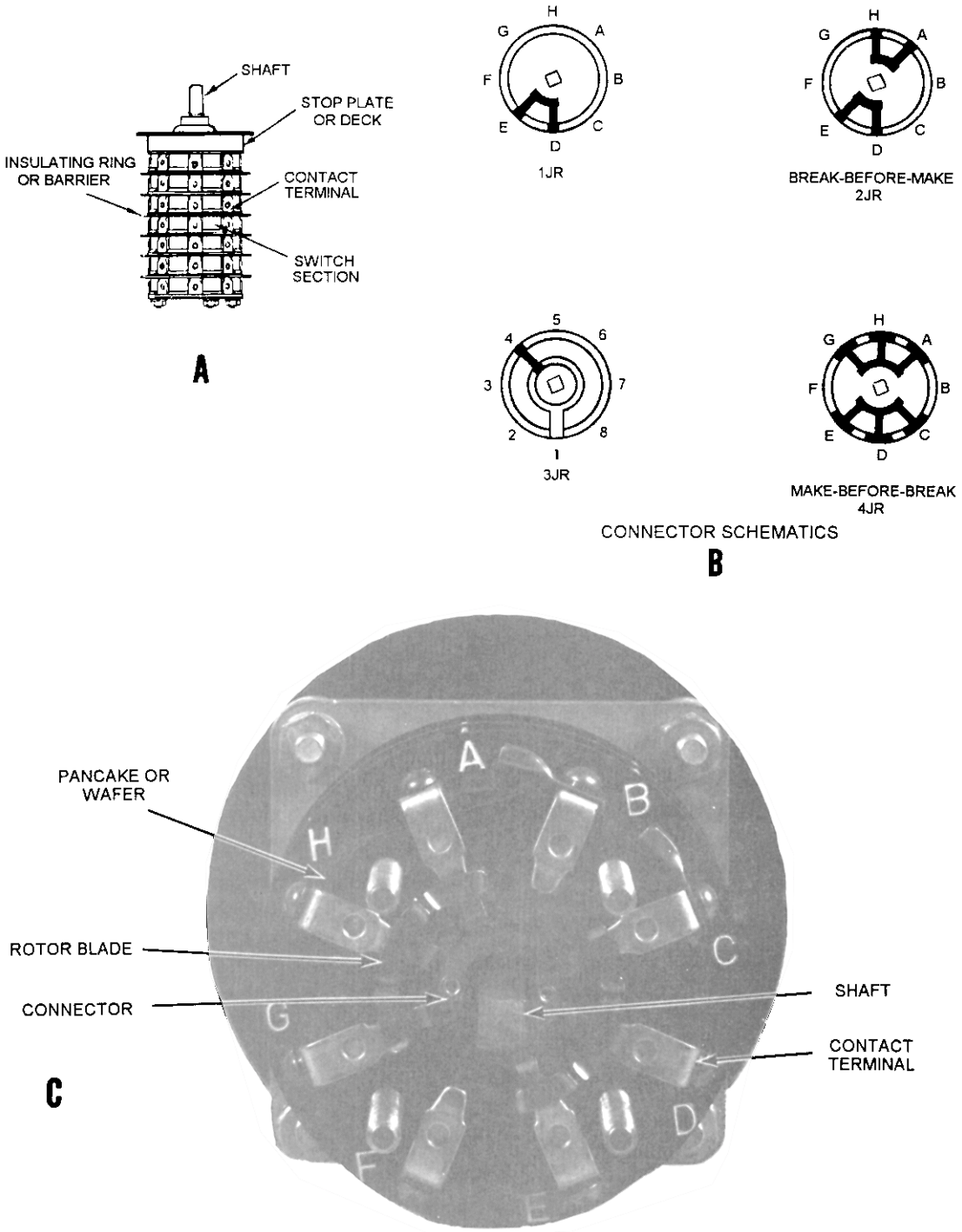

Figure 5-5.—JR rotary switch: A. Typical switch arrangement, schematic; B. JR switch contact arrangement; C. Face view.

contacts per section, 180 degrees apart. Each movable contact bridges two adjacent stationary contacts.

- The **3JR** switch uses one of the stationary contacts as a common terminal. This stationary contact is connected, in turn, to each of the other stationary contacts of the section by a single wiper contact. The 3JR is used for selecting one of several (up to seven) inputs.

- The **4JR** switch has two movable contacts in each wafer. The movable contacts bridge three adjacent stationary contacts.

The JR switch is stacked in multiples of five sections (up to 25 sections). In some cases, a switch

with a number of sections that are not a multiple of 5 has been installed. If this switch must be replaced, a switch with the next largest number of sections that is a multiple of 5 should be installed if space permits. All sections of a switch should be the same; but, if absolutely necessary, a switch with some sections of one type and some sections of another type can be provided.

The JR switches are rated at 115 volts, 60 Hz, and 10 amperes. The switch should not be used on dc circuits because of the possibility of severely burned contacts when operated slowly (teased).

Barriers are also provided between sections to prevent terminals from turning and shorting to adjacent terminals.

If the sections are not uniform, the switch will be designated JRSP, followed by the number of sections.

The stop deck on the JR switch (fig. 5-5, view A) permits setting the switch to the number of positions desired. By inserting pins or screws in the stop deck immediately after the desired last position, you can keep the switch from moving beyond that point.

INTERLOCK SWITCHES.— Interlock switches include a large group of switch types that are actuated manually, by mechanical linkage, or by hydraulic fluid. They act as control or protective devices and are used on all gun mounts and missile launchers.

Sensitive Switches.— The most common type of interlock switch is the sensitive switch. There are various kinds of sensitive switches with different means of actuation.

These are small, short-traveling, snap-action switches (fig. 5-6, view A). They are manufactured as normal] y open, normally closed, and double-throw. The latter has no OFF position. The microswitch is frequently used in referring to this type of switch.

Sensitive switches are usually of the push-button variety and are often used as interlock switches. These switches usually depend on one or more springs for their snap action. For example, the heart of the microswitch is a beryllium copper spring, heat-treated for long life and reliable action. The simplicity of the one-piece spring contributes to the long life and dependability of this switch.

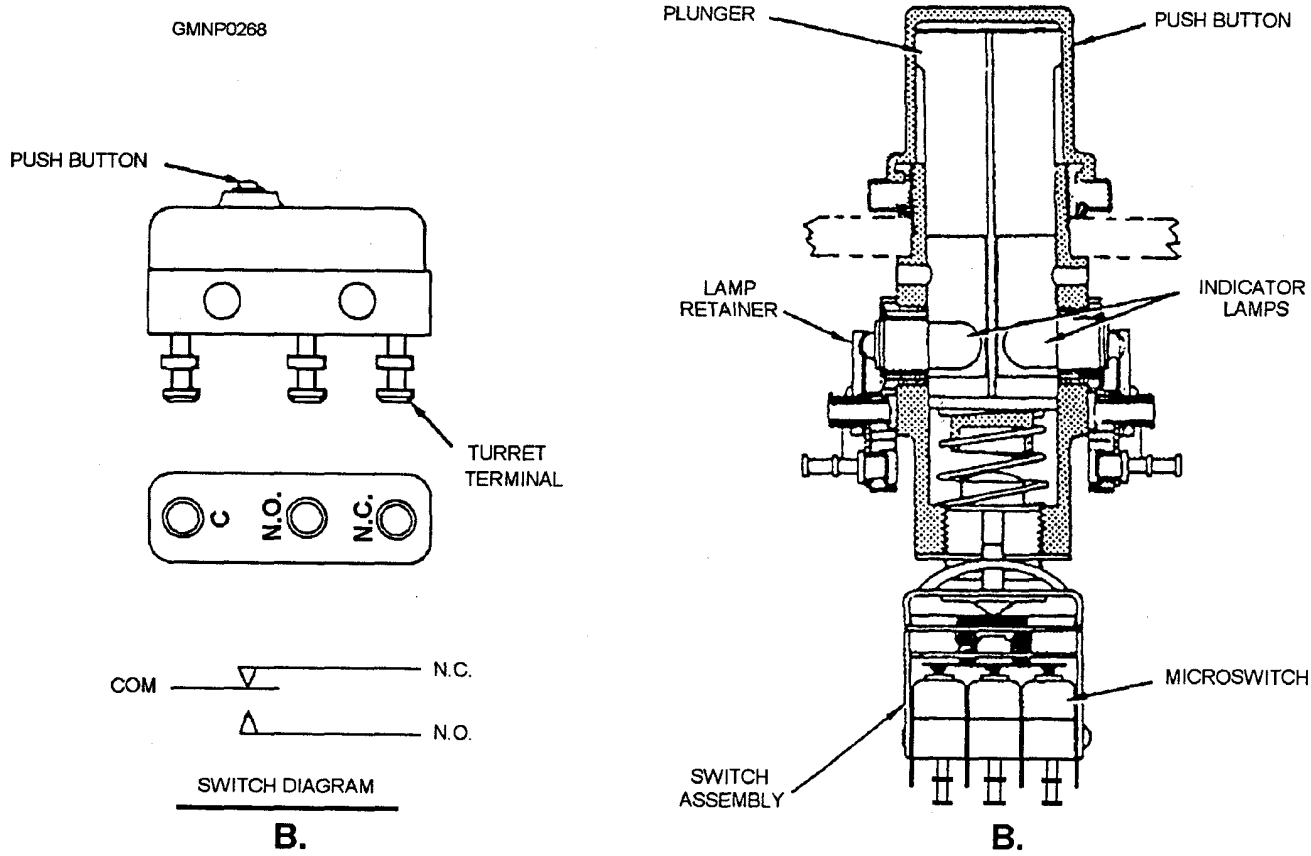

Figure 5-6.—A. Sensitive microswitch; B. Manual push-button switch.

When a sensitive switch is used as an interlock, the plunger (push button) is actuated by mechanical means. The device for moving the plunger can include a rotating cam, lever, wedge, or bellows arrangement.

Sensitive switches of the micro type are also used as manual push-button switches on the control panels for the 5"/54 gun mounts. Figure 5-6, view B, shows a cutaway view of this type of switch. Note that this switch has indicator lamps built into the body of the switch.

Proximity Switches.— Proximity switches, also called Hall-effect switches, are extensively used on gun

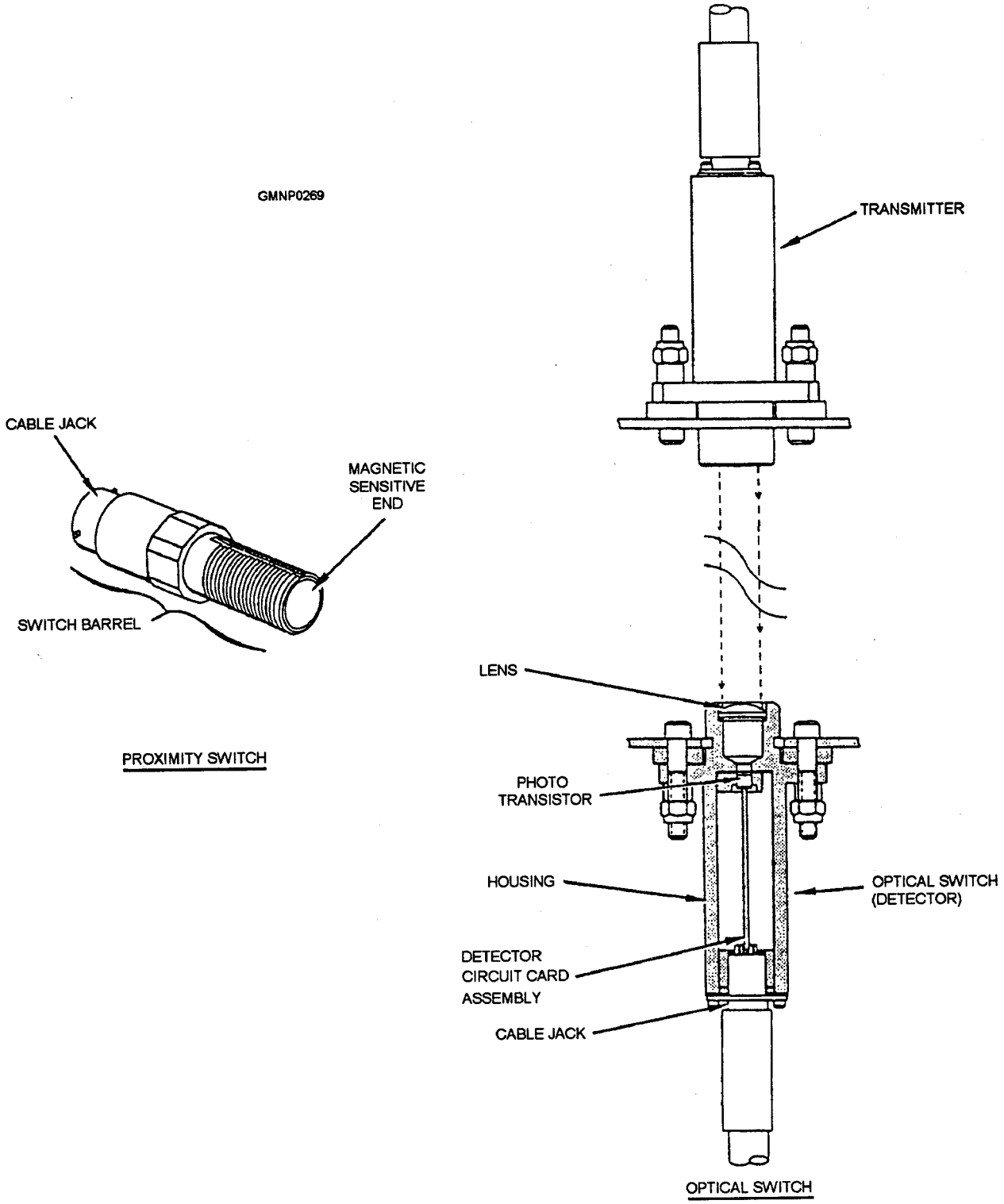

Figure 5-7.—Proximity and optical switches.

mounts and missile launchers. These switches (fig. 5-7) are magnetically actuated devices that sense component positions. A typical proximity switch consists of a switch circuit and a housing with a bayonet connector on one end and an epoxied magnetic-sensitive area on the other end. The switch, enclosed in either a straight or a 90-degree switch housing, is normally mounted on a stationary component. The housing has a quick-disconnect bayonet connector that connects the internal circuitry to the gun mount control system cable.

In operation, the switch senses the position of a magnetic field. The magnet, in a protective housing, normally is mounted on a moving component. As the actuator approaches (comes into proximity), the switch actuates; as the actuator departs (not in proximity), the switch deactuates.

Optical Switch.— The optical switch is found on the upper and lower hoists of the Mk 45 Mod 1 gun to indicate the presence or absence of a projectile or propelling charge. The unit consists of an optical switch (detector) and an infrared light transmitter. On entering the hoist, the round breaks the light beam which deactivates the switch. Micro, proximity, and optical switches all provide inputs to the gun control circuits described in the next section.

Other Types of Interlock Switches.— Transistors can be used as switches in solid-state circuits. More information is presented on these switching devices later in this chapter.

Relays

A relay is simply an electromagnetically operated switch. Relays are designed to open or close a circuit when the current through its coil is applied and removed, or varied in magnitude. The main parts of a relay are a coil wound on an iron core and an armature that operates a set of contacts. A simple relay and circuit are shown in figure 5-8.

Looking at figure 5-8, if you close switch S1, current flows through the coil, energizing the electromagnet and drawing the armature upward. The action of the armature closes the contacts and power is applied to the load. More contacts can be added to the armature so that other functions may be accomplished,

The operating speed of a relay is determined by the time between the closing of the coil circuit and the closing of the relay contacts. In small specially

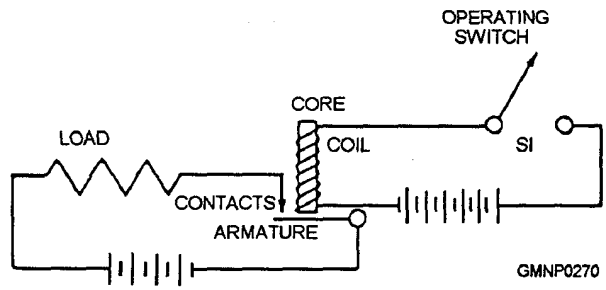

Figure 5-8.—SimpIe relay circuit.

designed relays, like the ones in the 5"/54 gun mount control circuits, the operating speed may be as low as 1 millisecond. The operating speed of a relay may be increased by any technique that reduces eddy currents in the core. Making the core of laminations is one method of reducing eddy currents and thus increasing the operating speed of a relay.

Another method is to place a resistor in series with the relay coil and increase the operating voltage. These actions will increase the speed of closing because, at the instant power is applied to the relay, all the voltage will appear across the coil and the magnetic field will build up faster. The speed of relay operations can be reduced by placing a heavy copper sleeve over the core of the coil. The copper sleeve has the effect of a shorted turn. Current flow in the sleeve opposes the field in the coil as it builds up or collapses, thus delaying the operation of the relay.

The type of material used for contacts depends on the amount of current to be handled. Large power relays usually have copper contacts and use a wiping action to make sure of a good connection. Small relays may use silver or some silver alloy, while in some applications tungsten or some very hard material may be used that will prevent contact burning or oxidation. In general, relays that open and close with a fast positive action cause much less trouble than those that operate slowly. Relays that malfunction or fail completely should be replaced. Relays should not be repaired.

CONTROL RELAYS.— Control relays are used in control circuits to perform switching operations automatically and in the proper sequence.

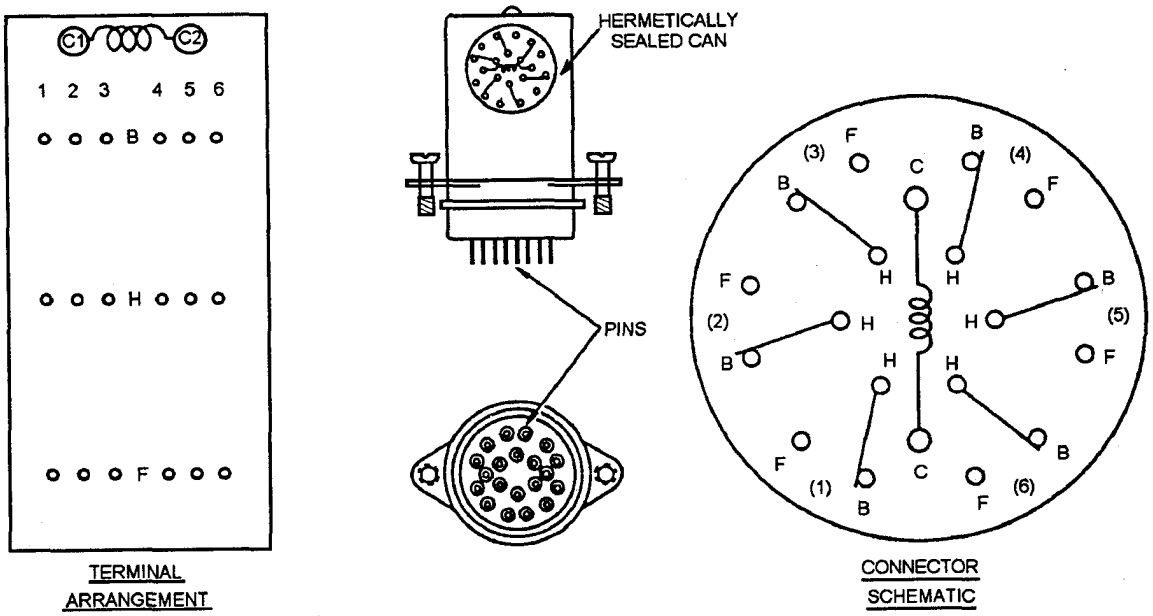

GMNP0271

Figure 5-9.—Miniature "canned" relay.

Miniature-Type Control Relays.— Miniature relays (fig. 5-9), often called "canned" relays, are two-position hermetically housed relays with plug-in pins that mate with a receptacle. Wiring from the receptacle terminal arrangement completes electrical circuits as appropriate. Basic internal components of the miniature relay are a spring-return armature, a coil, and six sets of contacts. (Each set consists of a common contact, a normally open contact, and a normally closed contact.) When the relay energizes, the normally closed contacts (HB) open and the normally open contacts (HF) close.

Time-Delay Relays.— Time-delay relays (fig. 5-10) impose controlled time lapses into electric circuits. The relays consist of pneumatic timing units, coils and switch housings, and wiring terminals. When the coil energizes, the coil plunger acts on the diaphragm in the pneumatic timing unit. Because the relay contacts cannot make (or break) until the air escapes from the diaphragm through an adjustable orifice, the size of the orifice determines the delaying interval. The gun mounts use two types of time-delay relays: slow-make instantaneous-break (SMIB) and instantaneous-make slow-break (IMSB).

POWER RELAYS OR CONTACTORS.— The contactor (also called a power relay or motor contactor) is a heavy-duty relay used to control motor circuits. The coil of the relay is in the 115-volt start-and-run circuit, while three of the contacts (designated A, B, and C) are in the 440-volt motor circuit. Contact D is in the run portion of the start-and-run circuit. The D contact supplies an input to the control circuit which indicates that the contact is closed. There are three sizes of contractors (00, 1, and 3) used in gun mounts. Size 1 is shown in figure 5-11.

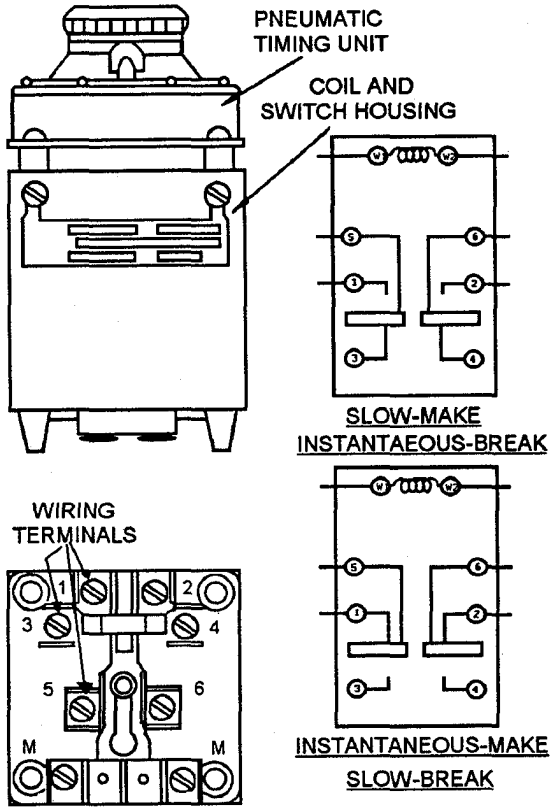

GMNP0272

Figure 5-10.—Tlme-delay relay.

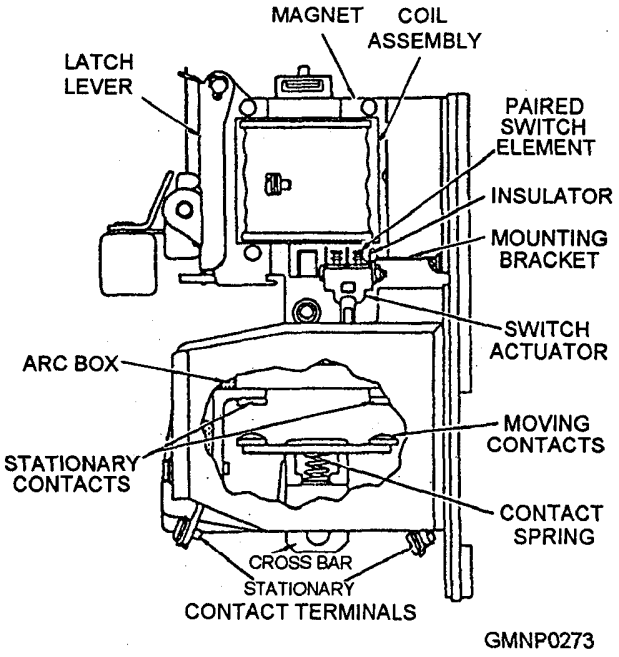

Figure 5-11.—Size 1 contactor.

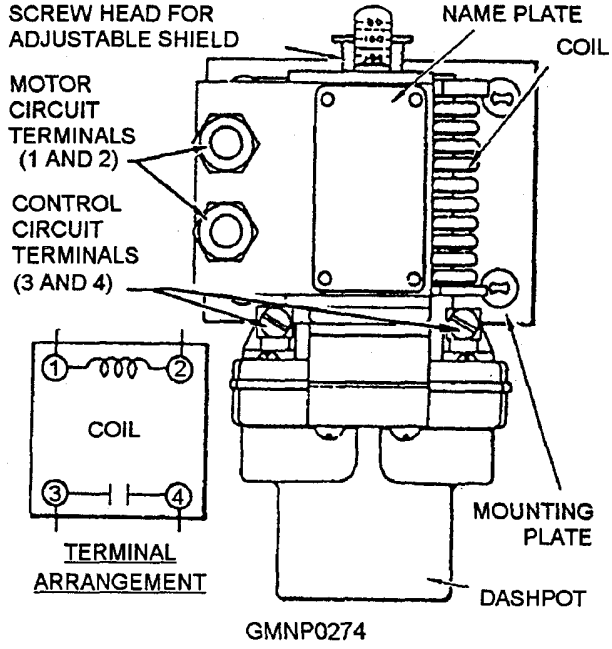

Figure 5-12.—Overload relay.

The main components of the size 1 contactor area coil, an armature, a group of four stationary contacts, a group of four movable contacts (linked to the armature through a crossbar), an inertia shock latch, and an arc suppressor box that encases the contact assemblies.

When the coil energizes, the resultant armature movement pulls the crossbar upward and closes the main contacts (A, B, and C) and the auxiliary contact (D). This action, in turn, completes the 440-vo]t circuit to the associated motor. An inertia shock latch prevents the contactor from closing (if de-energized) or opening (if energized) from inertia shock. When the contactor is subjected to shock, a latch weight moves a slider bar to lock the armature in position momentarily.

The main components of the size 00 and size 3 contractors are basically the same as those of the size 1, except that the size 00 does not have an arc suppressor box. The armature of a size 3 contactor pivots to close its contacts, and it also has five sets of contacts (one more auxiliary contact than the size 1). A kickout spring inside the contactor on the size 3 opens the contacts when the coil de-energizes. This spring also prevents shock or vibration from closing the contactor.

OVERLOAD RELAY.— The overload relay (fig. 5-12) consists of a coil, a plunger, a dashpot, and a pair of switch contacts. The plunger is attached to a disk suspended in an oil-filled chamber (dashpot). The coil connects in series with an associated 440-volt motor supply circuit and the switch contacts are in a 115-volt start-and-run circuit for the motor.

During normal operation, the magnetic flux induced by the coil is not great enough to cause an appreciable movement of the plunger. However, if an overload of sufficient magnitude and duration occurs, the increased current through the coil draws the plunger upward.

When the plunger and disk reach the end of their upward travel, the normally closed contacts open in the 115-volt start-and-run circuit, de-energizing the motor contactor which opens the 440-volt motor supply circuit. With the motor circuit open, the overload relay plunger drops and the relay resets.

Since the dashpot retards upward movement of the plunger disk, the circuit does not break instantaneously during an overload. Two conditions determine the delay time: (1) the size of the orifice in the plunger disk through which the oil must pass and (2) the magnitude of the overload (strength of the magnetic field).

Circuit Breakers

Circuit breakers (fig. 5-13) have two purposes: (1) to perform switching functions and (2) to provide overload protection. Each circuit breaker consists of a housing, a seaIed trip unit, three movable contacts, three fixed contacts, and three arc chutes. Gun mount control systems use two types of circuit breakers—the magnetic trip and the thermal-magnetic trip.

Magnetic trip circuit breakers are used in the 440-volt power supply lines. They provide instantaneous protection against current surges up to 1,400 percent above the rated value of the circuit breaker. These circuit breakers have a set of auxiliary contacts (microswitches) that are wired into the control circuit to indicate the actual position of the circuit breaker contacts.

Thermal-magnetic circuit breakers are used in the 440-volt supply lines to the control transformer and in the gunhouse heating and ventilating supply lines. These circuit breakers provide instantaneous protection against current surges up to 700 percent above the rated value of the circuit breaker. A bimetal element, connected in series with a coil, provides the protection against sustained overloads.

Solenoids

Solenoids convert electrical inputs from control circuits into mechanical outputs that actuate mechanical linkage or hydraulic valves.

All the solenoids consist of a coil and a movable core or armature. When the coil is energized, an electro-magnetic field is created that either pulls or pushes the core. A mechanical linkage is attached to and travels with the core. In response to core movement, the linkage moves something. In most cases, that "something" is a small hydraulic valve (known as a pilot valve). Shifting the pilot valve redirects system hydraulic fluid to (for example) a piston. The piston is made to move so it extends or retracts a particular GMLS or gun mount component (e.g., a latch).

The newer type of solenoid housing used in the Mk 45 gun system or Mk 13 Mod 4 and Mk 26 GMLSs (fig. 5-14) includes a nondetented two-solenoid configuration and pilot valve. (The function of the circuit board is described in a later section of this chapter.) This unit virtually replaces the older types of solenoid housings that were attached to large valve blocks to control the operation of hydraulic equipment. The small pilot valve in this solenoid unit controls the flow of hydraulic fluid to system operating pistons.

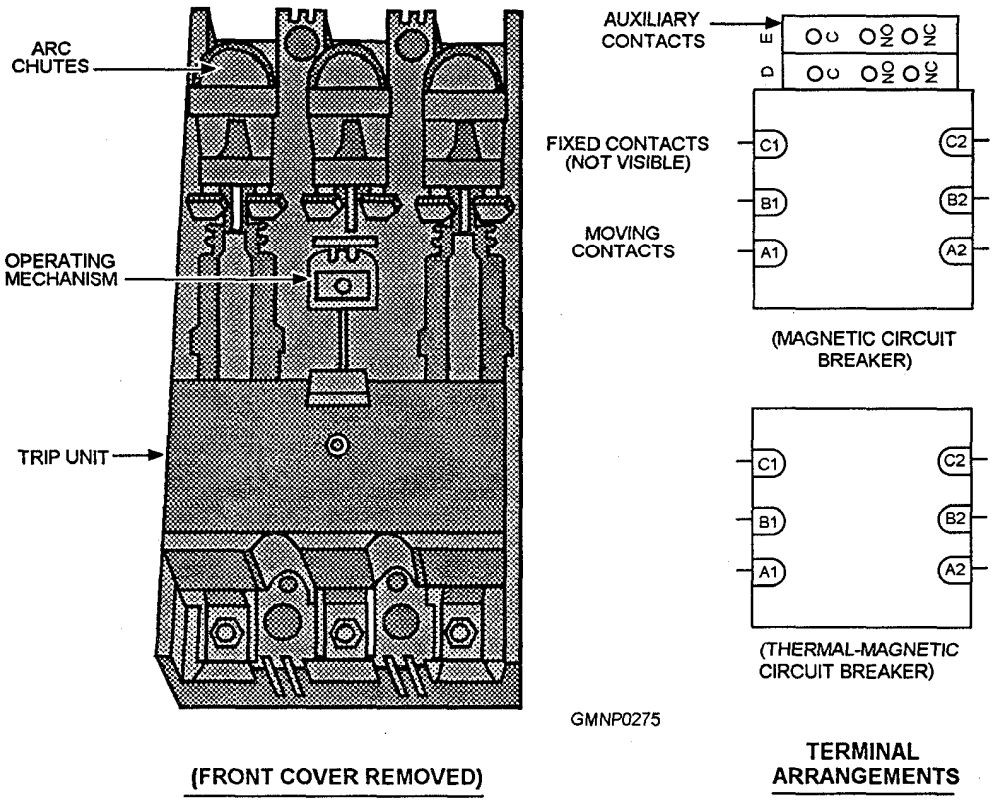

Figure 5-13.—Circuit breaker and terminal arrangements.

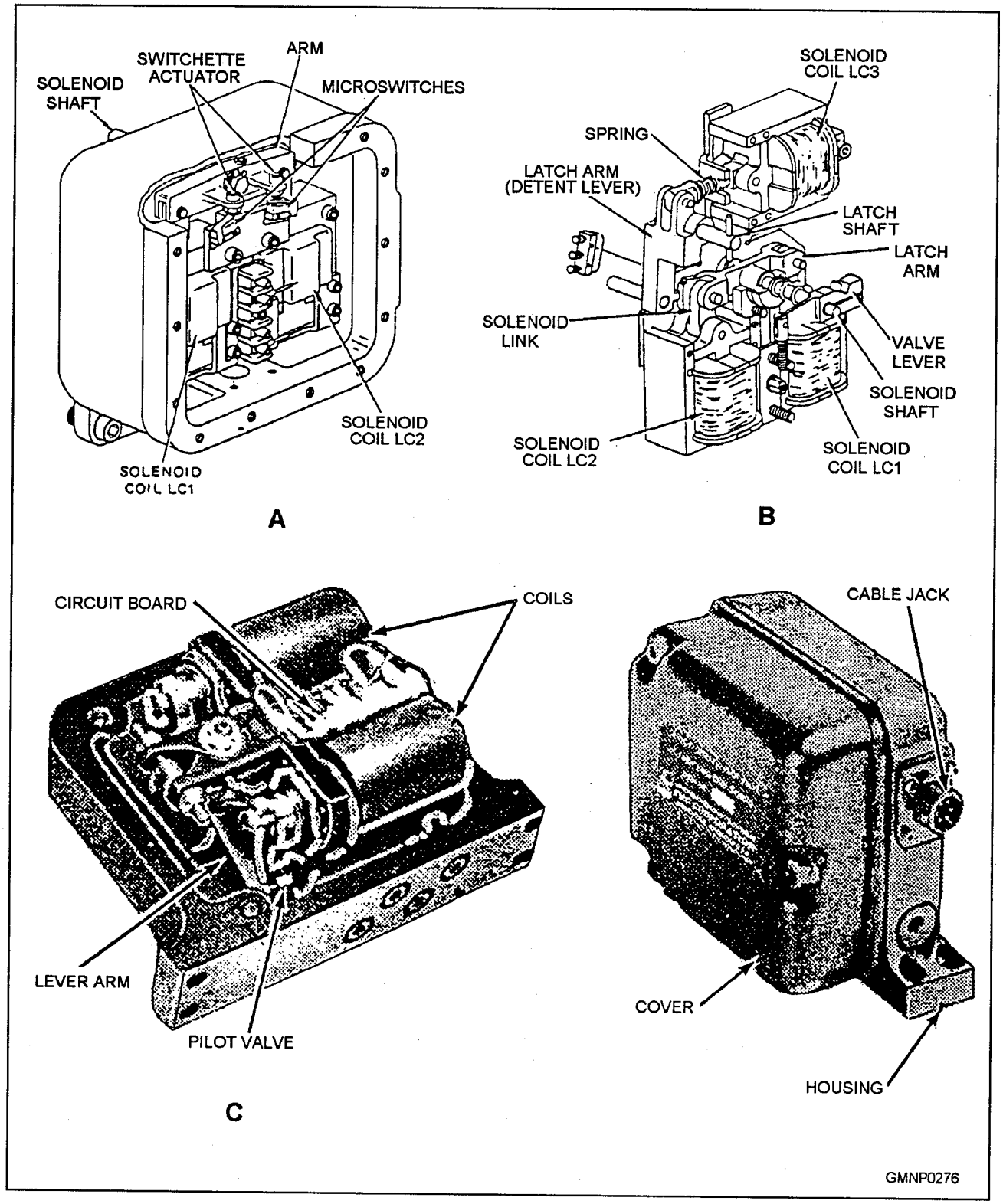

Figure 5-14.—Solenoid assembly.

While many times smaller, these units efficiently perform the same function as the large solenoid housing and valve block configurations. These units are also much easier to maintain. When a solenoid malfunctions, the entire unit is removed and replaced simply by removing four bolts. The unit requires no adjustment and, because of its configuration, it also requires fewer hydraulic seals that can leak and lead to time-consuming repairs.

Therefore, a solenoid plays an important role in GMLS and gun mount operation. It serves as the primary link between the electrical control system and the GMLS's hydraulic system.

The solenoid assembly shown in figure 5-14 is the type used by the Mk 13 Mod 4 and Mk 26 GMLSs and the Mk 45 gun mount. The housing of the assembly also serves as part of the hydraulic valve block. Energizing either coil pivots the lever arm. It shifts the (one) pilot valve to redirect hydraulic fluid to the associated valve block. De-energizing the coils allows the return spring to shift the pilot valve back to neutral.

ELECTRICAL SYMBOLS AND REFERENCE DESIGNATIONS

The symbols presently used to designate electrical/electronic parts and assemblies in NAVSEA drawings are specified in ANSI Y32.2-1975, *Graphic Symbols for Electrical and Electronics Diagrams.* This publication provides alternate methods for symbolizing certain parts and should be consulted when a symbol is not clearly understood. The electrical/electronic schematic print section of your systems maintenance manual will normally provide a description of the symbols used. Figure 5-15 shows the electrical symbols used in the reference drawings of gun mounts currently in service.

In some modem gun mounts and GMLSs, other than standard reference designations may be used for parts peculiar to a particular system. In this event, the manufacturer assigns reference designation letters and numbers. Normally, the designations used by each manufacturer are published in the OP for that particular gun mount.

In general, the electrical components or devices used in a modem gun mount or GMLS (the 5"/54 Mk 45 or Mk 13 Mod 4) are identified by a combination of letters and numbers or groups of letters and numbers. Table 5-1 is a partial listing of first- and second-group designation used on the Mk 45 gun mount. The first two letters identify a specific type of component. The third letter identifies the major equipment assembly within which the component is located. The number that follows the third letter indicates the number of the

Table 5-1.—Electrical Component Designations

MODERN DESIGNATIONS	NOMENCLATURE
AR	Amplifier
BC	Motor (control synchro, servo, etc.)
BP	Motor (electric power)
CA	Capacitor
CB	Circuit breaker
CR	Diode
DS	Light, bell, buzzer (warning device)
EP	Control panel
FE	Fuze
GC	Generator (control, synchro, tach, etc.)
GP	Generator (electric power)
KC	Relay (control)
KP	Relay (power, contactor)
KT	Relay (time delay)
LC	Solenoid
LH	Solenoid housing
QA	Transistor
RA	Resistor
SI	Switch (interlock)
SM	Switch (manual)
TC	Transformer (control)
TP	Transformer (power)
VA	Tube
5"/54 Mk 42 Gun - Third Letter Major Assembly Codes	
A and B	Loader drums
C and D	Lower hoist
E	Elevation
F	Carrier
G and H	Upper hoists
J and K	Cradles
L and M	Fuze setters
O and P	Transfer trays
R	Rammer
S	Empty case tray and ejector
T	Train
W	Breech mechanism
5"/54 Mk 45 Gun - Third Letter Major Assembly Codes	
B	Breechblock and housing
C	Cradle
E	Elevation
F	Firing
H	Hoist
K	Lower hoist
L	Loader
M	Empty case ejector
P	Fuze setter
R	Rammer
S	System
T	Train
X	Loading system, general
Z	Indicators (warning, communication, misc.)

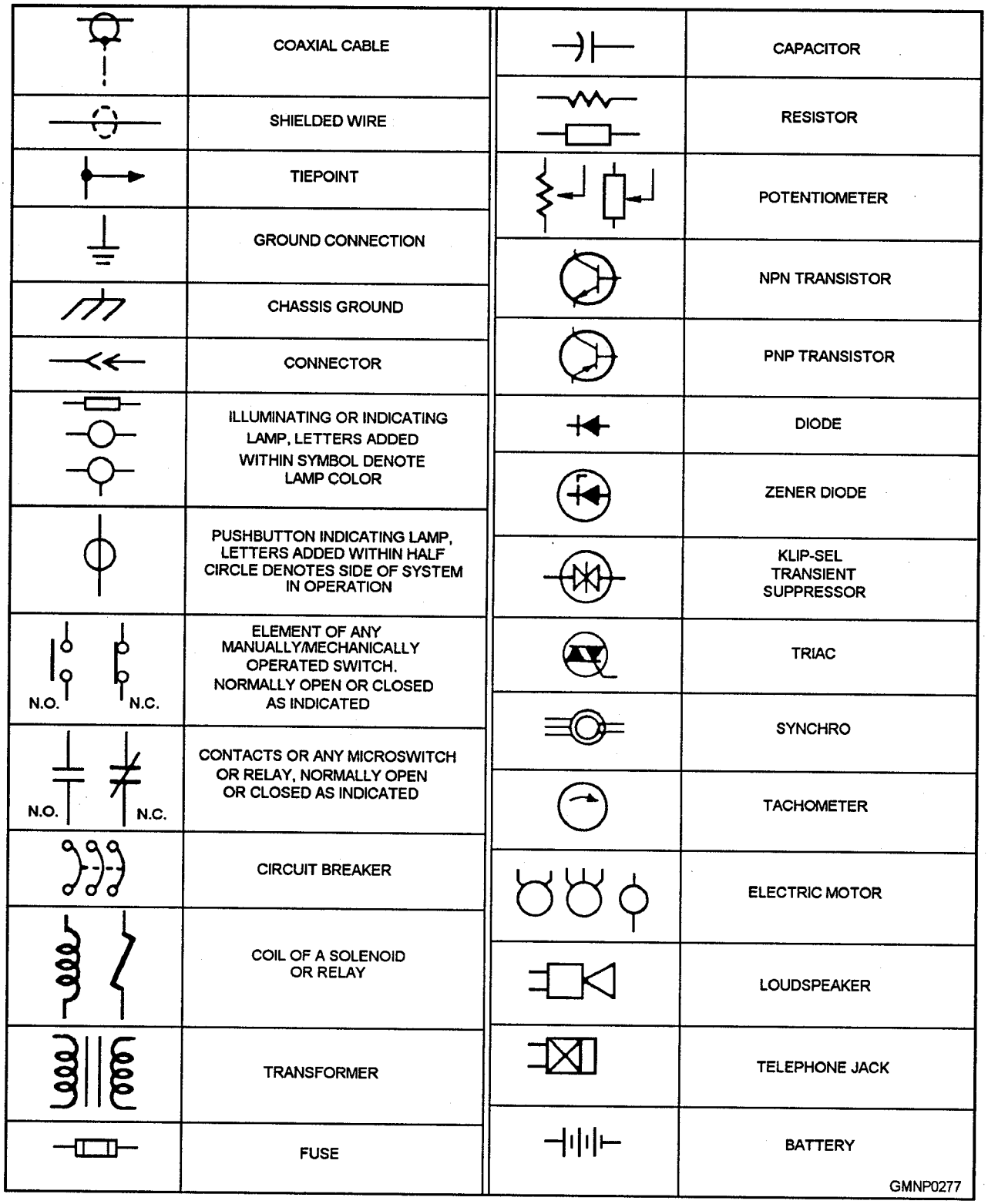

Figure 5-15.—Electrical symbols.

device within the assembly. For example, SIH1 is an interlock switch (SI) used in the left upper hoist(H) and the number 1 distinguishes this particular switch from all other switches in the hoist.

As is often the case, there is one modem gun mount (76-mm 62-caliber Mk 75) in which both the electrical symbols and designations are not all consistent with other gun mounts. For example, a relay is designated with a number followed by the letter *K*, followed by another number (1K1, 2K1, and soon). The symbol for a relay is a rectangular box.

CONTROL CIRCUITS

LEARNING OBJECTIVE: Recall electronic control circuit components, how they function, and proper troubleshooting procedures.

Modem control circuits allow a single operator to control the entire operation of a gun system or GMLS from one electrical panel. Low-voltage components and wiring are used to control the flow of high-voltage power to drive motors and solenoids. Imagine the size of a switch or pushbutton that would be required to control 440 VAC three-phase power to a drive motor. Most mounts and GMLSs have three to five drive motors. This number of motors alone would require a second panel and operator just to start and stop the drive motors.

We will describe the newer solid-state logic circuits used to control the 5"/54 Mk 45 gun system. You will see how a circuit that looks fairly complicated at first glance actually is made up of individual one-function circuits. These smaller circuits are made up of just one or two simple devices (and their associated wiring) and do just one job. When properly connected to other one-function circuits, they can act automatically to start or stop current flow in a circuit, combine or divide these circuits, and act as safety devices to protect equipment and personnel. The transistor is the component that makes all this possible, so that is where we will begin. We will also describe the control circuits used in the newer 5"/54 Mk 45 gun system. All GMLSs control circuits are similar to the 5"/54 Mk 45.

TRANSISTORIZED CONTROL CIRCUITS

A transistor is a solid-state device constructed of semiconductor materials. Transistors are capable of performing many of the functions of different types of electronic and electrical components, such as electron tubes, interlock relays, switches, control relays, and current amplifiers. In gun system control circuits, transistors are used as electronic switches that control the flow of current.

In most cases, transistors are more desirable than tubes for ordnance equipment because they are smaller, require no warm-up power, and operate at low voltages with comparatively high efficiency.

Semiconductors are the basic components of a transistor. How these materials behave and the electrical conduction properties that give the transistor its basic characteristics are explained in NEETS, Module 7, *Introduction to Solid-State Devices and Power Supplies,* NAVEDTRA 172-07-00-82.

Transistors are classed as either PNP or NPN, according to the arrangement of impurities in the crystal. The schematic symbols for both types are similar but not identical, as illustrated in figure 5-16. A heavy straight line represents the base, and the two lines slanted toward the base represent emitter and collector terminals. An arrow head in the emitter line always points toward the N-type material. Thus, if the arrow points toward the base line, the base is of N-type material. Since the base is always of the opposite type of material from the emitter and collector, the transistor is of the PNP type. Similarly, if the arrow points away from the base line (toward the emitter), the transistor is of the NPN type. In other words, the arrow points toward the base in PNP transistors and away from the base in NPN transistors.

Recall that we said transistors are used as electronic switches to control the flow of current in a circuit. Let us now explore how this control is possible. Transistors used as switches are operated in one of two conditions: (1) the transistor is reverse bias (nonconducting) to open a circuit, or (2) the transistor is forward bias (conducting

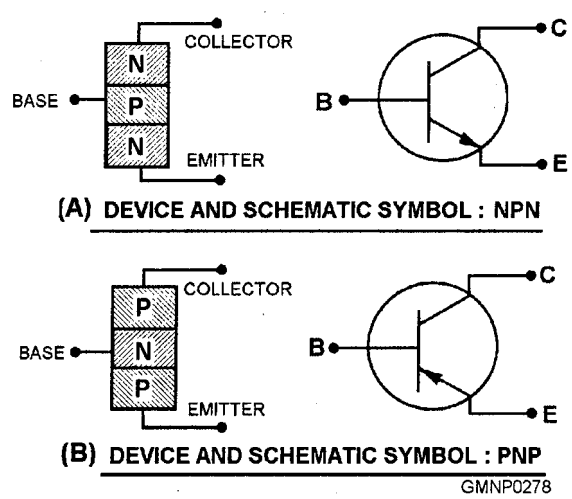

Figure 5-16.—Transistor schematic symbols.

heavily) to close a circuit. Under these conditions, it acts as a simple ON-OFF toggle switch.

A transistor conducts when it is forward biased and stops conducting when it is reverse biased. An NPN transistor is forward biased when the electrical potential felt at the base is HIGH in relation to the electrical potential felt at the emitter. A PNP transistor is just the opposite; it is forward biased when the potential at the base is LOW in relation to the emitter. To illustrate the principle of electrical potential, think of a garden hose with the water pressure turned on. With the nozzle turned off, no water flows through the hose, but water pressure is felt at the nozzle.

LOGIC CIRCUITS

Logic circuits function just like the transistorized circuits we just described; they just look different. The basic component of both systems is the same-the transistor. However, instead of individual transistors attached to a circuit board and wired together to form a circuit, logic circuits use silicon chips printed or etched with several transistors and a circuit. The etched circuits are designed to perform a standard summarizing function. They take several inputs in and provide one output. We will describe the operation of logic circuits as we examine the circuit used to close the breechblock of a Mk 45 Mod 1 gun mount.

Logic Symbols

The silicon chips in a logic circuit, called "gates," come in five varieties: AND, OR, NAND, NOR, and inverter. The most commonly used are the AND, OR, and inverter gates. Table 5-2 illustrates the symbol for

Table 5-2.—Logic Circuit Symbology

GATE	SYMBOL	DESCRIPTION
AND	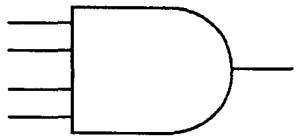	AN AND GATE IS A LOGIC CIRCUIT HAVING TWO OR MORE INPUTS AND A SINGLE OUTPUT. THE OUTPUT IS LOW ONLY WHEN ALL INPUTS ARE LOW. A HIGH RESULTS WHEN ONE OR MORE INPUTS ARE HIGH.
OR	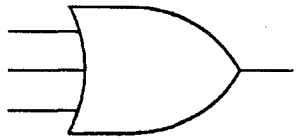	AN OR GATE IS A LOGIC CIRCUIT HAVING TWO OR MORE INPUTS AND A SINGLE OUTPUT.V THE OUTPUT IS LOW WHEN AT LEAST ONE INPUT IS LOW AND IS HIGH WHEN ALL OF THE INPUTS ARE HIGH.
NAND	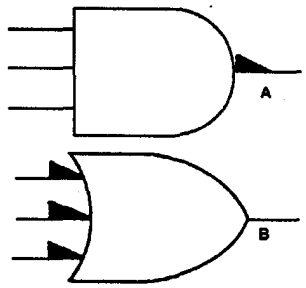	A NAND GATE IS A LOGIC CIRCUIT HAVING TWO OR MORE INPUTS AND A SINGLE OUTPUT. THE OUTPUT IS HIGH ONLY WHEN THE INPUTS ARE ALL LOW. IF ANY OR ALL INPUTS ARE HIGH, THEN THE OUTPUT IS LOW.
NOR	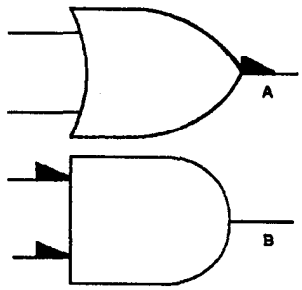	A NOR GATE IS LOGIC CIRCUIT HAVING TWO OR MORE INPUTS AND A SINGLE OUTPUT. THE OUTPUT IS LOW ONLY WHEN ALL THE INPUTS ARE HIGH. IF ANY OR ALL OF THE INPUTS ARE LOW, THEN THE OUTPUT IS HIGH. WHEN BOTH INPUTS ARE WIRED TOGETHER, THE NOR GATE IS USED AS AN INVERTER TO CHANGE THE LOGIC CIRCUIT LOW TO A HIGH INPUT TO A SOLENOID DRIVER.
INVERTER	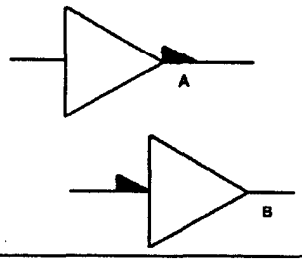	AN INVERTER IS A LOGIC CIRCUIT THAT RECEIVES ONE INPUT AND PROVIDES A SINGLE OUTPUT OF THE OPPOSITE STATE. IF THE INPUT IS LOW , THEN THE OUTPUT IS HIGH. IF THE INPUT IS HIGH, THEN THE OUTPUT IS LOW. GMNP0279

each gate and provides a brief description of its function.

Logic Circuit Operation

Figure 5-17 shows a typical logic circuit that uses inverted and buffered switch outputs to trigger a solenoid driver. The solenoid driver, in turn, controls a solenoid that initiates a gun-loading cycle, in this case, closing the breech of a Mk 45 Mod 1 gun.

This circuit consists of AND gates, OR gates, and an inverter. The numbers within the gates identify the printed circuit board in the EP2 panel on which the circuit is located. The numbers on the input and output lines of the gates identify the terminal pin that connects to that point. The circled numbers in figure 5-17 are

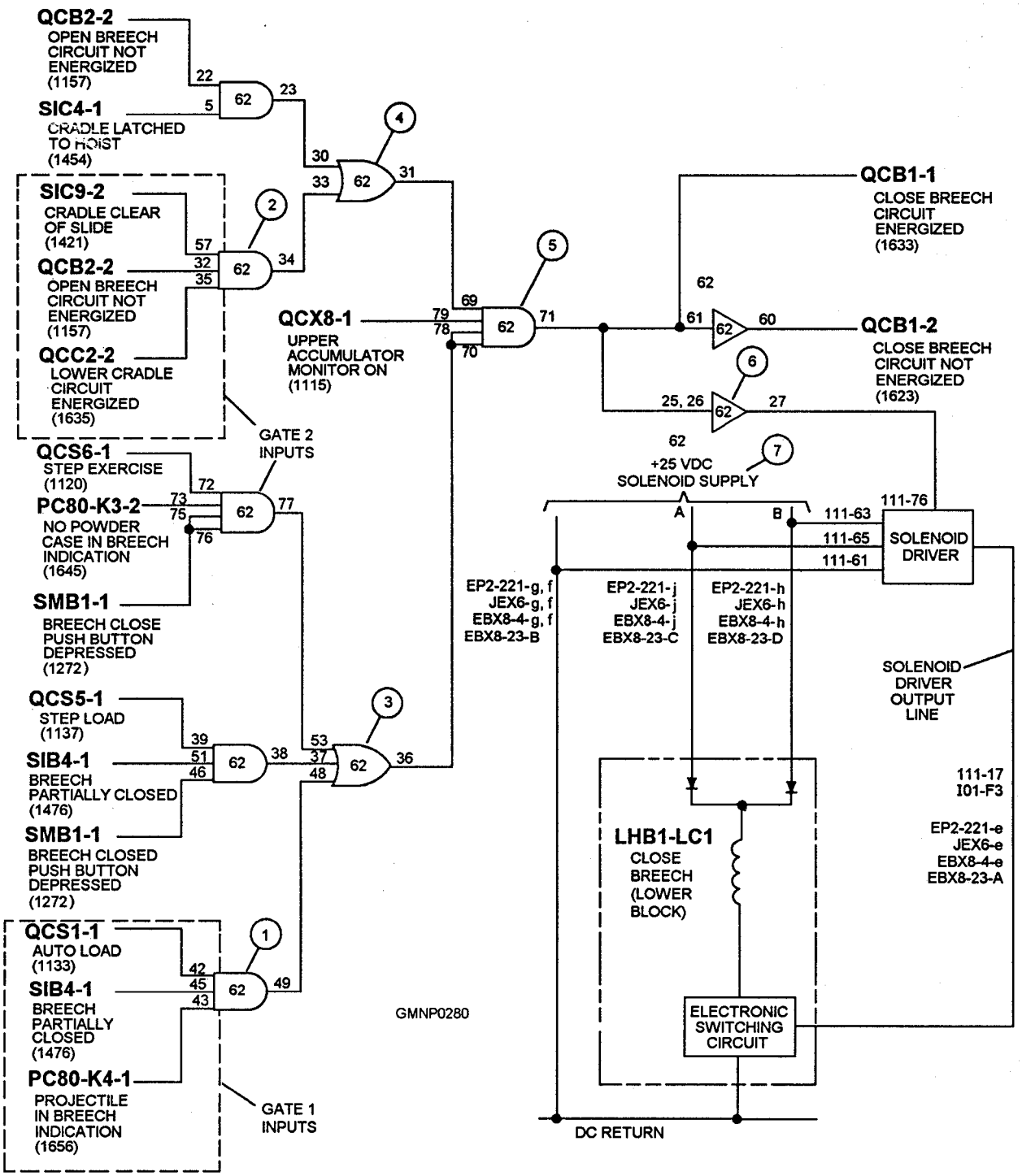

Figure 5-17.—Typical logic control circuit.

added for ease in identifying items as we illustrate the operation of the circuit.

Inputs to the logic gates are identified by both alphanumeric nomenclature and a brief description of what the input means. The input SIB4-1 (BREECH PARTIALLY CLOSED) to gate 1 comes from the number 1 output leg of the inverter buffer associated with SIB4 (fig. 5-18). When the breech is partially closed, the switch is activated and the high switch output through the inverter buffer produces a low logic input at input pin 45 of gate 1. Remember, gate 1 is an AND gate and requires all inputs to be LOW to produce a LOW output.

The inputs to gates 1 and 2 in figure 5-17 initiate the operation of breech closing solenoid LHB1-LC1 in the normal mode of operation, AUTO LOAD. The six inputs indicate that the gun-loading system has delivered a complete round into the breech of the gun, the LOWER CRADLE circuit is energized, and the cradle has moved clear of the slide. With these conditions met, gates 1 and 2 pass a LOW logic signal to gates 3 and 4, respectively. Since gates 3 and 4 are OR gates, they require only one LOW input to produce a LOW output. The two LOWS from gates 3 and 4 are applied, with another LOW from summary circuit QCX8, to gate 5. When all inputs to gate 5 are LOW, it passes a LOW to gate 6, which is an inverter. With a LOW input, the inverter passes a HIGH output to the solenoid driver. This solenoid driver does not control the current flow to the solenoid. The output of the solenoid driver is used to forward bias a transistor circuit located in the solenoid housing. This output energizes the solenoid by allowing current to flow through the coil to DC RETURN. The A and B legs of the +25 VDC solenoid supply, point 7, represent a primary and secondary power supply to the solenoid.

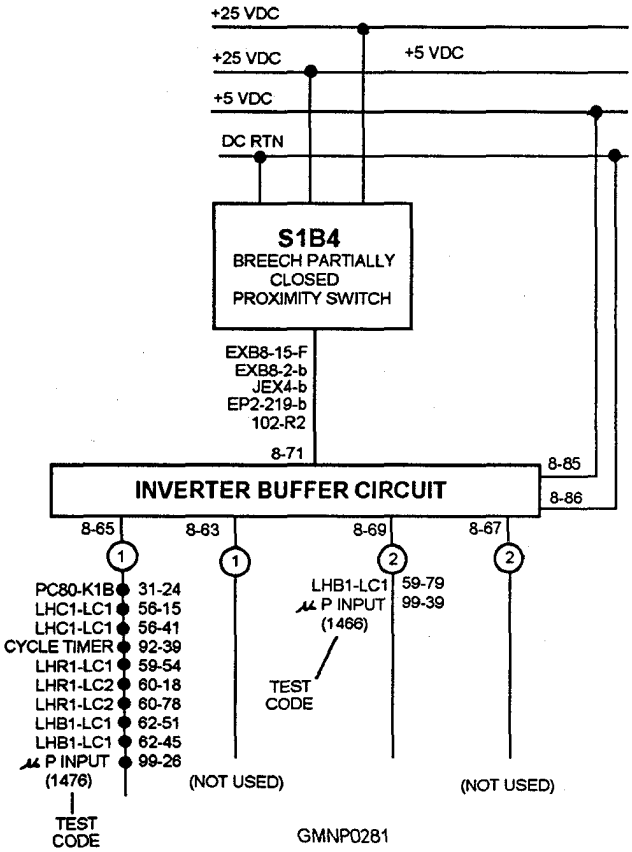

Figure 5-18.—Inverter buffer circuit for SIB4.

Troubleshooting Logic Circuits

The Mk 45 Mod 1 gun system is equipped with a microprocessor that monitors the sequence of operation of the gun through equipment position switch inputs. Notice the last output destination on the 1 and 2 legs of the inverter buffer circuit shown in figure 5-18. µp INPUT indicates that switch output is supplied to the microprocessor. On the EP-2 panel there is a Test/Fault Code Keyboard and Display (fig. 5-19) that is used to interface with the microprocessor. To test the output of a switch or summary circuit, the operator needs only to type in the test number for that circuit or switch. The result of the testis displayed as a 0 or a 1 in the Test/Fault Code Display above the keyboard. A zero (0) indicates a LOW output and a one (1) indicates a HIGH output. In this case, the test number for SIB4 is 1476 for leg 1 and 1466 for leg 2 (fig. 5-19). The test code number is

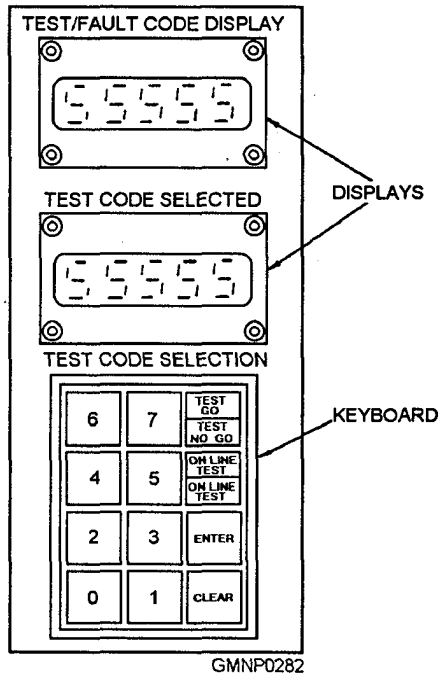

Figure 5-19.—Test/Fault code keyboard and displays.

displayed in brackets along with the circuit or switch input/output identification (note the same number [1476] in the SIB4-1 input to gate 1 in fig. 5-17).

Logic circuit failures are isolated much the same as they are in the older types of control circuits. Refer to figure 5-17 as we walk through a typical troubleshooting routine. You have verified equipment position and determined that the equipment stopped at the CLOSE BREECH step in the loading sequence. The first problem is to isolate the fault to one side of the circuit. This is done by entering the test code for QCB1-1 [1633]. A LOW would indicate the problem is in the right side of the circuit, in gate 6—the solenoid driver or the solenoid. Let us assume we read a HIGH here, the problem is in the left side of the circuit. Since there are no test codes for gates 3,4, and 5, we skip over to the switch inputs for gates 1 and 2. If all the inputs to gates 1 and 2 are LOW, the problem is on board 62. A HIGH at any of these test points would lead you back through the inverter buffer circuit for that input. In this case we will assume a HIGH input is detected at SIB4-1. Refer to figure 5-18 as we examine the inverter buffer for SIB4. Since we have read a HIGH at leg 1, test code [1476], we can assume the inverter buffer is functioning if we read a LOW on leg 2, test code [1466]. These tests lead us back to the proximity switch. After verifying that the switch is in proximity, we test the switch by checking switch input at point 8-71. This test is accomplished using a circuit card extender. The circuit card extender allows you to take input and output readings on a particular circuit card while the system is energized. The circuit card extender provides an extended circuit card jack with test points for each pin connection. A LOW reading at pin 8-71 would indicate a bad proximity switch.

WARNING

The system should always be de-energized when removing electronic components to avoid shock hazard and damage to the equipment.

If a fault is isolated to a circuit card, the system provides a test slot to verify your diagnosis. Simply insert the suspected card in the test slot and enter the appropriate test code for that type of card.

Fault Codes

In some cases, a malfunction in the system will be detected and presented as a fault code on the Test/Fault Code Display. The fault codes are defined in volume 1 of the system OP along with a systematic procedure for isolating the defective component.

SYNCHRO CIRCUITS

LEARNING OBJECTIVE Recall the purpose and advantage of synchros in naval ordnance equipment.

Synchro is the name given to a wide variety of position-sensing devices used to convert mechanical signals to electrical signals or to convert electrical signals to mechanical signals. The name *synchro* comes from the word *synchronize* that means "to happen or take place at the same time." All synchros are self-synchronous; hence, the name is most descriptive of their basic action.

PURPOSE OF SYNCHROS

The purpose of synchros is the precise and rapid transmission of data among equipments and stations. The change in course, speed, and range of targets, and the changes in the position of the ship in relation to the position of the target must be acted upon in a minimum of time. Speed and accuracy of data transmission are most important. Without the position-sensing device known as the synchro, the offensive and defensive capability of the fleet would be greatly limited. Navy ships rely on synchros for rapid data transmission within weapons systems in such equipments as computers, faze setters, sight setters, guns, and missile launchers. Gun and GMLS system power drive controls make extensive use of synchros.

ADVANTAGES OF SYNCHROS

The flexibility of synchros over mechanical mechanisms, such as gearing and shafting, gives them marked advantages; for example:

- The controlling unit can be along distance from the controlled unit.
- Any obstacle in the path can easily be bypassed by leading connecting wires around it.

- The synchro system uses very little electrical power and eliminates the necessity of mechanical linkages between widely separated units.

Besides the advantages of using synchros over mechanical mechanisms, there are other advantages:

- They provide continuous, accurate, and visual reproduction of important or need-to-know information between widely separated stations.
- They have good reliability, requiring minimum maintenance.
- They are small in size, providing a significant saving in space and weight.
- They have a wide adaptability without sacrificing precision.

Synchro systems are important in the ordnance field in controlling naval weapons because of their accuracy and speed. Experience with naval weapons control and operation of ordnance readily proves the importance of the synchro mechanism. A point to remember is that naval weapons controlled from remote stations must use synchro systems for their control. A well-placed shot can save many lives, and the accuracy of a weapon depends upon the correct operation of the synchro system.

Classification of Synchros

Synchros work in teams. Two or more synchros interconnected electrically form a synchro circuit. Basically, synchros can be divided into three classifications: (1) transmitters, (2) receivers, and (3) differentials.

The synchro transmitter is located at the controlling station; its output is an electrical order signal. These synchros were originally called synchro generators but are now functionally classified into two types: (1) torque transmitter (TX) and (2) control transmitter (CX).

Torque and control transmitters are mechanical y identical. However, the types of systems in which they are used differ. Torque transmitters are used in systems that require a mechanical output (dials, etc.), while control transmitters are used in systems that require an electrical output.

The synchro receiver is located at the station being controlled, and its output can be either electrical or mechanical, depending on the type of synchro used. These synchros are functionally classified into the following types: (1) torque receiver (TR) and (2) control transformer (CT).

Torque receivers are used where the rotors must perform a mechanical function, such as positioning a dial or valve. The main difference between torque receivers and torque transmitters is in their rotors. Rotors of torque receivers have a damper, while rotors of torque transmitters do not. Torque receivers were originally known as synchro motors.

Control transformers are used where an electrical signal output is required. It is safe to say that all power drives controlled by amplifiers also have control transformers.

The synchro differential is used to add or subtract two signals and to transmit the result either to another synchro or as a mechanical output. In either case, the differential can always be identified by its rotor (R) leads. All other synchros have only two rotor leads while the differential has three. Functional y, differentials are classified as (1) torque differential transmitter (TDX), (2) control differential transmitter (CDX), and (3) torque differential receiver (TDR).

A mechanical device known as an inertial damper is used to prevent oscillation or spinning when the rotor of the torque synchro receiver turns in response to a sudden change of a received signal. The most common type of inertial damper consists of a heavy brass flywheel that is free to rotate around a bushing attached to the rotor shaft. A tension spring on the bushing rubs against the flywheel so that they turn together during normal operation. If the rotor shaft tends to change its speed or direction of rotation suddenly, the inertia of the damper opposes the changing conditions, and the resulting friction between the spring and the flywheel dampens the tendency to oscillate. Because of the inertia damper, torque receiver and transmitter synchros are not completely interchangeable; a receiver may be used as a transmitter, but a transmitter is not suitable for use as a receiver.

Synchro Symbols

A synchro consists of a rotor (R) and a stator (S). The letters *R* and S are used to identify rotor and stator connections both on the synchro and in wiring diagrams and schematics. Synchros are represented by the

symbols shown in figure 5-20. The symbols shown in parts (A) and (B) are used when it is necessary to show only the external connections to a synchro, while those shown in parts (C), (D), and (E) are used when it is important to see the positional relationship between rotor and stator. The small arrows on the rotors in parts (C), (D), and (E) indicate angular displacement of the rotor; in this illustration the displacement is zero.

Synchro Terms

Some standard synchro terms that you will use are defined as follows:

Rotor position: Amount of rotor offset from zero position, measured in degrees, minutes, or seconds

Electrical zero: Standard position used as the electrical reference point from which all angular displacements are measured (not necessarily the zero position of the dial)

Angular position: Counterclockwise (viewed from the shaft extension end) angular rotor displacement from electrical zero position

Direction of rotation: Clockwise or counter-clockwise rotor rotation, determined when facing the shaft extension end of the synchro

Increasing reading: Reading transmitted to a synchro when numerical value of the information transmitted increases

BASIC PRINCIPLES OF SYNCHROS

Synchros are electromagnetic devices; therefore, a review of magnetism will be necessary to understand synchro principles.

A bar magnet illustrates the magnetic field and pole relationship of the synchro. The lines of force flow from the south pole to the north pole inside the magnet, as shown in figure 5-21.

Two bar magnets shown in figure 5-21 illustrate the actions of like and unlike poles in bar magnets.

Three bar magnets, spaced 120 degrees apart, and a removable bar magnet free to pivot within the ring of mounted magnets show basic synchro principles (fig. 5-22). If the ring of three magnets is fixed, the single pivoted magnet moves so that its south pole is in line with the north pole of magnet No. 1. Since its north pole is attracted equally by the south poles of magnets 2 and 3, it will remain between the two. The pivoted magnet, therefore, aligns itself with magnet No. 1. The three magnetic fields combine to form one resultant

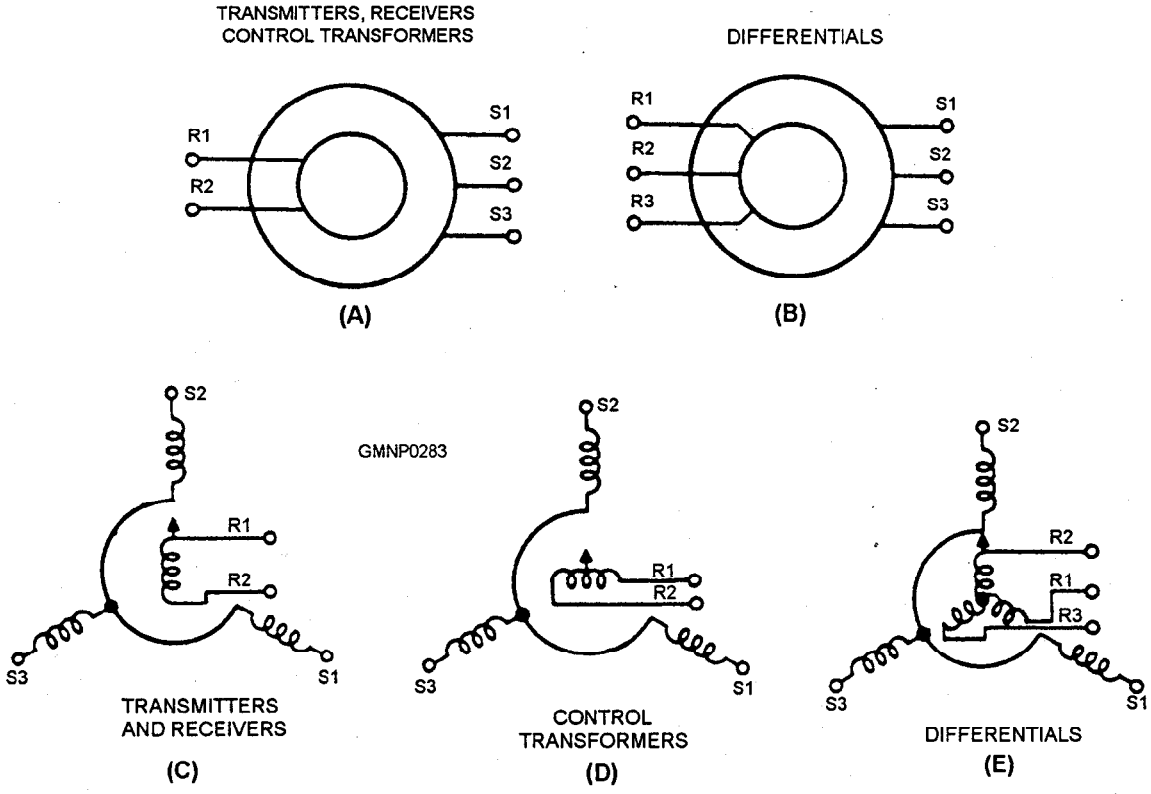

Figure 5-20.—Schematic symbols for synchros.

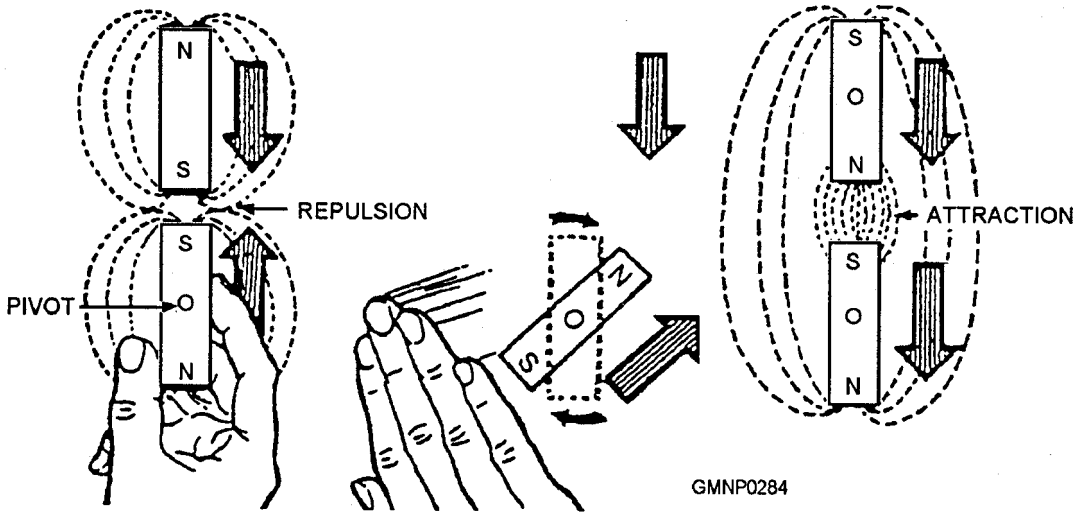

Figure 5-21.—Repulsion and attraction.

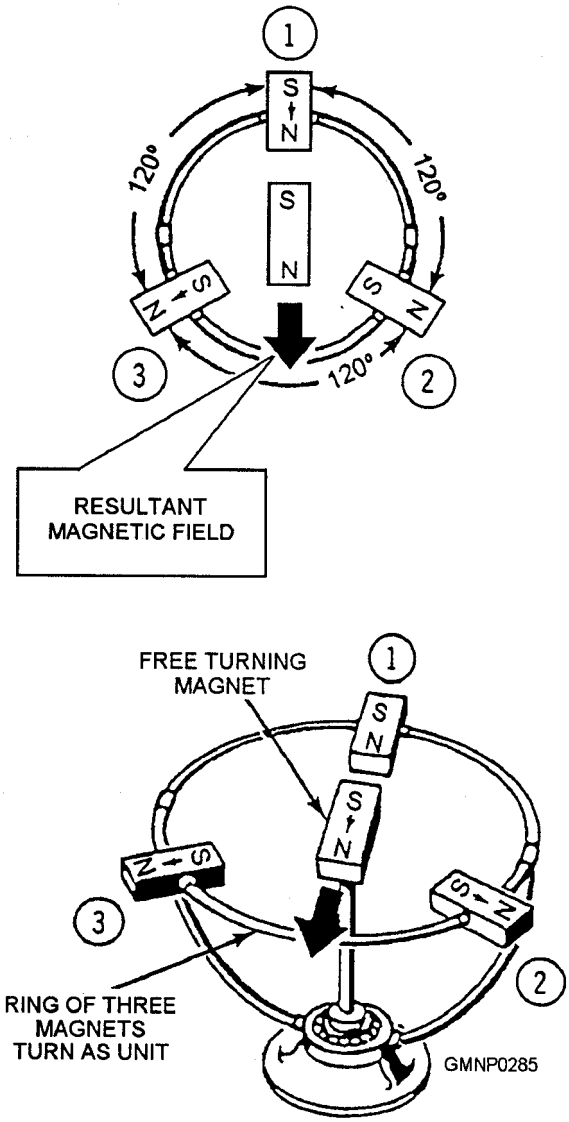

Figure 5-22.—Pivoted bar magnet.

magnetic field. If the three magnets are now rotated 120 degrees and held in that position, the resultant magnetic field is also rotated through 120 degrees. The pivoted bar magnet will turn in the same direction so that it remains aligned with the resultant magnetic field of the three stationary magnets. This alignment illustrates the action of a torque synchro receiver.

Three dc electromagnets could be used in place of the three permanent magnets mounted on the ring, and the effect on the magnet pivoted in the center would be the same. By feeding the proper amount of current in, the proper bar magnet can be made to rotate in either direction. The permanent magnet pivoted in the center could also be replaced by an electromagnet (fig. 5-23).

Because synchros operate on ac voltages, the magnet (R1, R2) pivoted in the center is energized by an ac source; the fixed magnets (S1, S2, S3) are also

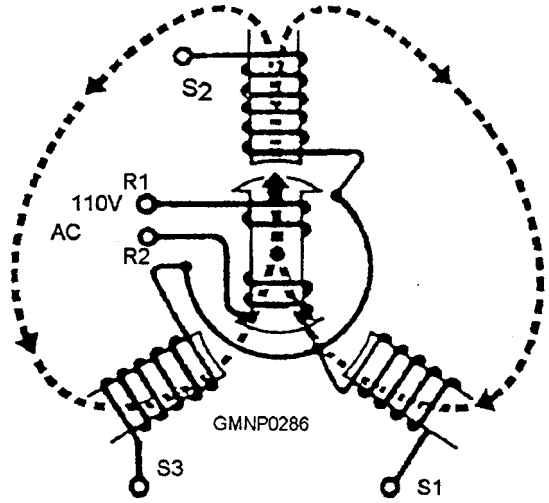

Figure 5-23.—Synchro primary magnetic field.

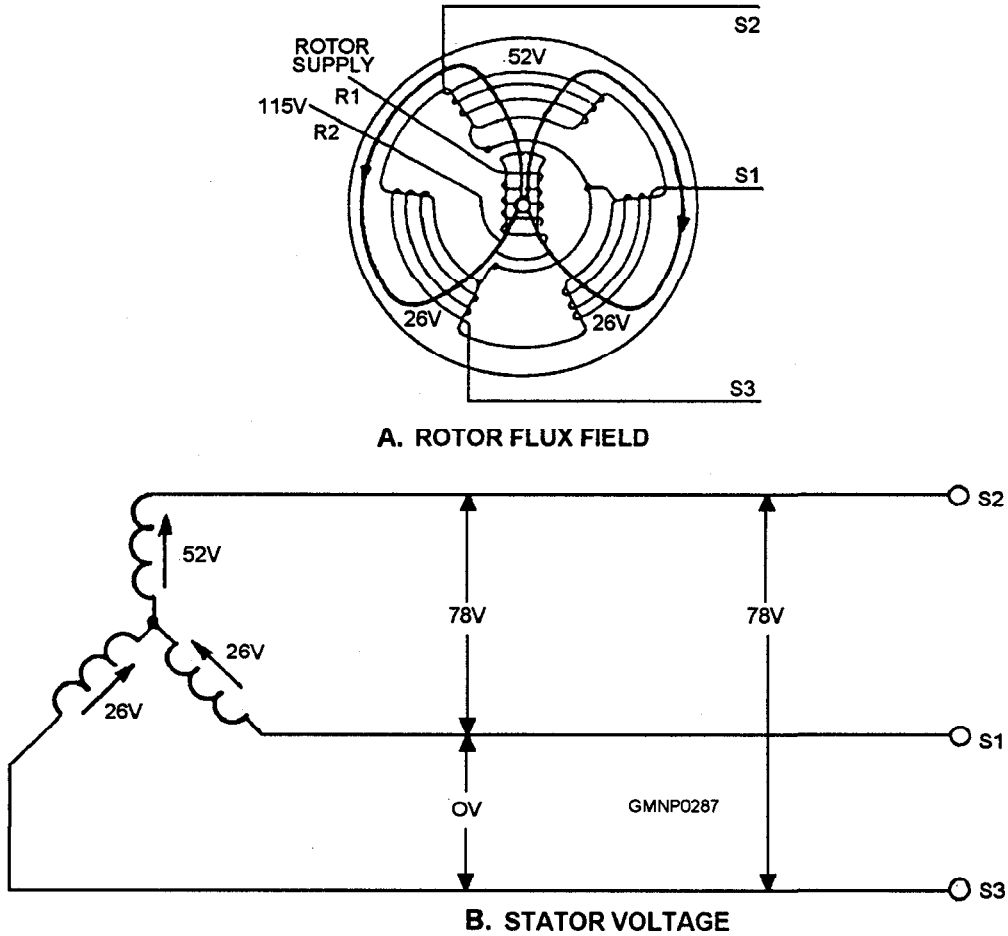

Figure 5-24.—Effective stator voltages.

energized by the ac source through another set of coils. The arrangement is shown in figure 5-23.

The pivoted electromagnet will react in the same manner as the bar magnet did when dc voltage was applied. The pivoted electromagnet will assume a position that depends upon the magnetic field established by the stator coils.

If the 115 VAC is applied to the rotor, at a given instant the flux takes the directions shown by the arrows in figure 5-24. Both flux loops cut the S2 winding, but only one cuts the S1 and S3 windings. If a voltmeter could be placed directly across the S2 winding, it would indicate 52 volts; across the S1 and S3 windings, it would indicate 26 volts.

The coils of the stator are Y-connected (shown upside down in these illustrations). The stem of the Y is one coil and the branches of the Y are two other coils. They have a common connection, but no lead is brought out from this point.

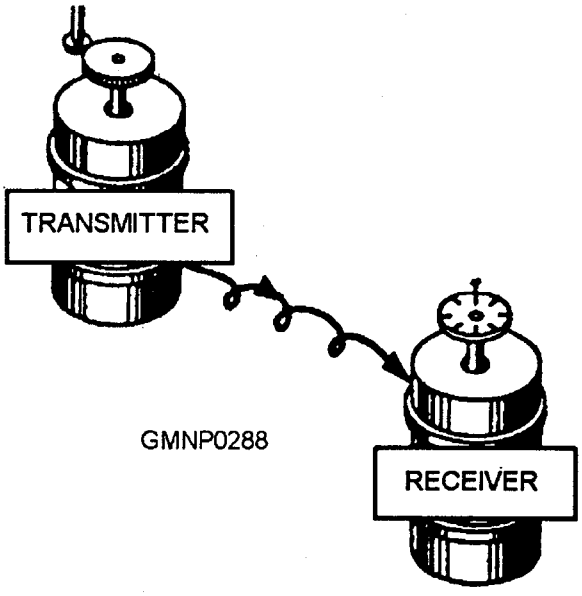

Figure 5-25.—Torque synchros used to position a dial.

SYNCHRO SYSTEM

Torque synchro transmitters and receivers are used often in ordnance equipment to transmit information electrically from one point to another. The synchro transmitter sends out the signal and the synchro receiver receives it.

These synchros are connected in such a way that any amount of rotation of the transmitter rotor causes the rotor of the receiver to turn the same amount. The receiver either indicates the value of the signal by turning a dial, as shown in figure 5-25, or positions a light mechanical load, such as the valves shown in figure 5-26.

If it is desired that a director control a gun or GMLS by use of a torque synchro system, the transmitter rotor will be geared to the director so that when the director is moved, the rotor of the transmitter is also moved. An electrical signal representing the amount of rotation of the transmitter rotor is transmitted over wires to a synchro receiver located at the mount or launcher. This signal causes the rotor of the synchro receiver to turn, or attempt to turn, the same amount that the transmitter rotor has turned. If the synchro receiver is connected to a power drive through a servo system, as shown in figure 5-27, it will control the drive and thereby cause the gun to turn the same amount as the director.

In synchro transmission, any movement of the rotor in the torque synchro transmitter produces a corresponding movement of the rotor in the torque synchro receiver. The position of the rotor of a synchro receiver always conforms to the position of the rotor in a synchro transmitter.

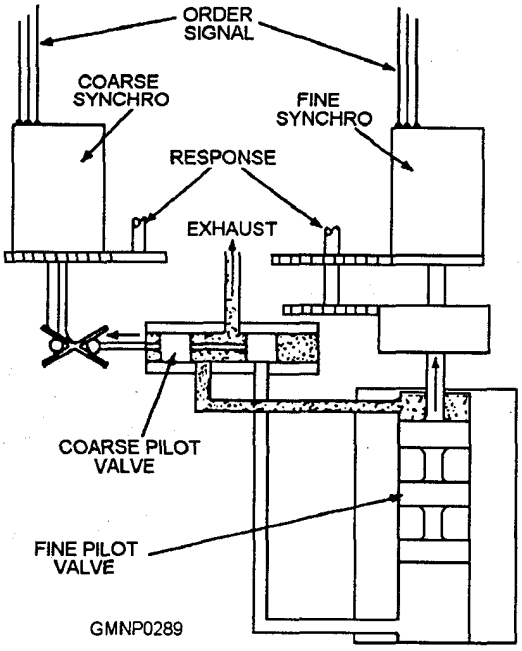

Figure 5-26.—Torque synchros used to move valves.

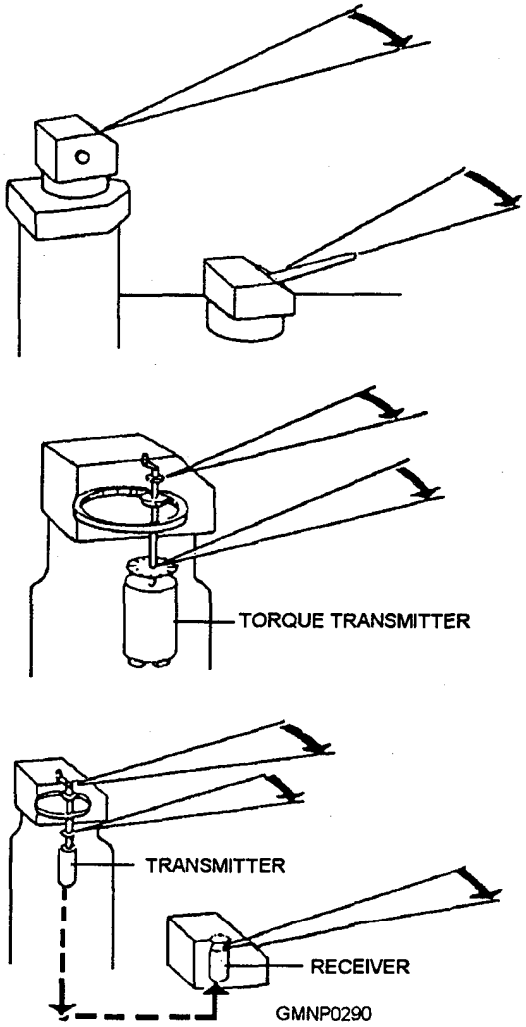

Figure 5-27.—Basic synchro system.

If reversing the direction of rotation of a receiver becomes necessary, interchange stator leads S1 and S3; S2 represents electrical zero. Changing the S2 lead would introduce an error of 120 degrees.

ELECTRICAL ZERO

If synchros are to work together properly in a system, it is essential that they be correctly connected and slimed in remeet to each other and to the other devices, such as directors and guns, with which they are used. Needless to say, the best of ordnance equipment would be ineffective if the synchros in the data transmission circuits were misaligned electrically or mechanically. Since synchros are the heart of the transmission systems, it only stands to reason that they must be properly connected and aligned before any satisfactory shooting can be expected.

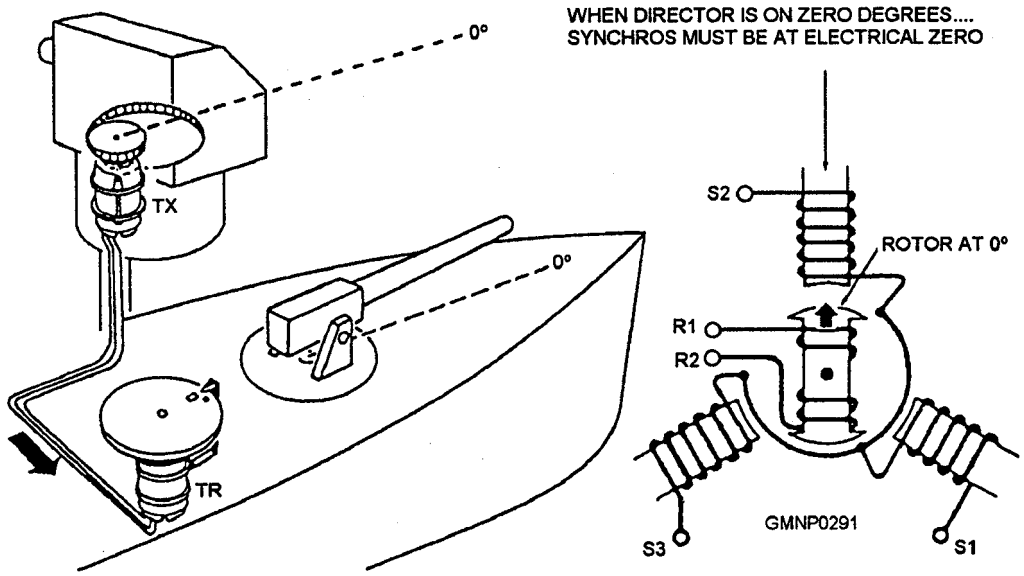

Figure 5-28.—System zero.

Electrical zero is the reference point for alignment of all synchro units. The mechanical reference point for the units connected to the synchros depends upon the particular application of the synchro system. As **a** GM on board ship, your primary concern with the mechanical reference point will be the centerline of the ship for gun train and the standard reference plane for gun elevation. Remember that whatever the system, the electrical and mechanical reference points must be aligned with each other.

Atypical example of proper alignment is a TX-TR synchro team coupled to a gun director, so adjusted that the gun position can be read on the TR dial. The gun director is at zero when the gun points directly toward the bow of the ship (fig. 5-28). A TX is coupled mechanically to the director, and a TR is connected electrically to the TX. If this system were setup without paying any attention to the position of the TX rotor, it would indicate the gun position accurately if the TR dial were set on zero when the gun director read zero. If the same synchros remained in the same system, it would not be necessary to position them more accurately. Sometimes TRs and TXs become defective and must be replaced. If another TX were put into this system without checking the TR dial, its rotor probably would be positioned differently from that of the original TX. The TR would follow the new TX, and the TR dial would read incorrect y. To overcome this difficulty, **a** zero degree point is needed, which is standard for all synchros. In the preceding example of the gun director, the system first should have been aligned so that all synchro rotors were at electrical zero, and all dials read zero when the gun director was on zero degrees. Then, any synchro could be replaced, without introducing error into the system, by installing the new synchro with its rotor on electrical zero when the gun director was on zero degrees. The electrical zero provides **a** standard way of aligning synchro units when they are connected together in a synchro system.

There are two ways this alignment can be accomplished. The most difficult way is to have two GMs, one at the transmitter and one at the receiver or control transformer, adjust the synchros while talking over sound-powered telephones or some other communication device. The better way is to align all the synchros to electrical zero. Units may be zeroed individual y and only one GM is required to do the work. Another advantage of using electrical zero is that trouble in the system always shows up in the same way. For example, in a properly zeroed TX-TR system, a short circuit from S2 to S3 causes all receiver dials to stop at 60 degrees or 240 degrees.

In summary, zeroing a synchro means adjusting it mechanically so that it will work properly in a system where all other synchros are zeroed. This mechanical adjustment is accomplished normally by physically turning the synchro rotor or stator.

MAINTAINING AND TROUBLESHOOTING SYNCHRO SYSTEMS

One of the duties aboard ship will be **to** keep the synchro systems used in ordnance equipment in good working order. Therefore, Gms must be familiar with the do's and don'ts of synchro maintenance and repair.

The following is a list of don'ts:

- Do not attempt to zero a synchro system that is already accurately zeroed because of a desire for practice. Quite often this unnecessary practice results in misalignments.

- Do not attempt to take a synchro apart, even if it is defective. A synchro is a piece of precision equipment that requires special equipment and techniques for disassembly. If the synchro is faulty, return it to the supply department if they require it for turn-in and draw a replacement.

- Never attempt to lubricate a synchro. A synchro, unlike an electric motor, does not require periodic lubrication.

- Never force a synchro into place, drill holes into its frame, use pliers on the threaded shaft, or use force to mount a gear or dial on the shaft.

Signal lights indicate either overload conditions or blown fuses. An overload indicator is actuated by excess current flowing in the stator windings. In one form of indicator, a neon lamp is connected to the stator leads by means of two transformers. The primary, consisting of a few turns of heavy wire, is in series with two of the stator leads; and the secondary, consisting of many turns of fine wire, is in series with the lamp. The turn ratio is such that when excess current flows through the stator windings, the neon lamplights. For example, when the difference in rotor positions exceeds approximately 18 degrees, the lamp lights, indicating that the load on the receive shaft is excessive.

Fuse indicators are panel lights that glow when a fuse in the rotor circuit blows. If excessive current flows in the rotor windings due to a short circuit or excessive mechanical overload, one of the fuses will glow and the neon lamp across that fuse will light. Another type of blown fuse indicator uses a small transformer with two identical primaries and a secondary. With both fuses closed, equal currents flow through the primaries that induce mutually canceling voltage in the secondary. If a fuse blows, the induced voltage from one primary is present in the secondary and the lamp lights.

Synchro maintenance and troubleshooting is a very complex undertaking in modern ordnance equipment, and skilled personnel with ordnance rates work jointly to maintain the synchro systems in a high degree of readiness. The Navy *Handbook*, MIL-HDBK-225 (AS), is devoted to synchro troubles and should be used during analysis of synchro system casualties. The tables contained in this publication are useful tools for learning the many problems that may exist in synchro systems.

If the casualty exists in the transmitter, all receivers will be affected. If the casualty exists in a receiver, only that receiver will be affected, except in the case of shorted stator leads, when all synchros will be affected.

A list of synchro casualties and effects on a typical synchro system follows:

1. S1 and S3 shorted-rotor locks on 0 degrees or 180 degrees.
2. S1 and S2 shorted-rotor locks on 120 degrees or 300 degrees.
3. S2 and S3 shorted—rotor locks on 240 degrees or 060 degrees.
4. S1, S2, and S3 shorted—rotor spins.
5. R1 or R2 shorted-rotor aligns as 090 degrees or 270 degrees from the signal; fuse blows.
6. R1 or R2 open-rotor aligns at 0 degrees or 180 degrees; proper rotation, poor torque.
7. S1 open—rotor oscillates over S1 or 180 degrees from S1.
8. S2 open—rotor oscillates over S2 or 180 degrees from S2.
9. S3 open—rotor oscillates over S3 or 180 degrees from S3.
10. R1 and R2 reversed—rotor aligns 180 degrees from signal; proper rotation, good torque.
11. S1 and S2 reversed—rotor aligns at 120 degrees from signal; reversed rotation, good torque.
12. S2 and S3 reversed—rotor aligns at 240 degrees from signal; reversed rotation, good torque.
13. S1 and S3 reversed—rotor aligns at 0 degrees; reversed rotation, good torque.

Synchro units require careful handling at all times. For more information on synchros, refer to the Navy Electricity and Electronics Training Series (NEETS), Module 15, *Principles of Synchros, Servos, and Gyros*, NAVEDTRA 172-15-00-80.

CIRCUIT FAILURES

LEARNING OBJECTIVE: Recall general information concerning electrical and electronic system maintenance and repair.

The failure of a circuit to function properly usually is caused by a break in the circuit (open), a short circuit (a circuit that permits current to bypass a part of the circuit), or a grounded circuit (an undesired path of current).

Any of these faults affects the current and voltage values and causes the circuit to function improperly.

Open circuits may result from dirty or loose connections, improperly installed wire, mechanical damage, faulty installing or repair, and vibration. If connections are clean and tight, no resistance is added to the circuit.

Short circuits are low-resistance paths or shortcuts that cause the current to bypass the load. The current from the source passes through the short instead of the load, causing the load to function improperly. Most shorts are accidental. They occur when vibration wears away the insulation, when salt water gets into connection boxes, when heat melts away insulation, or when carelessness brings two conductors together.

A grounded circuit is one in which one side of the path is connected to ground either intentionally or accidentally. An intentionally grounded circuit uses a ground that is the hull of the ship, equipment chassis, and so forth, as one side of the line or one conductor. If the "hot side" conductor of a grounded source touches ground accidentally, a short circuit results. Power circuits in the Navy are not grounded and must be insulated from ground at all times. One side of this circuit may be grounded accidental y and no harm will result, but if both sides are grounded, a short circuit is the result. An ungrounded circuit has a safety feature. If anyone accidentally touches one side of an ungrounded circuit, there will be no path for current flow through the body to the other side of the source. This danger is one reason why power circuits in the Navy are insulated from ground.

TYPES OF CIRCUIT CHECKS

There are three basic circuit checks used to locate shorts, grounds, and open circuits within electric and electronic equipment: (1) voltage (volt) checks, (2) current (amperes) checks, and (3) resistance (ohms) checks.

Voltage checks reveal the amount of potential force present to move electrons in a circuit.

Current checks show the actual amount of current flowing through the circuit.

Resistance checks tell the resistance characteristics of the circuit; that is, how much opposition the circuit offers to the flow of current.

With the proper use of test equipment, failures in electric and electronic circuits can be detected and isolated to specific components by using one of these three checks.

Since volts, amperes, and ohms are units of electrical measure (Ohm's law is explained in NEETS, Module 1), some measuring device must be used to measure them. One device used for this purpose is the multimeter. The Simpson AN/PSM-4A and 260 series are the most commonly used types of multimeters. The specific operating procedures for these meters are contained in the manufacturer's manual. Multimeters and other test equipment are also covered in NEETS, Module 16, *Introduction to Test Equipment*, NAVEDTRA 172-16-00-84.

GROUND DETECTION INDICATOR

Another type of current measuring device you should be familiar with is the ground detection indicator. A ground detection indicator is a continuous monitoring system designed to detect a first ground. Because the power distribution and control circuits are powered by ungrounded currents, the first ground will not always cause a malfunction. However, if the first ground is not discovered and a second develops, the result could be an illogical and destructive sequence of gun mount operation. The reason for this action is that the two grounds act as an electrical conductor between the grounded components. A ground detection indicator will produce audio and visual indications if a gun system develops a short or ground.

For example, if a ground were to occur in the 5"/54 automatic loading system and it was not corrected, perhaps nothing would happen. Operations might be normal. If a second ground develops, however, and some safety interlocks are energized due to the grounded circuit, the equipment could be damaged and personnel might be injured. The elimination of grounds and potential grounds is preventive maintenance and the responsibility of the GM.

When the ground detector indicator indicates that some part of the gun system is grounded, the GM must determine the location and cause of the ground by using a multimeter. Ground detection indicators are being installed on all new gun and missile systems.

MK 75 GUN MOUNT CONTROL SYSTEM

LEARNING OBJECTIVE: Recall general information concerning the Mk 75 gun mount control system.

The Mk 75 gun mount control system consists of the equipment used to distribute power to the gun-loading and gun-laying systems. It includes equipment required to activate, control, monitor, and test gun mount operations, and equipment required to prevent excessive gun barrel temperatures during firing operations. The gun mount control system also includes equipment required to prevent ice from forming on the gun port shield and the roller path assembly during cold weather operations.

This section will cover only a general description of the Mk 75 gun mount control system. For a more detailed and in-depth description, refer to the *Technical Manual for 76-mm 62-Caliber Gun Mount Mark 75 Mods 0 and 1,* SW314-AO-MMM-A10/GM MK75 0-1 series.

GUN CONTROL PANEL (GCP)

The gun control panel (GCP) (fig. 5-29 and table 5-3), located in the ammunition handling room, provides the intermediate link between the fire control system (FCS) and the gun mount. The GCP includes solid-state plug-in modules that contain the electronic control circuits for the gun mount systems. The GCP also includes transformers, circuit breakers, indicating lamps, control switches, train and elevation position dials, and the train and elevation toggle switches.

Transformers convert ships power to the voltages needed for gun mount electrical and electronic systems and components. Circuit breakers permit the distribution of this power to the hydraulic power unit, the servo system, and the other gun mount electrical systems. Indicating lamps provide visual indications of the gun status and permit the GCP operator to monitor" gun mount systems.

Control switches permit local control of the gun systems for maintenance and test purposes. Control switches also enable the GCP operator to load ammunition to the last station loader drum. The train and elevation position dials permit these positions to be monitored from the GCP. Train and elevation toggle

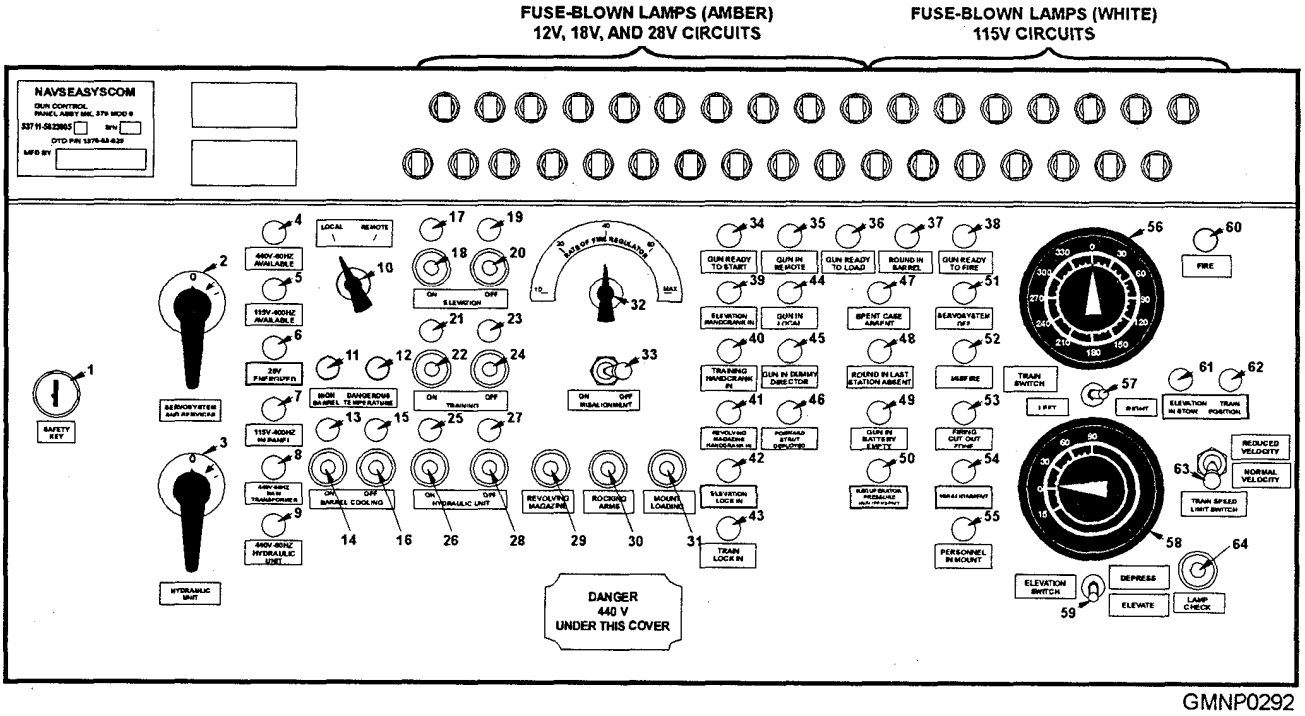

Figure 5-29.—Gun control panel.

Table 5-3.—GCP: Controls and Indicators

Item on figure 5-29	Panel nomenclature	Designation	Description	Position/ indication	Function
1	SAFETY KEY	- - -	- - -	- - -	Locks SERVO SYSTEM AND SERVICES and HYDRAULIC UNIT circuit breakers to prevent unauthorized activation of the gun mount
2	SERVO SYSTEM AND SERVICES	CB1	Circuit breaker	O	Disconnects 440-VAC power from distribution circuits
				I	Connects 440-VAC power to distribution circuits
3	HYDRAULIC UNIT	CB2	Circuit breaker	O	Disconnects 440-VAC power from hydraulic unit
				I	Connects 440-VAC power to hydraulic unit
4	440V 60 HZ AVAILABLE (Mod 0) or 440V 400 HZ AVAILABLE (Mod 1)	DS24 (white)	Indicating lamp	On	Indicates 440-VAC power (60-Hz for Mod 0 or 400-Hz for Mod 1) available at GCP
5	115V 400 HZ AVAILABLE	DS25	Indicating lamp (white)	On	Indicates 115-VAC 400-Hz power available at GCP
6	28V ENERGIZED	DS26	Indicating lamp (white)	On	Indicates +28-VDC power supply energized
7	115V 400 HZ IN PANEL	DS27	Indicating lamp (white)	On	Indicates 115-VAC 400-Hz power distribution circuits energized
8	440V 60 HZ MAIN TRANSFORMER (Mod 0) or 440V 400 HZ MAIN TRANSFORMER (Mod 1)	DS28	Indicating lamp (white)	On	Indicates main transformer energized
9	440V 60 HZ HYDRAULIC UNIT (Mod 0) or 440V 400 HZ HYDRAULIC UNIT (Mod 1)	DS29	Indicating lamp (white)	On	Indicates 440-VAC power (60-Hz for Mod 0 or 400-Hz for Mod 1) available for operation of hydraulic power unit motor
10	LOCAL/ REMOTE	S1	Two-position rotary selector switch	LOCAL	Connects control of gun mount to GCP
				REMOTE	Connects control of gun mount loading system, firing, gun laying, and barrel cooling to FCS

Table 5-3.—GCP: Controls and Indicators—Continued

Item on figure 5-29	Panel nomenclature	Designation	Description	Position/ indication	Function
11	BARREL TEMPERATURE—HIGH	DS38	Indicating lamp (yellow)	On	Indicates barrel temperature is 150 to 250°C
12	BARREL TEMPERATURE—DANGEROUS	DS39	Indicating lamp (red)	On	Indicates barrel temperature over 250°C
13	BARREL COOLING—ON	DS15	Indicating lamp (green)	On	Indicates barrel cooling system in operation
14	BARREL COOLING—ON	P7	Push-button switch	Pressed	Activates barrel cooling system
15	BARREL COOLING—OFF	DS14	Indicating lamp (red)	On	Indicates barrel cooling system not in operation
16	BARREL COOLING—OFF	P8	Push-button switch	Pressed	Deactivates barrel cooling system
17	ELEVATION—ON	DS20	Indicating lamp (green)	On	Indicates elevation servo system in operation
18	ELEVATION—ON	P1	Push-button switch	Pressed	Activates elevation servo system
19	ELEVATION—OFF	DS19	Indicating lamp (red)	On	Indicates elevation servo system not in operation
20	ELEVATION—OFF	P2	Push-button switch	Pressed	Deactivates elevation servo system
21	TRAINING—ON	DS22	Indicating lamp (green)	On	Indicates train servo system in operation
22	TRAINING—ON	P3	Push-button switch	Pressed	Activates train servo system
23	TRAINING—OFF	DS21	Indicating lamp (red)	On	Indicates train servo system not in operation
24	TRAINING—OFF	P4	Push-button switch	Pressed	Deactivates train servo system
25	HYDRAULIC UNIT—ON	DS6	Indicating lamp (green)	On	Indicates hydraulic power unit in operation
26	HYDRAULIC UNIT—ON	P5	Push-button switch	Pressed	Activates hydraulic power unit
27	HYDRAULIC UNIT—OFF	DS5	Indicating lamp (red)	On	Indicates hydraulic power unit not in operation
28	HYDRAULIC UNIT—OFF	P6	Push-button switch	Pressed	Deactivates hydraulic power unit
29	REVOLVING MAGAZINE	P11	Push-button switch (spring-returns to deactivated position	Pressed	Starts and maintains operation of revolving magazine, hoist, and screw feeder
				Released	Stops operation of revolving magazine, hoist, and screw feeder

Table 5-3.—GCP: Controls and Indicators—Continued

Item on figure 5-29	Panel nomenclature	Designation	Description	Position/ indication	Function
30	ROCKING ARMS	P9	Push-button switch (spring-returns to deactivated position)	Pressed	Starts and maintains operation of rocking arms and loader drum
				Released	Stops operation of rocking arms and loader drum
31	MOUNT LOADING	P10	Push-button switch (spring-returns to deactivated position)	Pressed	Starts and maintains operation of revolving magazine, hoist, screw feeder, rocking arms, and loader drum
				Released	Stops operation of revolving magazine, hoist, screw feeder, rocking arms, and loader drum
32	RATE OF FIRE REGULATOR	S4	Five-position rotary selector switch	10	Selects rate of fire at 10 rounds per minute
				20	Selects rate of fire at 20 rounds per minute
				40	Selects rate of fire at 40 rounds per minute
				60	Selects rate of fire at 60 rounds per minute
				MAX	Selects maximum rate of fire
33	MISALIGN-MENT	S2	Two-position toggle switch	ON	Allows firing circuit to be completed if gun mount is not within 25 minutes of the position ordered by FCS
				OFF	Prevents firing circuit from being completed if the gun mount is not within 25 minutes of the position ordered by FCS NOTE When gun is firing under control of FCS Mark 92, internal connections render the MISALIGNMENT switch nonfunctional
34	GUN READY TO START	DS8	Indicating lamp (green)	On	Indicates gun mount ready for operation
35	GUN IN REMOTE	DS1	Indicating lamp (green)	On	Indicates gun mount under control of FCS

Table 5-3.—GCP: Controls and Indicators—Continued

Item on figure 5-29	Panel nomenclature	Designation	Description	Position/ indication	Function
36	GUN READY TO LOAD	DS2	Indicating lamp (green)	On	Indicates gun mount ready to load a round
				On and flashing	Indicates no round in last station loader drum
37	ROUND IN BARREL	DS3	Indicating lamp (green)	On	Indicates breechblock up and gun in battery
38	GUN READY TO FIRE	DS10	Indicating lamp (green)	On	Indicates gun ready to fire a round
				On and flashing	Indicates gun mount not aligned with FCS signal or in a nonfiring zone
39	ELEVATION HANDCRANK IN	DS30	Indicating lamp (red)	On	Indicates elevation handcrank engaged with power drive
40	TRAINING HANDCRANK IN	DS31	Indicating lamp (red)	On	Indicates train handcrank engaged with power drive
41	REVOLVING MAGAZINE HANDCRANK IN	DS32	Indicating lamp (red)	On	Indicates revolving magazine handcrank engaged with power drive
42	ELEVATION LOCK IN	DS33	Indicating lamp (red)	On	Indicates elevation securing mechanism engaged
43	TRAIN LOCK IN	DS34	Indicating lamp (red)	On	Indicates train securing pin engaged
44	GUN IN LOCAL	DS16	Indicating lamp (red)	On	Indicates control of gun mount at GCP
45	GUN IN DUMMY DIRECTOR	DS7	Indicating lamp (red)	On	Indicates control of train and elevation of the gun mount by dummy director
46	FORWARD STRUT DEPLOYED (Mod 1 only)	DS41	Indicating lamp (red)	On	Indicates forward strut of hydrofoil deployed and firing zones modified
47	SPENT CASE ABSENT	DS35	Indicating lamp (red)	On	Indicates no empty case in empty case tray
48	ROUND IN LAST STATION ABSENT	DS36	Indicating lamp (red)	On	Indicates no round in last station loader drum
49	GUN IN BATTERY EMPTY	DS37	Indicating lamp (red)	On	Indicates gun in battery but breechblock open
50	RECUPERATOR PRESSURE INSUFFICIENT	DS40	Indicating lamp (red)	On	Indicates recuperator pressure below 72 (±2) kg/cm^2

Table 5-3.—GCP: Controls and Indicators—Continued

Item on figure 5-29	Panel nomenclature	Designation	Description	Position/ indication	Function
51	SERVO SYSTEM OFF	DS23	Indicating lamp (red)	On	Indicates either or both train and elevation servo systems not in operation
52	MISFIRE	DS9	Indicating lamp (red)	On	Indicates breechblock up, gun in battery, and firing pin released
53	FIRING CUT-OUT ZONE	DS17	Indicating lamp (red)	On	Indicates barrel pointing into a nonfiring zone
54	MISALIGN-MENT	DS18	Indicating lamp (red)	On	Indicates gun mount not aligned within 25 minutes of ordered position
55	PERSONNEL IN MOUNT	DS13	Indicating lamp (yellow)	On	Indicates personnel inside weather shield of gun mount have actuated switch 4S3
56	- - -	TB1	Train position indicator dial	0 to 360 degrees	Indicates position of gun mount in train
57	TRAIN SWTICH	S3	Three-position toggle switch	LEFT	Trains gun mount to the left in local control
				Center	Off
				RIGHT	Trains gun mount to the right in local control
58	- - -	TB2	Elevation position indicator dial	-15 to +90 degrees	Indicates position of barrel in elevation
59	ELEVATION SWITCH	S6	Three-position toggle switch	DEPRESS	Depresses barrel in local control
				Center	Off
				ELEVATE	Elevates barrel in local control
60	FIRE	DS4	Indicating lamp (red)	On	Indicates firing circuit complete
61	ELEVATION—IN STOW POSITION	DS12	Indicating lamp (green)	On	Indicates barrel at elevation stow position
62	TRAIN—IN STOW POSITION	DS11	Indicating lamp (green)	On	Indicates gun mount at train stow position
63	TRAIN SPEED LIMIT SWITCH	S5	Two-position toggle switch	REDUCED VELOCITY	Reduces train speed to 26 degrees per second (maximum) when in remote control/dummy director
				NORMAL VELOCITY	Keeps train speed at normal velocity in remote control
64	LAMP CHECK	PX	Push-button switch	Pressed	Turns on indicating lamps on face of GCP, except for DS24, DS25, DS26, DS27, DS28, DS29 (and DS41 on Mod 1)

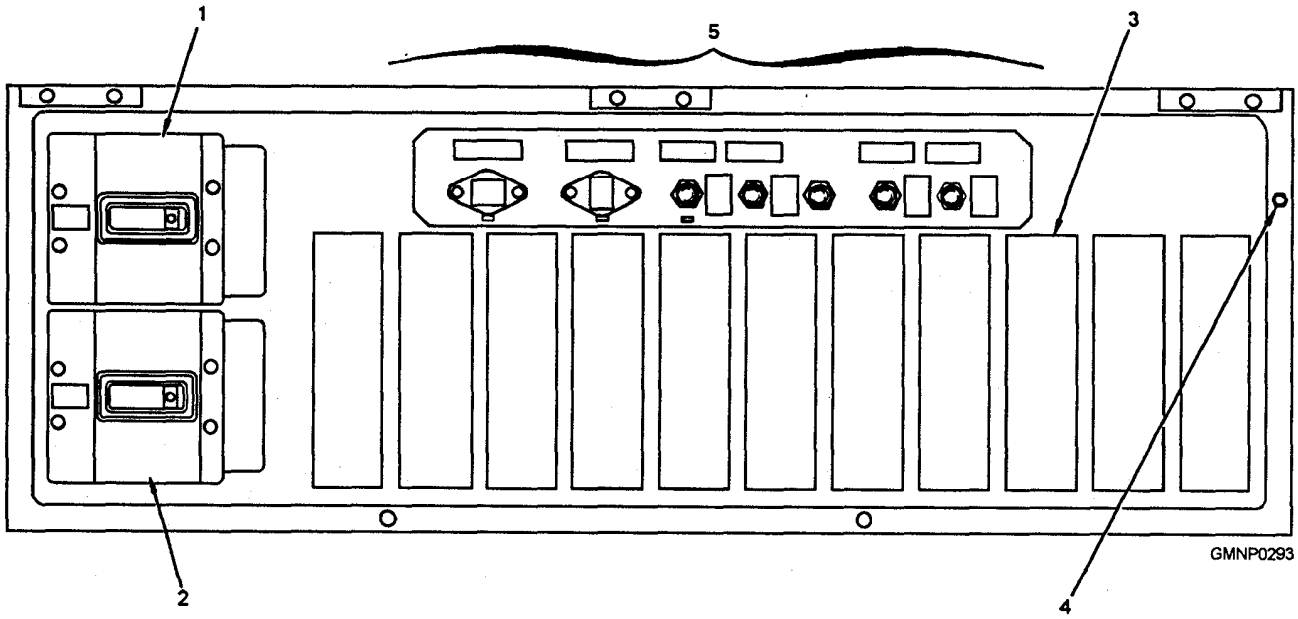

Figure 5-30.—Inside top cover of GCP.

switches permit local control of the train and elevation systems (at low speed only).

When the gun mount is operated in remote control, the GCP receives control inputs directly from FCS. When the gun mount is operated in the remote mode, the GCP is normally used to monitor system functions and gun status.

The equipment of the GCP is organized into compartments. Each compartment permits ready accessibility for maintenance and testing. An interlock switch under each compartment cover opens the GCP circuit breakers when the cover is removed. The following locations provide access to equipment and test points at the GCP

1. Inside top cover
2. Inside top compartment
3. Inside bottom compartment
4. Right side
5. Left side

Inside Top Cover

The top cover of the GCP is hinged in the back and secured in the front with cap screws. With the top cover open (fig. 5-30), access is provided to the components listed in table 5-4.

Table 54.—Inside Top Cover of GCP

Item on figure 5-30	Designation	Nomenclature	Description/function
1	CB1	SERVO SYSTEM AND SERVICES circuit breaker	Provides 440-VAC 3-phase power to GCP circuitry when positioned to I; de-energizes 440-VAC 3-phase power when positioned to 0
2	CB2	HYDRAULIC UNIT circuit breaker	Provides 440-VAC 3-phase power to GCP circuitry when positioned to I; de-energizes 440-VAC 3-phase power when positioned to 0
3	TB1 through TB11	Terminal boards	Provide connection points for GCP circuitry
4	I1	Control panel interlock switch	Trips SERVO SYSTEM AND SERVICES and HYDRAULIC UNIT circuit breakers when top cover is opened (provided BATTLE SHORT switch is positioned to NORMAL)
5	---	Switch and counter board assembly	Refer to table 5-12 GCP: Controls and Indicators (Top Cover Open)

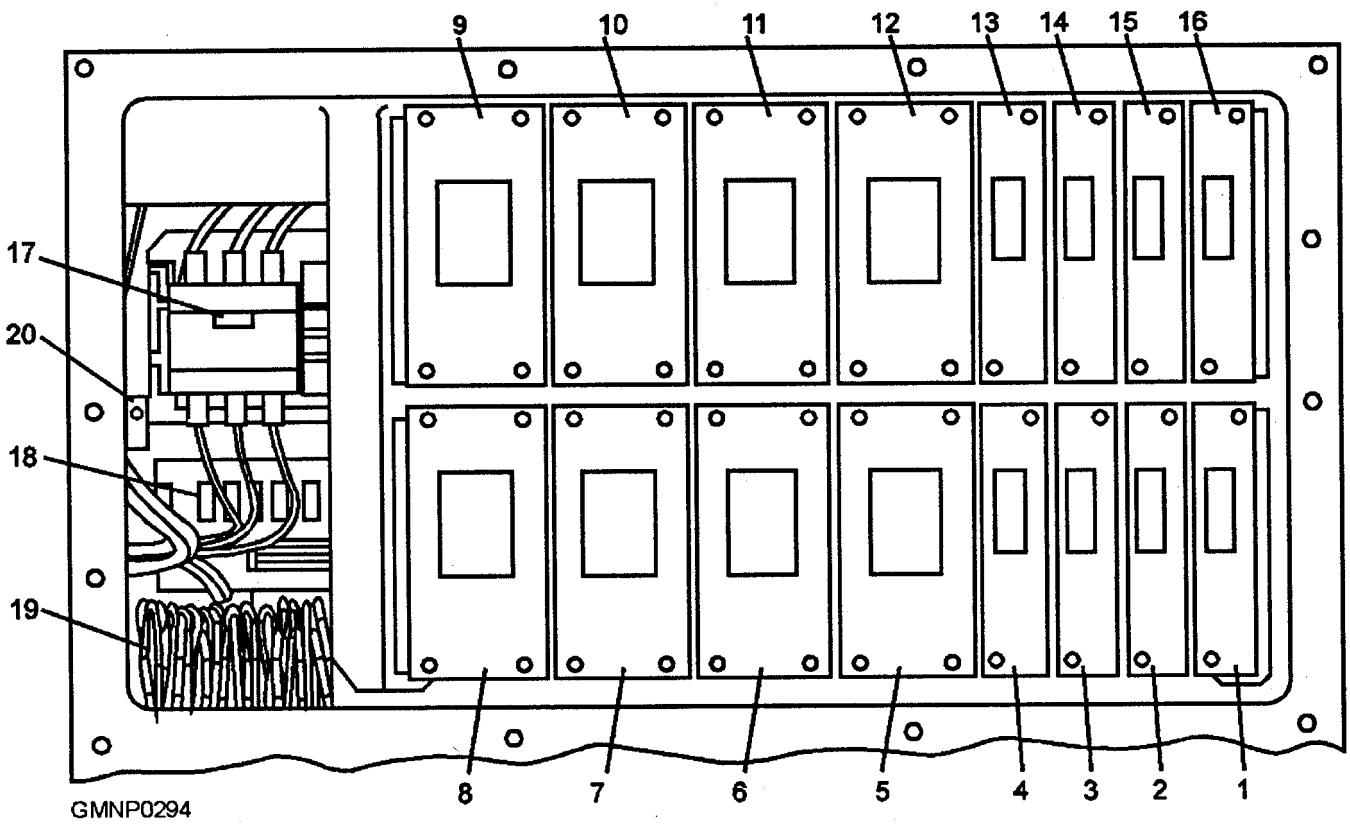

Figure 5-31.—Inside top compartment of GCP.

Inside Top Compartment

The top compartment of the GCP (fig. 5-31) is also protected by a cover plate secured with cap screws. With the cover removed, access is provided to the plug-in modules and components listed in table 5-5.

Table 5-5.—Inside Top Compartment of GCP

Item on figure 5-31	Designation	Nomenclature	Description/function
1	1J1	Power supply module	Provides +12- and -12-VDC power supplies, demodulator signals, stickoff voltage, and brake release and silicon-controlled rectifier (SCR) module oscillator start signals
2	1J2	Elevation amplifier module	Contains coarse and fine demodulator output circuits, changeover and time-delay circuits, upper and lower limit adjustment circuits, and elevation amplifier circuits
3	1J3	Train amplifier module	Contains coarse and fine demodulator output circuits, changeover and time-delay circuits, and train amplifier circuits
4	1J4	Signal ramp module	Contains ramp reference circuit, phase consent circuit, contouring circuit, and misalignment circuit; provides high and low nonpointing zone signals for train and elevation limit-stops
5	1J5	SCR module	Provides increasing and decreasing orders for elevation motor
6	1J6	SCR module	Provides increasing and decreasing orders for train motors
7	1J7	SCR module	Provides increasing and decreasing orders for elevation motor
8	1J8	SCR module	Provides increasing and decreasing orders for train motors
9	2J1	Relay and switch module	Contains firing and loading relays 1K1 through 1K7
10	2J2	Relay and switch module	Contains train and elevation start relays 2K1 through 2K12
11	2J3	Relay and switch module	Contains firing, barrel cooling, and hydraulic power unit start relays 3K1 through 3K12
12	2J4	Relay and switch module	Contains 400-Hz changeover relays 4K1 through 4K11
13	2J5	Relay and switch module	Contains synchro phase changeover relays 5K1 through 5K14
14	2J6	DC control module	Contains current driver circuits, rate of fire circuit, and logic circuit
15	2J7	Logic module	Contains loading and firing electronic logic circuits
16	2J8	Power supply module	Provides +18-VDC poewr supply for electronic logic circuits
17	K2	Hydraulic unit contactor	Energizes electric motor for hydraulic power unit
18	- - -	Filter board	Provides filtering for sawtooth transformer T2 circuits; contains capacitors C1 through C6 and resistors R1 through R6
19	TB12	Terminal board	Connects SCR outputs to train and elevation motors
20	I3	Control panel interlock switch	Trips SERVO SYSTEM AND SERVICES and HYDRAULIC UNIT circuit breakers when access cover is removed (provided BATTLE SHORT switch is positioned to NORMAL)

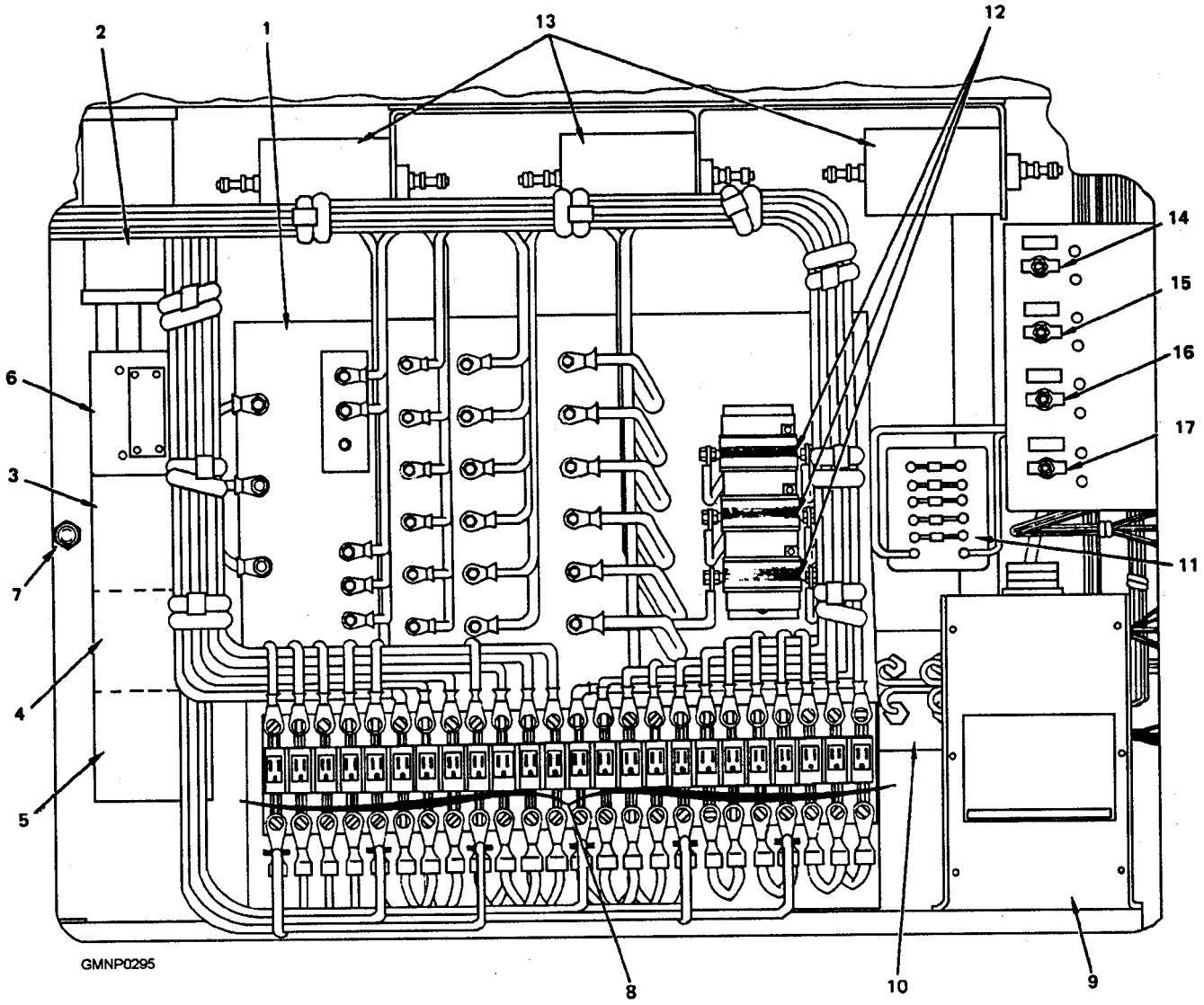

Figure 5-32.—Inside bottom compartment of GCP.

Inside Bottom Compartment

The bottom compartment of the GCP (fig. 5-32) is also protected by a cover plate secured with cap screws. With the cover removed, access is provided to the components listed in table 5-6.

Table 5-6.—Inside Bottom Compartment of GCP

Item on figure 5-32	Designation	Nomenclature	Description/function
1	T1	Main transformer	Supplies 170-VAC 6-phase, 115-VAC 3-phase, and 20-VAC 6-phase power for electric motors and most electrical systems of the gun mount
2	T2	Signal ramp (sawtooth) transformer	Provides 50-VAC 6-phase power for signal ramp and phase consent circuits in signal ramp module 1J4
3	T3	Indicator supply transformer	Provides 28-VAC power for: 1. 440V 60 HZ AVAILABLE lamp (Mod 0) or 440V 400 HZ AVAILABLE lamp (Mod 1) 2. Safety interlock circuit rectifier plate in GCP
4	T4	Indicator supply transformer	For Mod 0, provides 28-VAC power for 440V 60 HZ MAIN TRANSFORMER lamp or For Mod 1, provides 28-VAC power for 440V 400 HZ MAIN TRANSFORMER lamp
5	T5	Indicator supply transformer	For Mod 0, provides 28-VAC power for 440V 60 HZ HYDRAULIC UNIT lamp or For Mod 1, provides 28-VAC power for 440V 400 HZ HYDRAULIC UNIT lamp
6	T6	Indicator supply transformer	Provides 28-VAC power for 115V 400 HZ AVAILABLE and 115V 400 HZ IN PANEL lamps
7	I2	Control panel interlock switch	Trips SERVO SYSTEM AND SERVICES and HYDRAULIC UNIT circuit breakers when access cover is removed (provided BATTLE SHORT switch is positioned to NORMAL)
8	T1-F1 through T1-F24	Fuses	Provide circuit protection for 170-VAC supply from T1
9	MCL module	Motor Current Limiter (MCL) module	Prevents excessive current draw by train and elevation electric motors
10	D1 through D6	28-VDC rectifier boards (DK)	Rectify 20-VAC power from T1
11	D7 through D11	Rectifier boards (PR)	Rectify 28-VAC power from T3 for: 1. Interlock switches 2. 440V 60 HZ AVAILABLE lamp (Mod 0) or 440V 400 HZ AVAILABLE lamp (Mod 1)
12	R1 through R3	Motor feedback resistors	Provides current feedback from motors
13	FL1 through FL6	Filters	Remove stray frequencies (noise) from 170-VAC supply (FL4 through FL6 are directly behind FL1 through FL3)
14	CB3	Convenience outlet circuit breaker	Provides circuit protection for convenience outlet
15	CB4	Shield lighting circuit breaker	Provides circuit protection for gunhouse red and white lights
16	CB5*	28-VDC circuit breaker	Provides circuit protection for +28-VDC supply
17	CB6*	28-VDC circuit breaker	Provides circuit protection for +28-VDC supply

*CB5 and CB6 control 20-VAC (6-phase) power which is rectified to obtain +28 VDC.

Right Side

The right side of the GCP (fig. 5-33) contains 10 test points behind a protective plate, 10 connector jacks, and a ground connection. Table 5-7 is a list of the test points and connectors. Table 5-8 lists connector jack J12 test points.

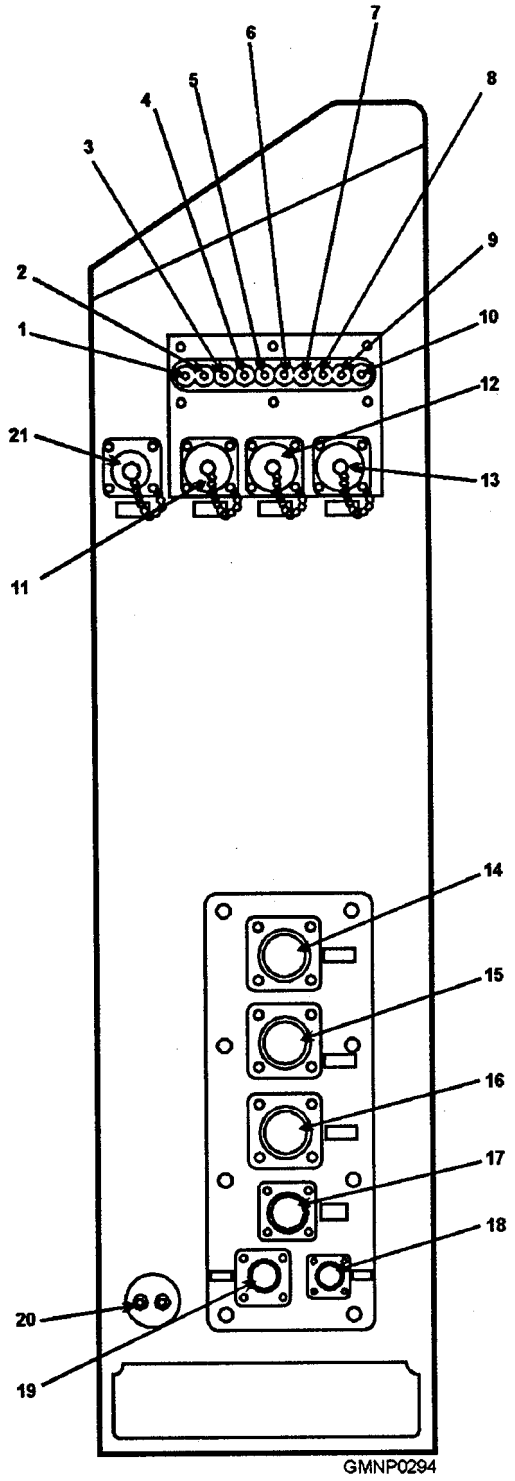

Figure 5-33.—Right side of GCP.

Table 5-8.—Connector Jack J12 Test Points

Connector test point pin	Function/circuit tested
J12-A	Firing pin released proximity switch 3A4
J12-B	Breechblock closed proximity switch 3A3
J12-C	Round at last station loader drum proximity switch 3A1
J12-E	Loader drum rotation complete proximity switch 3A5
J12-G	Spent case in tray proximity switch 3A6
J12-H	Loading tray up and empty proximity switch 3A2
J12-K	Gun on hooks proximity switch 3A7
J12-M	Right rocking arm down proximity switch 2A6
J12-O	Left rocking arm down proximity switch 2A7
J12-R	Round in transit screw feeder proximity switch 2A8
J12-T	Round in last station screw feeder proximity switch 2A9
J12-V	Screw feeder empty proximity switch 2A5
J12-X	Rocking arms electrovalve 2HP1 return
J12-Z	Raise right rocking arm solenoid 2HP1D
J12-b	Raise left rocking arm solenoid 2HP1S
J12-d	Revolving magazine and screw feeder electrovalve 2HP2 return
J12-f	Revolving magazine and screw feeder electrovalve 2HP2
J12-h	Firing solenoid 3HY1
J12-k	Firing solenoid 3HY1 return
J12-m	Misalignment circuit
J12-p	Misalignment circuit return
J12-r	Firing cutout circuit
J12-t	Firing cutout circuit return
J12-v	Proximity switch return

Table 5-7.—Right Side of GCP

Item on figure 5-33	Designation	Nomenclature	Function
1	COM	Test point	Provides common return for test purposes
2	FG	Test point	Provides function generator input for elevation frequency response test
3	36X	Test point	Provides 36X DC elevation error signal
4	TACH	Test point	Provides signal from elevation tachometer
5	1X	Test point	Provides 1X DC elevation error signal
6	FG	Test point	Provides function generator input for train frequency response test
7	36X	Test point	Provides 36X DC train error signal
8	TACH	Test point	Provides signal from train tachometer
9	1X	Test point	Provides 1X DC train error signal
10	COM	Test point	Provides common return for test purposes
11	J12	Connector jack	Provides test jack for proximity switches, solenoid units, misalignment circuit, and firing cutout circuit (refer to table 5-8)
12	J11	Connector jack	Provides input for elevation dummy director
13	J10	Connector jack	Provides input for train dummy director
14	J18	Connector jack	Provides connection for cable W010
15	J7	Connector jack	Provides connection for cable W007
16	J8	Connector jack	Provides connection for cable W008
17	J2	Connector jack	Provides connection for cable W002
18	J13	Connector jack	Provides connection for cable W013
19	J14	Connector jack	Provides connection for cable W014
20	- - -	Ground strap connection boss	Provides chassis ground
21	J301	Connector jack	Provides connections for sound-powered telephone lines into gunhouse

Left Side

For the Mod 0, the left side of the GCP (fig. 5-34) contains nine connector jacks-the Mod 1 contains 12 connector jacks. Table 5-9 lists the connectors for Mod 0 and Mod 1.

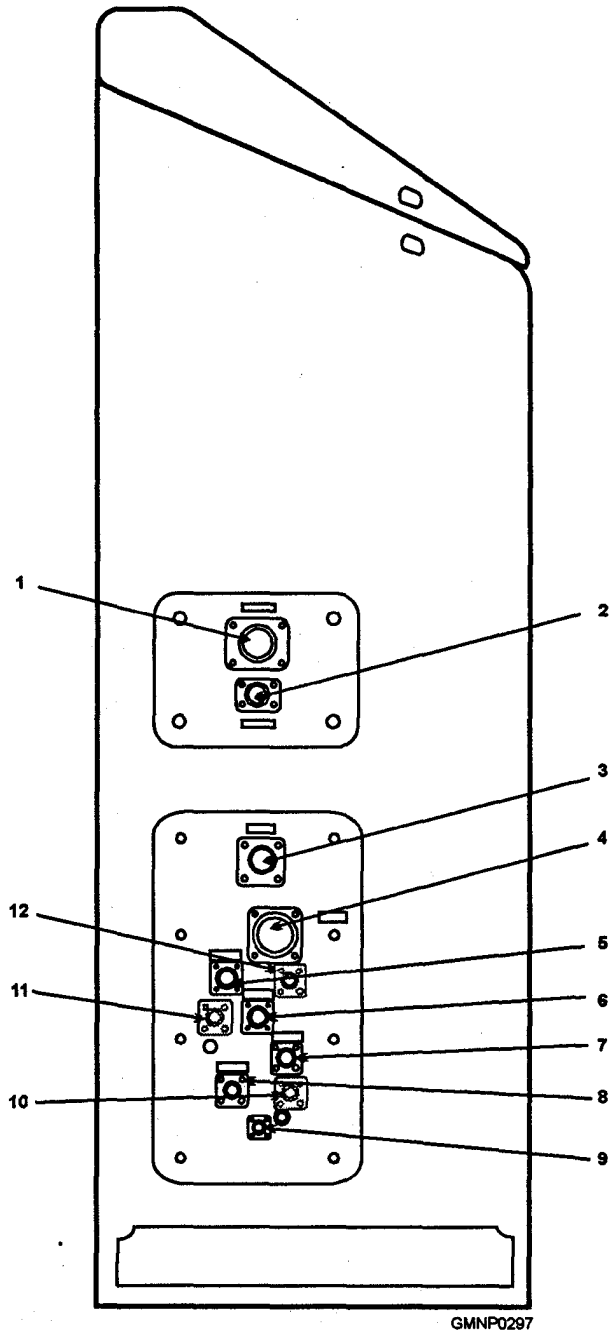

Figure 5-34.—Left side of GCP.

Table 5-9.—Left Side of GCP

Item on figure 5-34	Designation	Nomenclature	Function
1	J1	Connector jack	Provides connection for cable W001
2	J9	Connector jack	Provides connection for cable W009
3	J3	Connector jack	Provides connection for cable W003
4	J6	Connector jack	Provides connection for cable W006
5	J22	Connector jack	Provides connection for cable W086
6	J5	Connector jack	Provides connection for cable W005
7	J21	Connector jack	Provides connection for cable W019
8	J20	Connector jack	Provides connection for cable W088
9	J19	Connector jack	Provides connection for cable W087
10	J300	Connector jack	Provides connection for cable W300 (Mod 1 only)
11	J16	Connector jack	Provides connection for cable W016 (Mod 1 only)
12	J15	Connector jack	Spare (Mod 1 only)

CONTROL SYSTEM COMPONENTS

The control system commonly uses the components shown in figures 5-35 through 5-43. Table 5-10 provides a brief description of the components and gives their function in the control system. The designations of some components contain number codes which indicate their general location. For

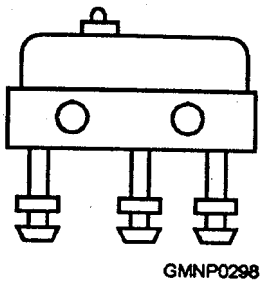

Figure 5-35.—Microswitch.

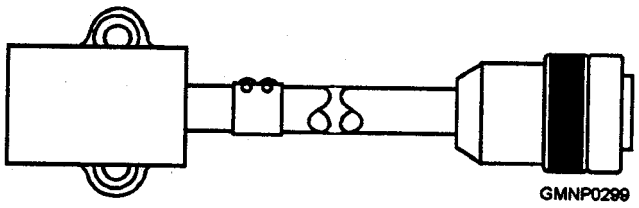

Figure 5-36.—Proximity switch.

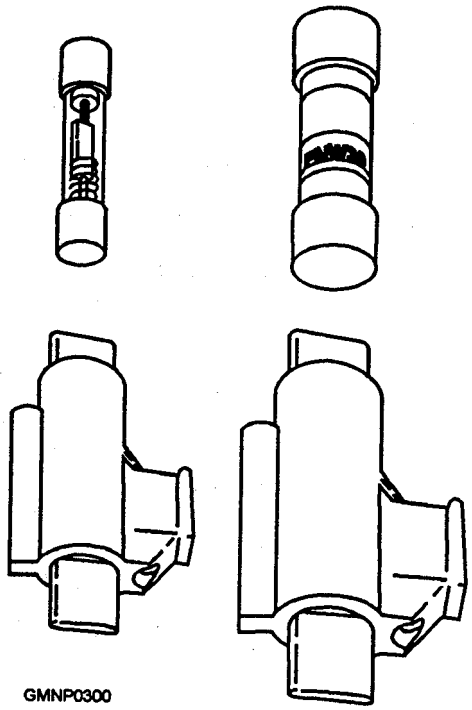

Figure 5-37.—Fuses.

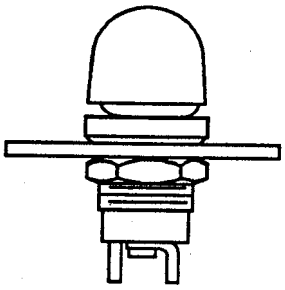

Figure 5-38.—Indicating lamp.

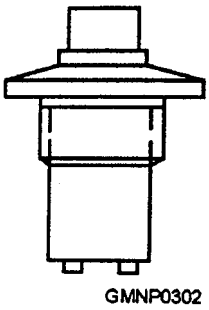

Figure 5-39.—Push-button switch.

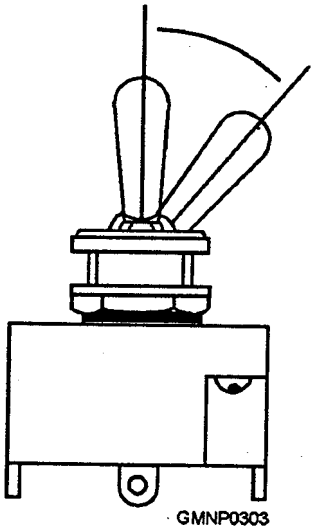

Figure 5-40.—Toggle switch.

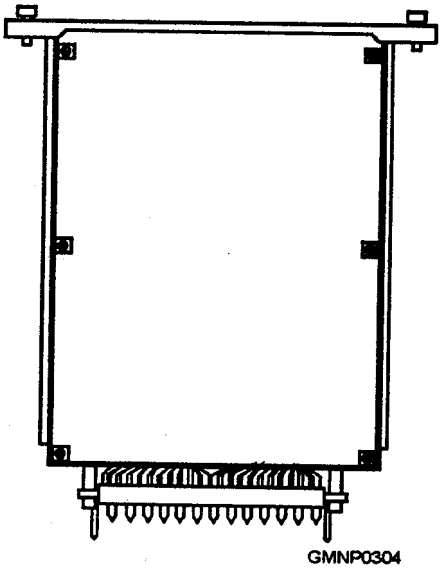

Figure 5-41.—Module.

example, the first number in the relay designations used in plug-in modules identifies the module (2J1 through 2J5) containing the relay. A relay with a designation beginning with 4 (4K10, for example) indicates that the relay is located in module 2J4.

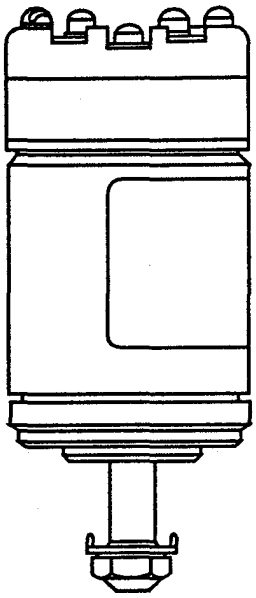

Figure 5-42.—Synchro.

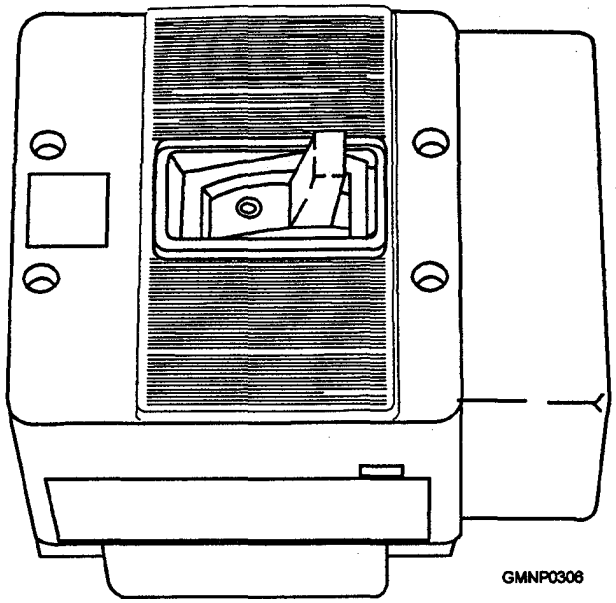

Figure 5-43.—Circuit breaker.

Table 5-10.—Control System Components

Figure	Component	Description/function
5-35	Microswitch	A mechanically actuated miniature switch that provides indications to control circuits.
5-36	Proximity switch	A switching device that provides indications to control circuits. Ferrous metal actuators are mounted on moving components to actuate the switch as the component nears the switch (moves into proximity). The gun mount uses 17 proximity switches.
5-37	Fuses	Circuit protection devices which melt (blow) and open the circuit if current in the circuit exceeds the rating of the fuse. The amperage rating is tailored to the specific circuit. The gun mount uses four sizes of fuses.
5-38	Indicating lamp	A light bulb providing quick-look verification of the status of the gun mount. Indicating lamps are located on the GCP and on anti-icing junction box assembly 1JB1.
5-39	Push-button switch	A manually actuated switch device used in the control circuits of the GCP.
5-40	Toggle switch	A manual switch actuated when the projecting lever (toggle) is moved.
5-41	Module	A plug-in device (similar to a printed-circuit card) containing the electronic circuits and components of the control system. The GCP contains 16 plug-in modules.
5-42	Synchro	A component of the servo system that converts the angular displacement between its stator and rotor to an electrical error signal. The signal controls gun mount movement in train and elevation.
5-43	Circuit breaker	A power switch that provides overload protection. Two circuit breakers on the GCP are manually actuated to activate the gun mount but automatically deactuate in the event of an overload.

Likewise, for any component designation beginning with a number, the number indicates its general location on the gun mount. A designation beginning with a "1" indicates the component is mounted on a bulkhead; "2" indicates the component is located on the training mass; "3" indicates the component is located on the elevating mass; and "4" indicates the component is mounted on the weather shield.

BARREL COOLING CONTROL PANEL

The barrel cooling control panel (fig. 5-44) is located on a bulkhead in the ammunition handling

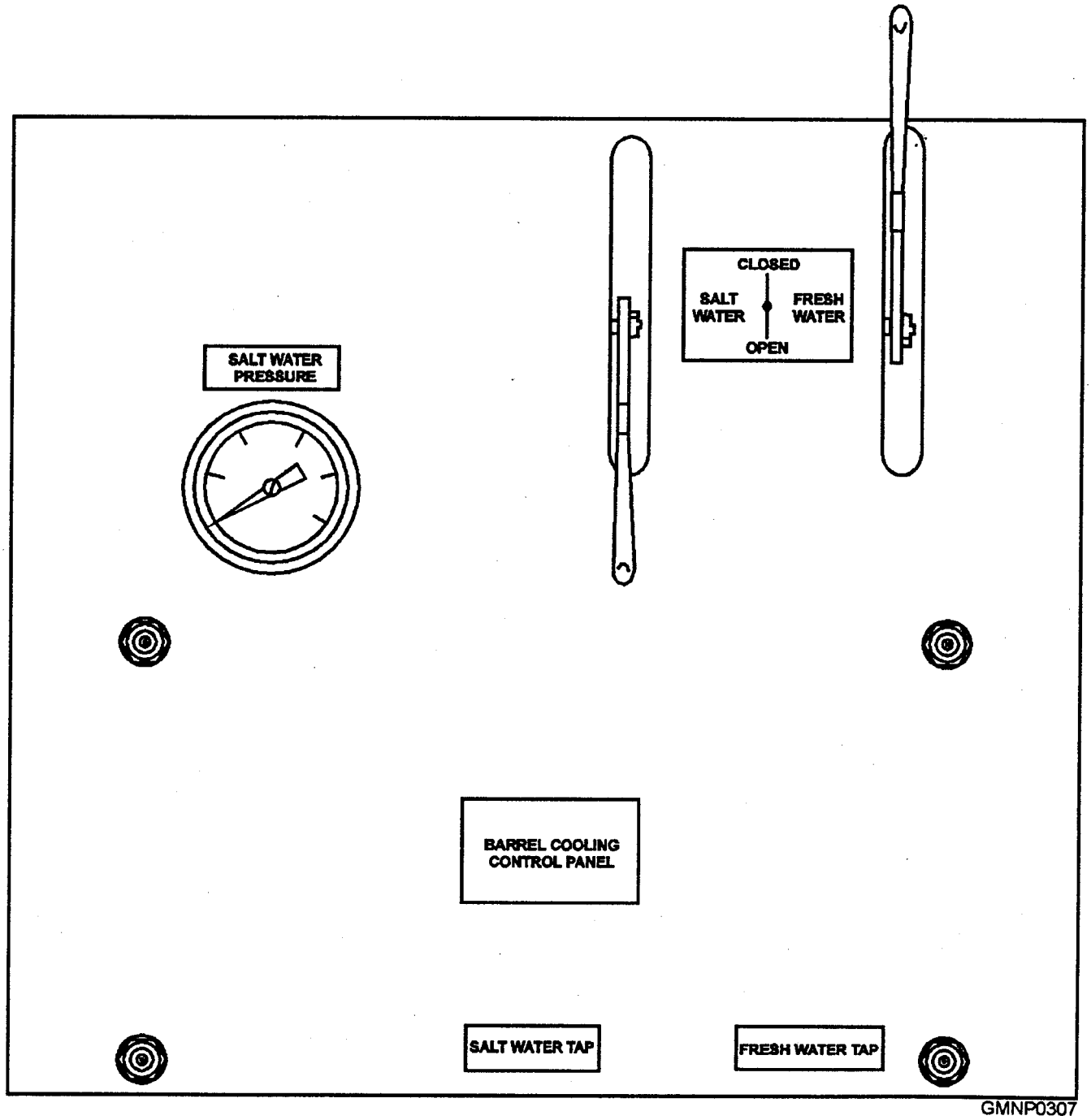

Figure 5-44.—Barre1 cooling control panel.

room. Figure 5-45 shows the interior components of the barrel cooling control panel. Table 5-11 provides a brief description of the use or function of these components in the control system.

This panel controls the flow of water to cool and flush the gun barrel. Both salt water from the ships firemain and fresh water from the ships supply are connected to the panel for delivery to the gun barrel water jacket. The flow of salt water cools the barrel during firing; fresh water flushes the barrel cooling system after firing to prevent excessive saltwater corrosion.

ANTI-ICING SYSTEM

The anti-icing system uses thermostatically controlled heating elements. These heating elements allow the gun mount to continue to operate when the abovedeck temperature is as low as -40°C. The heat prevents ice formation from interfering with train and elevation movements. The anti-icing system consists

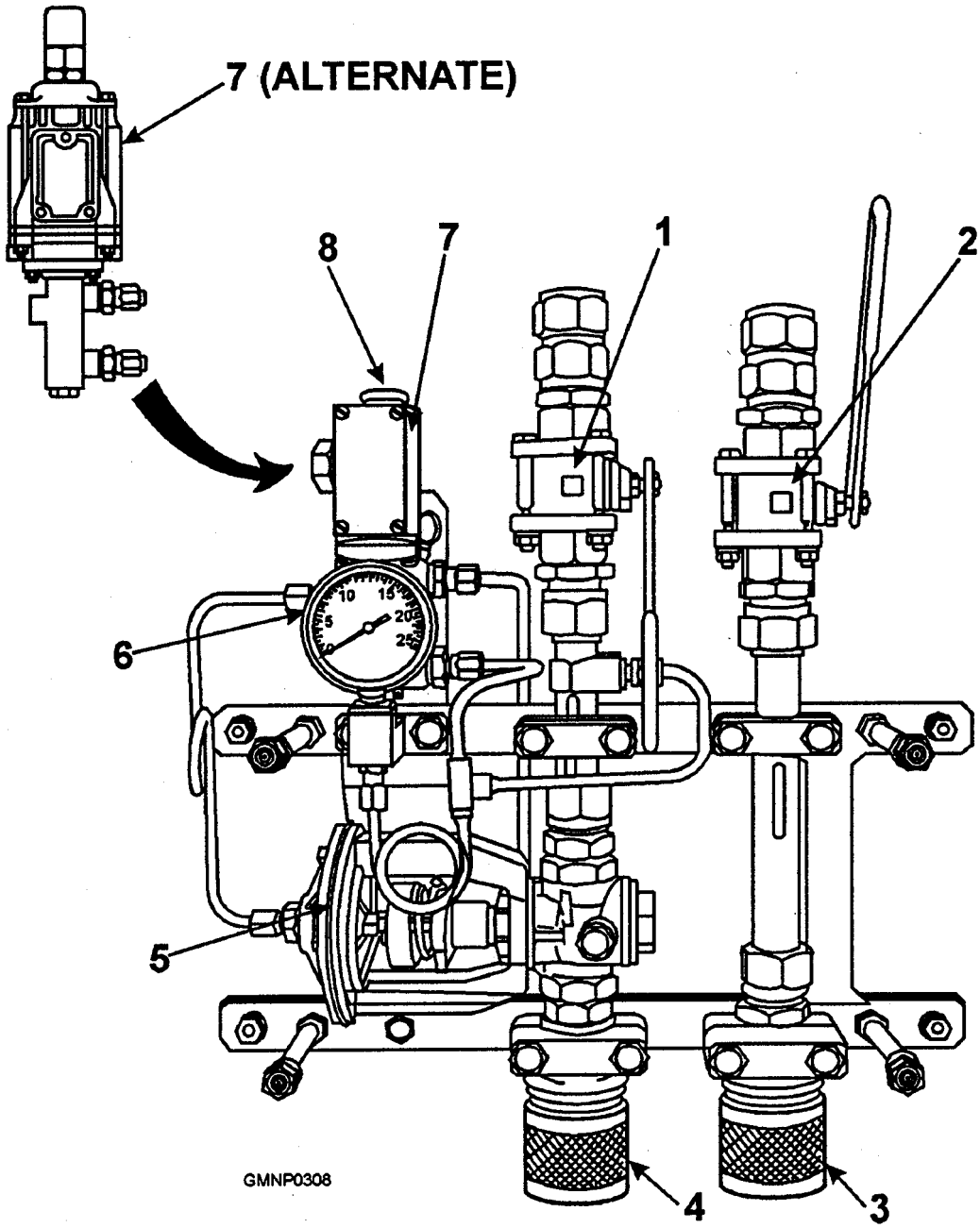

Figure 5-45.—Barrel cooling control panel—inside cover.

Table 5-11.—Barrel Cooling Control Panel (Inside Cover)

Item on figure 5-45	Designation	Nomenclature	Description/ function
1	---	Manual shutoff valve	Opens and closes saltwater line to barrel cooling control panel
2	---	Manual shutoff valve	Opens and closes freshwater line to barrel cooling control panel
3	---	Quick-connect coupling	Provides self-sealing hose connection for freshwater supply to gun barrel water jacket
4	---	Quick-connect coupling	Provides self-sealing hose connection for saltwater supply to gun barrel water jacket
5	---	Diaphragm valve	Opens and closes water line to gun barrel water jacket
6	---	Pressure gage	Indicates saltwater pressure to barrel cooling control panel when manual shutoff valve is open
7	1HP1	Solenoid valve	Controls the diaphragm valve that opens/closes saltwater line to gun barrel water jacket (two models of 1HP1 are in current use)
8	---	Manual control	Permits manual operation of 1HP1

of seven heating elements—one for train and six for elevation.

The heating element for train is mounted on the outside of the water shield. The controlling thermostat is beneath the outer ring of the roller path assembly.

The six heating elements for elevation are on the inner surface of the gun port shield. The thermostat is mounted in the gun port shield above and to the left of the barrel. The heating elements for both train and elevation receive power from junction box 1JB1

(fig. 5-46, Mod 0 gun mount; fig. 5-47, Mod 1 gun mount).

Junction box 1JB1 is located in the ammunition handling room. It distributes 440 VAC power (60 Hz for Mod 0 gun mount, 400 Hz for Mod 1 gun mount) to the train heating element via the train anti-icing junction box assembly 1JB2. Junction box 1JB1 distributes power to the elevation heating elements via the slip ring assembly and elevation anti-icing junction box assembly 3JB2. Junction box 1JB2 is located abovedeck on the underside of the water shield; 3JB2 is located on the right side of the slide forward of the trunnion.

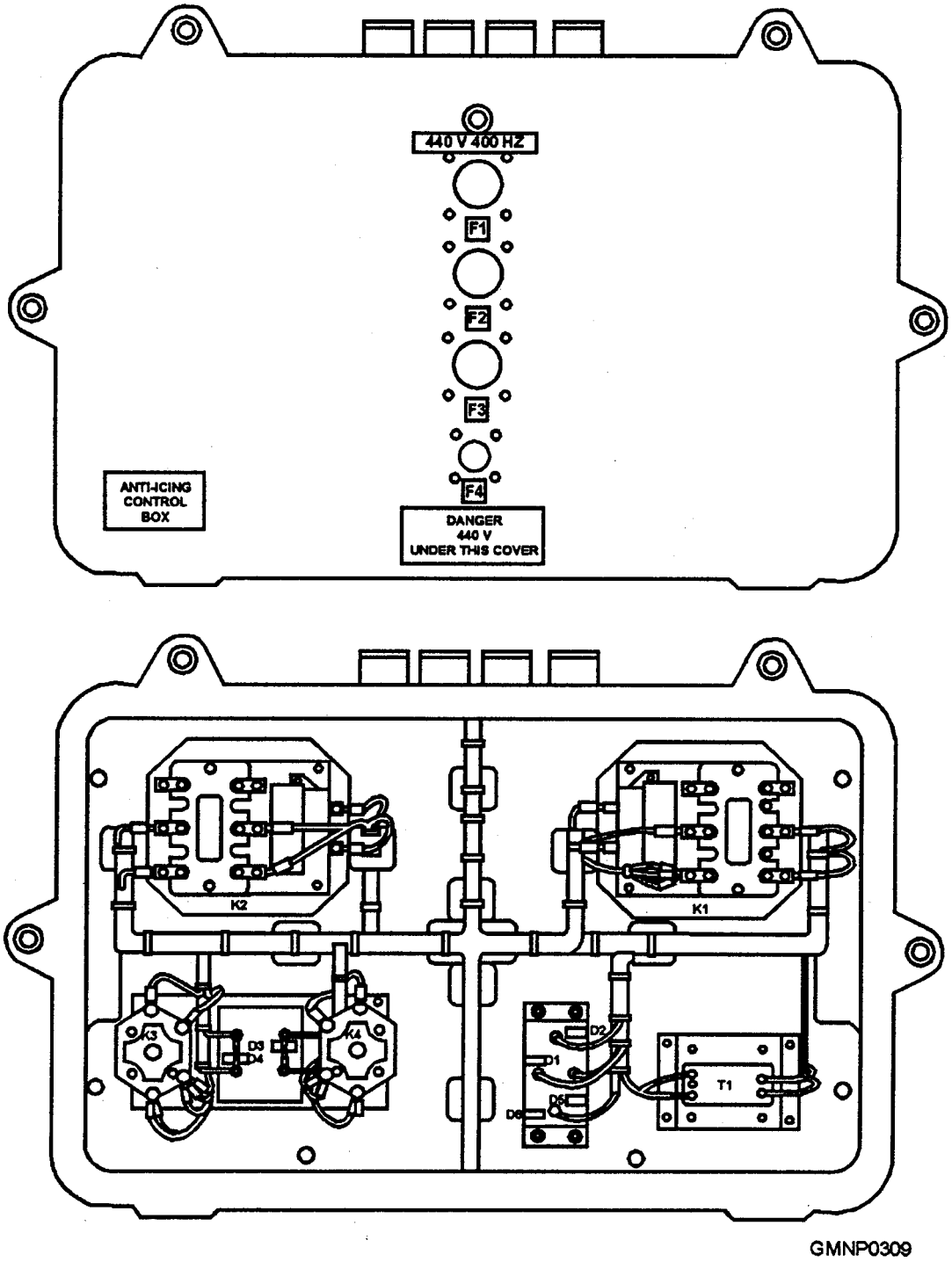

Figure 5-46.—Junction box 1JB1 (Mod 0 gun mount).

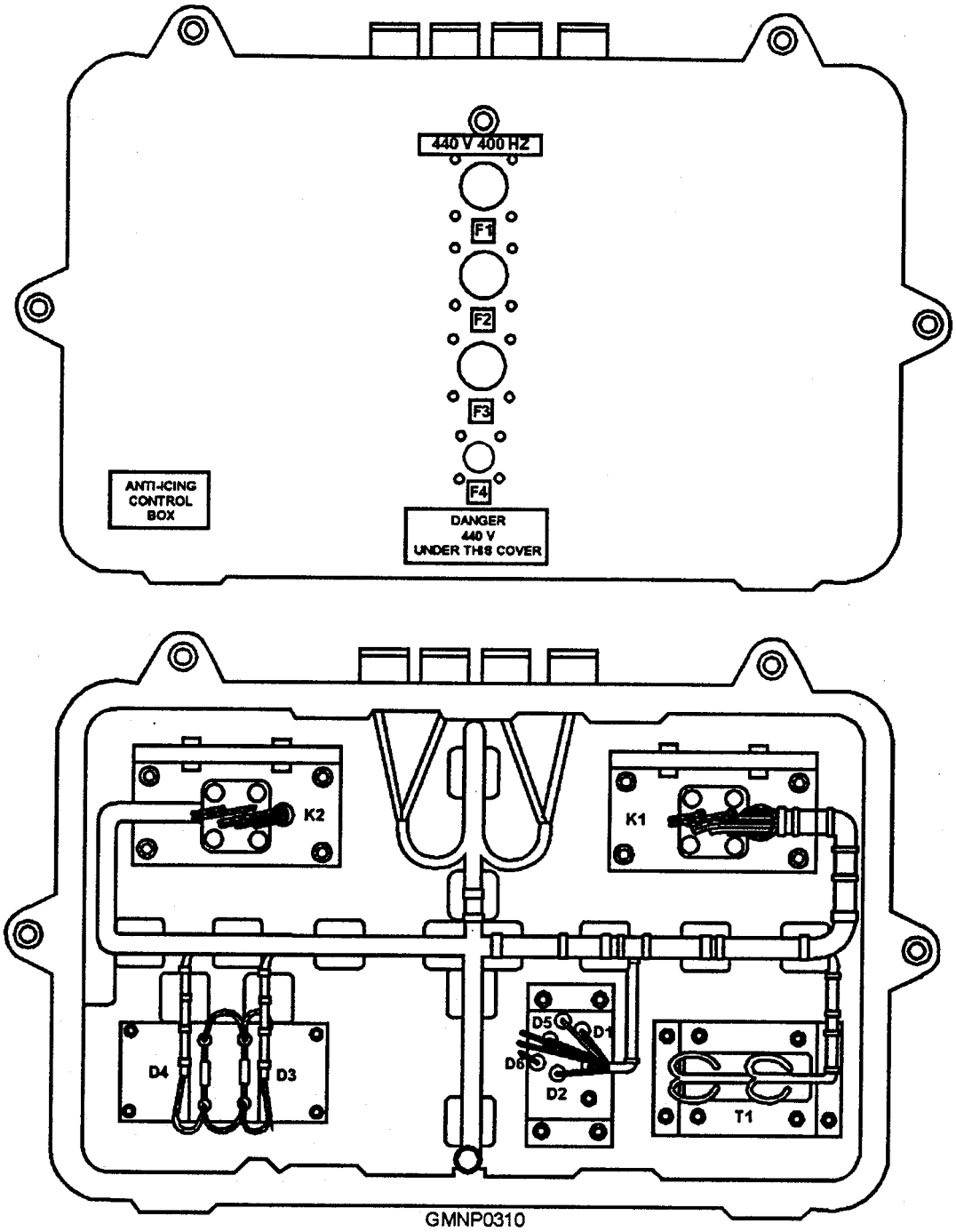

Figure 5-47.—Junction box 1JB1 (Mod 1 gun mount).

The components of 1JB1 are a transformer, a rectifier, four relays and associated diodes (two relays in Mod 1), four fuses and fuse-blown indicators, and four cable connectors. An indicating lamp and the fuse-blown indicators are mounted on the cover to permit quick verification of the operational status of the anti-icing system.

GUN MOUNT CABLING

Electrical cabling and barrel cooling piping extending into the gun mount are routed through the slip ring assembly. The slip ring assembly, through the use of rotating electrical contacts and a rotary pipe joint, allows unlimited training of the gun mount.

SLIP RING ASSEMBLY

The slip ring assembly (fig, 5-48) provides continuous electrical connections between the cabling of the stationary structure of the gun mount and the cabling of the training mass. The slip ring assembly also contains a rotary joint for the barrel cooling system piping.

The slip ring assembly extends up the center of the gun mount. The lower end of the slip ring assembly contains plug-in connectors for the cabling on the stationary structure. The lower end of the slip ring assembly is prevented from rotating by guides mounted to the deck which engage a retaining lug on the slip ring.

The shaft and upper end of the slip ring assembly rotate with the gun mount in train. The upper end contains plug-in connectors for the electrical cables on the rotating structure. When the gun mount moves in train, the upper end and the shaft of the slip ring rotates on bearings mounted on top of the lower end of the assembly.

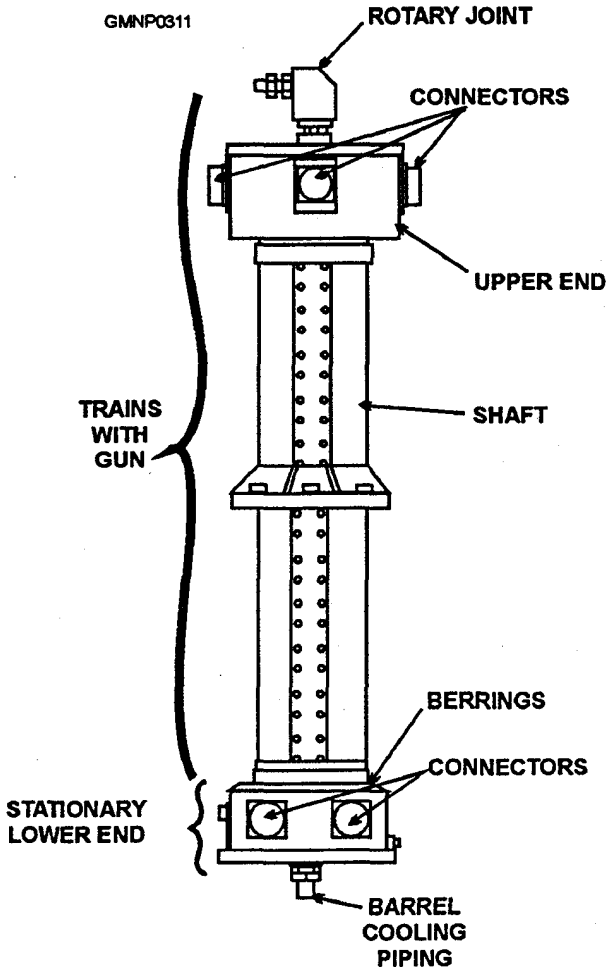

Figure 5-48.—SIip ring assembly.

Brushes inside the shaft of the slip ring assembly rotate around stationary ring-shaped conductors as the gun mount moves in train. The ring-shaped conductors maintain continuous electrical contact with the brushes as the gun mount trains. Each wire going into or out of the slip ring has its own ring and brush assembly.

AUXILIARY SYSTEMS

The three electrical auxiliary systems of the Mk 75 gun mount are the ventilation system, the lighting system, and the telephone system.

Ventilation System

Ventilation in the ammunition handling room is provided by the ships ventilation system. Ventilation inside the gunhouse is provided by an exhaust fan mounted in the weather shield above the entry hatch (fig. 5-49). The fan motor operates on 115 VAC 60 Hz power. The fan is controlled by the mount exhaust fan on switch 2S4. Switch 2S4 is located on the outside of the lower feed system support next to the train-securing pin-operating handle,

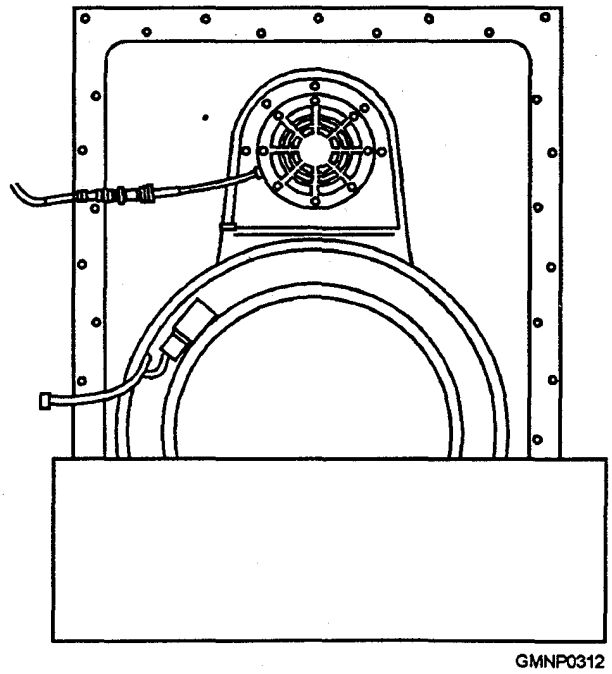

Figure 5-49.—Exhaust fan (inside view).

WARNING

Fumes resulting from gun firing contain hydrogen, carbon monoxide, and other toxic gases which are potential health hazards. The proper operation of the gun mount ventilation system is imperative when firing the gun.

Lighting System

Illumination inside the gunhouse is provided by two fluorescent light fixtures (fig. 5-50) mounted on the inside of the weather shield. One fixture is on the left side of the gun mount; the other is on the right side. Each light fixture contains three fluorescent tubes. The two outer tubes are connected to the white light supply of the ship. The center tube has a red sheath over it and is connected via the GCP to the red light supply of the ship. The red lights are on at all times. The white lights are on when the white light supply of the ship is on and when two interlock switches are actuated. Circuit protection for the gunhouse lighting system is provided by circuit breaker CB4 in the bottom compartment of the GCP.

One of the interlock switches, the mount hatch closed switch 4S 1, is a manually actuated switch located inside the entry hatch. In normal operation, however, switch 4S 1 is actuated when the entry hatch is closed. The other interlock switch, mount white lights, on switch 4S2, is a manually actuated switch located inside the weather shield on the right side of the entry hatch. When both switches are actuated and ships power is on, all lights (white and red) are turned on.

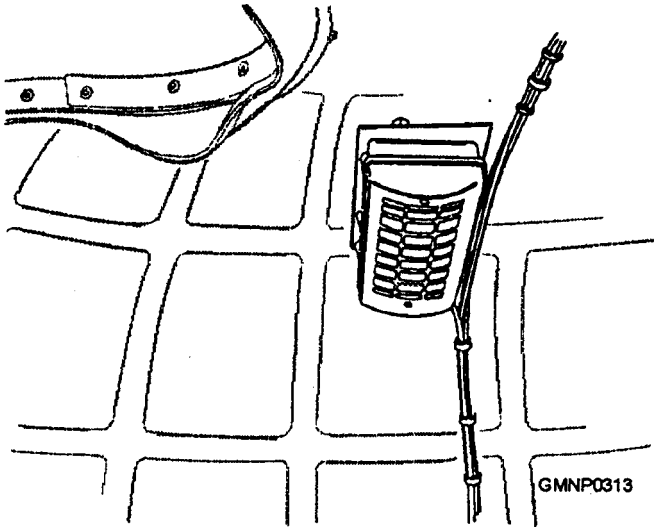

Figure 5-50.—Light fixture.

In addition to the light fixtures, the gun mount has a 115 VAC convenience outlet located on the base of the right trunnion support. This outlet provides power for use inside the gunhouse. Circuit protection for the convenience outlet is provided by circuit breaker CB3 in the bottom compartment of the GCP.

NOTE

The convenience outlet provides only a limited amount of current. Equipment requiring more than 3 amps should NOT be connected to this outlet.

Telephone System

Shielded cable for two telephone lines is provided from the GCP to the gunhouse for use with sound-powered telephones. The telephone connector jacks are located on the right side of the GCP (refer to fig. 5-33 and table 5-7) and on the right trunnion support (fig. 5-51). The telephone lines are routed through slip ring assembly 2C1 and signal junction box 2JB1.

MISCELLANEOUS ELECTRICAL COMPONENTS

There are three miscellaneous electrical components in the GCP not involved in the gun control system. The three components are the GCP blowers, the ROUNDS COUNTER CC, and the ELAPSED TIME COUNTER CO.

GCP Blowers

Two GCP blowers (one intake, one exhaust) circulate air inside the GCP to prevent excessive temperatures from damaging the electrical components. The blowers are mounted on the back of the GCP, on top of air ducts leading into the GCP

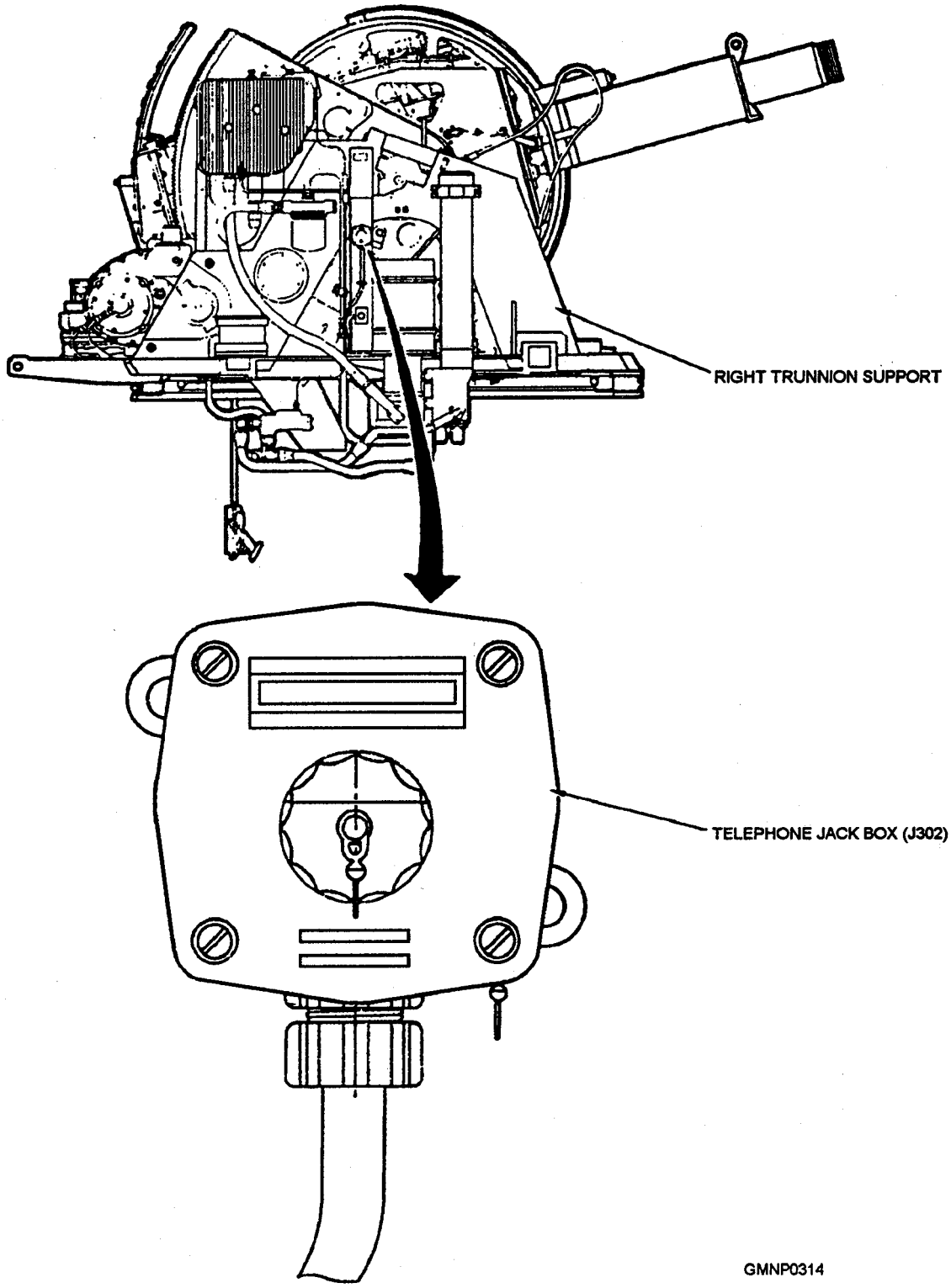

Figure 5-51.—Sound-powered telephone jack box (J302).

(fig. 5-52). The blower motors receive 115 VAC three-phase power (60 Hz for Mod 0, 400 Hz for Mod 1) from the main transformer T1 and are on whenever the SERVO SYSTEM AND SERVICES circuit breaker is positioned to I (see fig. 5-29 and table 5-3).

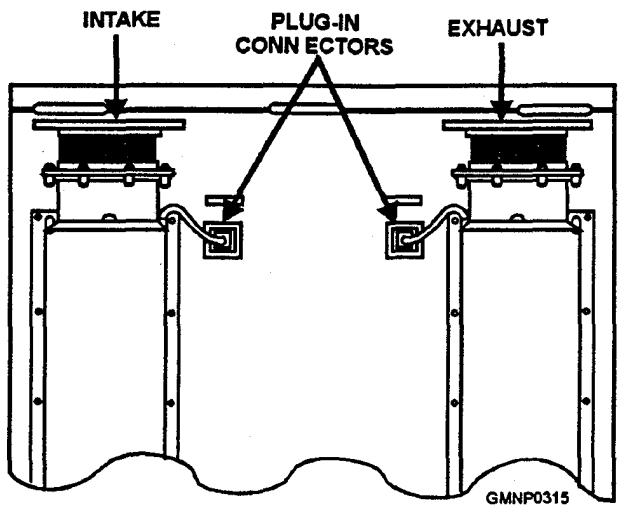

Figure 5-52.—GCP blowers.

Rounds Counter CC

The ROUNDS COUNTER CC is located inside the top cover of the GCP. The counter CC is operated by a solenoid which is energized when a round is fired and allows the gun crew to monitor the number of rounds fired (fig. 5-53 and table 5-12).

Elapsed Time Counter CO

The ELAPSED TIME COUNTER CO is also located inside the top cover of the GCR The counter CO allows the gun crew to monitor the running time of the gun mount for maintenance purposes. Counter CO operates whenever 115 VAC 400 Hz servo power is on (refer to fig. 5-53 and table 5-12).

MK 75 TRAIN AND ELEVATION SYSTEM

LEARNING OBJECTIVE: Recall general information about the Mk 75 gun mount train system and its six major components.

The train and elevation systems position the gun in response to gun-laying orders from the fire control system (FCS) or from the gun control panel (GCP). The train and elevation systems use low-inertia dc drive motors with reduction gearing as power drives. Both systems also use conventional synchros with associated power supplies and electronic control systems to regulate current to the motors.

The train and elevation systems consist of two independent but similar power drives, power supplies, and control systems. Because of their similarity, only the train system will be discussed in this section. A more detailed description of the train and elevation system can be found in the *Technical Manual for 76-mm 62-Calibre Gun Mount Mark 75 MODS 0 and 1,* SW314-AO-MMM-A10/GM MK 750-1 series.

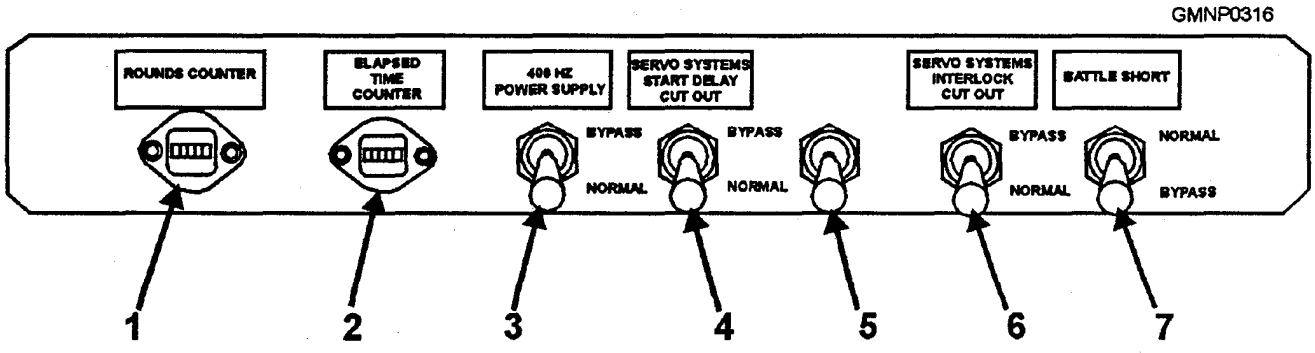

Figure 5-53.—Switch and counter board assembly.

Table 5-12.—GCP: Controls and Indicators (Top Cover Open)

Item on figure 5-53	Panel nomenclature	Designation	Description	Position/ indication	Function
1	ROUNDS COUNTER	CC	Digital counter	0 through 9999	Indicates number of rounds fired
2	ELAPSED TIME COUNTER	CO	Digital counter	0 through 9999	Indicates elapsed-time 115-VAC 400-Hz power is applied to gun mount in hours
3	400 HZ POWER SUPPLY	S7	Two-position toggle switch	BYPASS	Allows 115-VAC 400-Hz power to be supplied from GCP without positioning SERVO SYSTEM AND SERVICES circuit breaker to I
				NORMAL	Requires SERVO SYSTEM AND SERVICES circuit breaker to be positioned to I for 115-VAC 400-Hz power to be supplied from GCP
4	SERVO SYSTEMS START DELAY CUT-OUT	S8	Two-position toggle switch	BYPASS	Bypasses the 5-second delay on energizing servo systems start circuit
				NORMAL	Causes a 5-second delay on energizing servo systems start circuit
5	- - -	S9	Spare toggle switch	- - -	Not used
6	SERVO SYSTEMS INTERLOCK CUT-OUT	S10	Two-position toggle switch	BYPASS	Allows gun mount to load and fire in remote without energizing either/both servo systems
				NORMAL	Allows gun mount to load and fire in remote only when both train and elevation servo systems are energized
7	BATTLE SHORT	S11	Two-position toggle switch	NORMAL	Prevents SERVO SYSTEM AND SERVICES and HYDRAULIC UNIT circuit breakers from being turned on when panel covers are open
				BYPASS	Bypasses interlocks so SERVO SYSTEM AND SERVICES and HYDRAULIC UNIT circuit breakers can be turned on when panel covers are opened or removed

The train system consists of strain power drive (fig. 5-54) that is mounted on the rear platform of the carriage. The power drive moves the gun mount around the stationary ring of the roller path assembly in response to train positioning orders. Train movement is unlimited due to a slip ring assembly for electrical cabling and a rotating coupling for the barrel cooling piping. The train system consists of the following six components:

1. Electric motors
2. Reduction gear assembly
3. Train synchro control box assembly
4. Power supply
5. Motor control system
6. Train securing mechanism

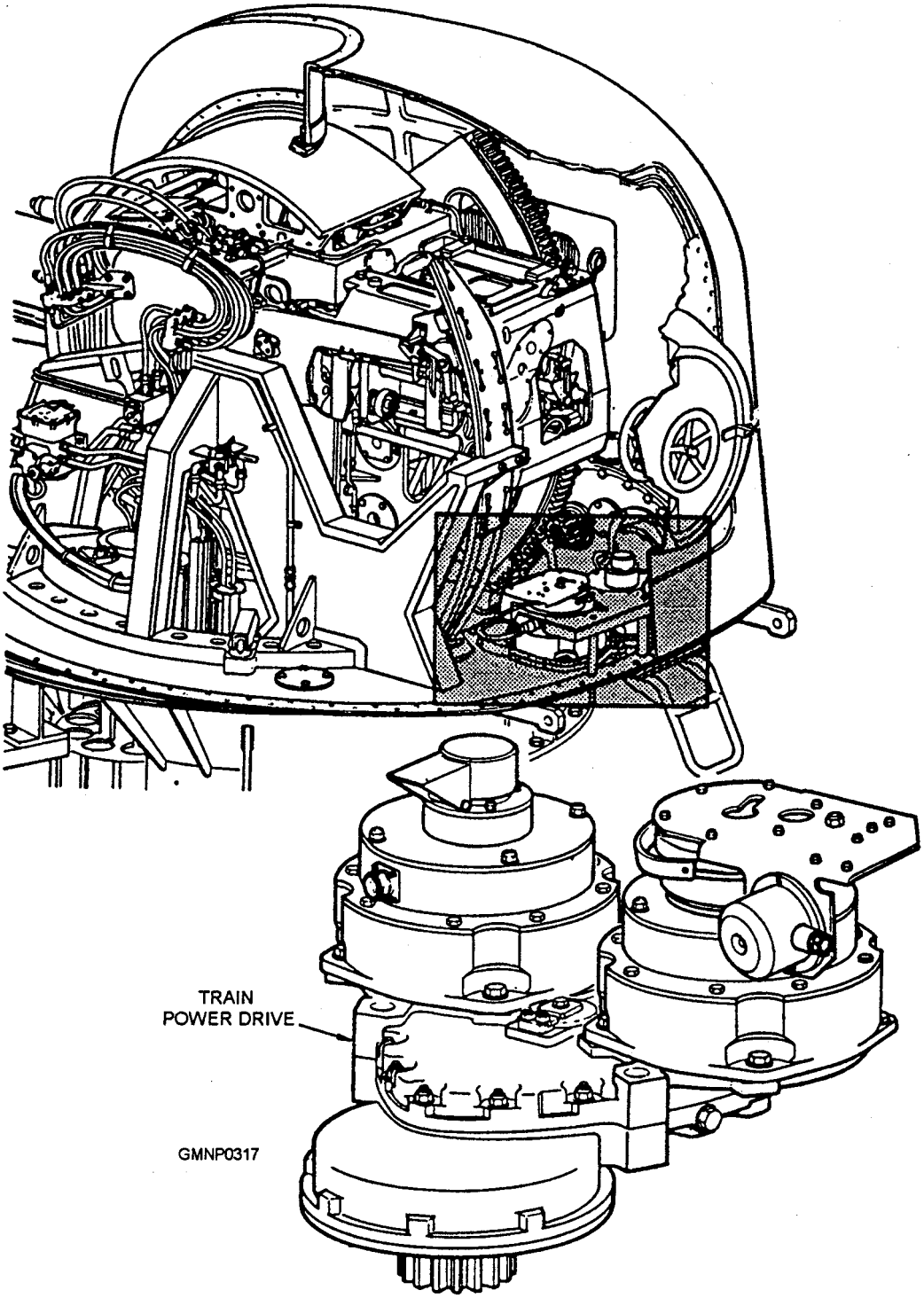

Figure 5-54.—Train power drive.

ELECTRIC MOTORS

The train system uses two electric motors (fig. 5-55) to drive the reduction gear assembly and move the gun in train. The electric motors are lightweight (25 kg) low-inertia, dc motors with permanent magnet fields and printed disk rotors. The rated output of each motor is 3 kW at 3,000 rpm.

The left electric motor (No. 1) has an electromechanical brake assembly installed on the top of its output shaft. The brake assembly consists of an electromagnet, a braking disk, and a rotating disk splined to the motor output shaft. With no power applied to the brake, steel springs around the top of the electromagnet push the braking disk up. When power is applied to the brake, the electromagnet pulls the braking disk down (compressing the springs) and releases the rotating disk. The electromagnet remains energized, and the brake remains released as long as power is applied to the brake.

The brake has a manual release handle for power-off operation. It also has a push button for use with a manual hand crank, The pushbutton releases the brake only when the servo system power is on and the hand crank is installed.

The hand crank fits into an opening in a bracket on top of the brake. The hand crank is used to train the gun mount manually during maintenance and power-off operations. A proximity switch, mounted under the bracket, turns on the **TRAINING HAND CRANK IN**

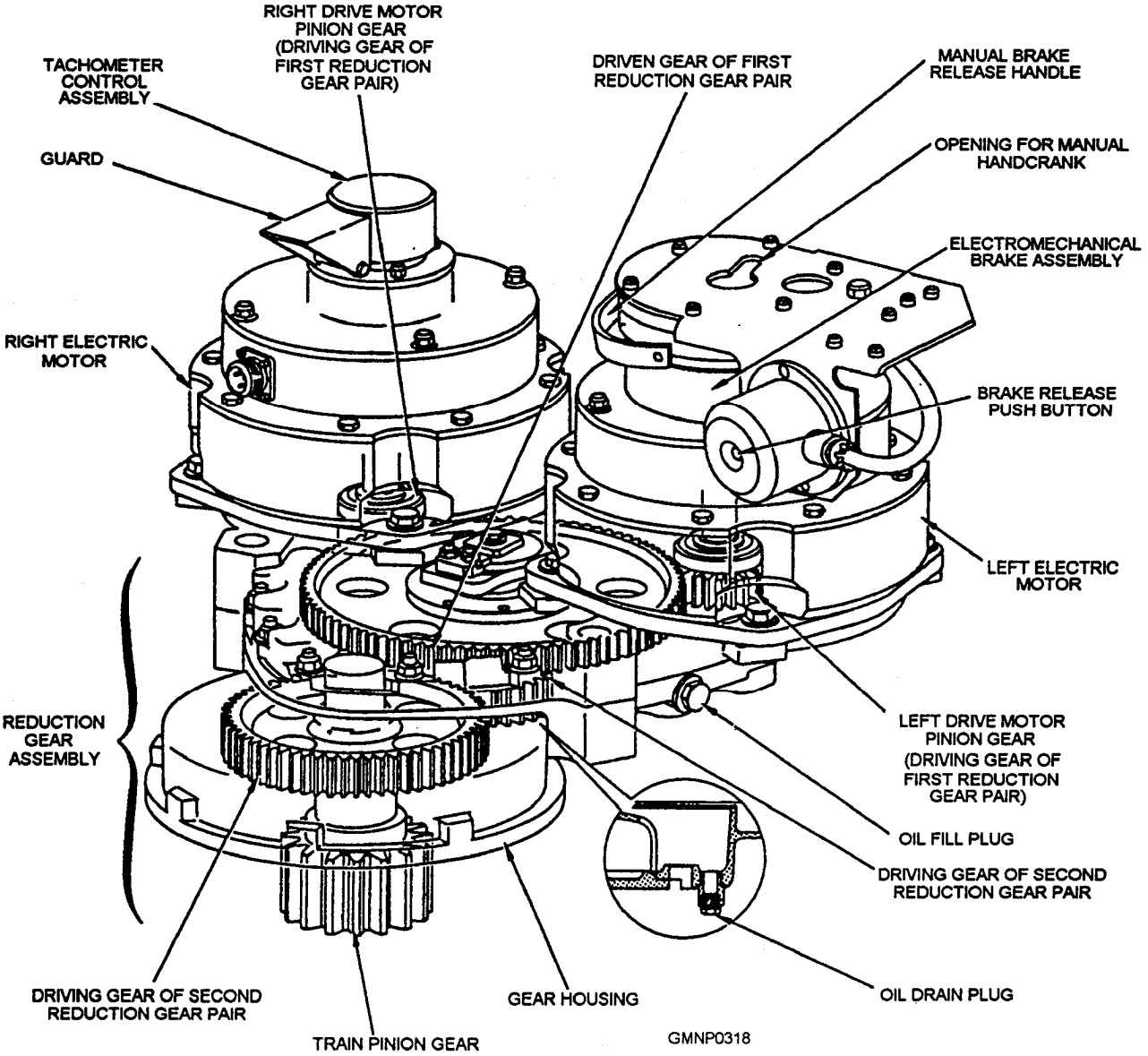

Figure 5-55.—Train power drive (cutaway).

lamp at the GCP (refer to fig. 5-29 and table 5-3). The proximity switch also disables the train amplifier ready circuit and this, in turn, disables the motor start-run circuit. With the hand crank installed, a microswitch, mounted under the bracket, is actuated. This action enables the brake to be energized by the brake push button.

The right electric motor (No. 2) has a tachometer control assembly installed on the top of its output shaft beneath a protective guard. The tachometer produces voltage in direct relation to the motor speed. This voltage provides feedback to the motor control system.

REDUCTION GEAR ASSEMBLY

The train reduction gear assembly (refer to fig. 5-55) reduces the high rpm rate developed by the electric motors by a 308.7-to-1 ratio. This reduction ratio and the motor control circuitry produce a maximum train rate of 65 degrees per second. The reduction gear assembly consists of the gear housing, two pairs of reduction gears, and the pinion gear.

The reduction gear assembly is mounted on the rear platform of the carriage. The train pinion gear extends through the carriage and meshes with the stationary ring of the roller path assembly. The two electric train motors are mounted on top of the reduction gear assembly. The pinion gears of the electric motors drive the gear train.

The reduction gears operate in a lubricating oil bath. A fill plug is located on the side of the assembly, and a drain plug is located on the bottom. Removing the fill plug permits the oil level to be checked and, if necessary, permits oil to be added. Removing the drain plug permits the oil to be drained.

TRAIN SYNCHRO CONTROL BOX ASSEMBLY

The train synchro control box assembly houses the train synchros. The train synchro control box assembly and the train synchro transmission gear assembly (fig. 5-56) are mounted on the rear of the carriage platform forward of the elevation power drive. Graduations and a marker on the outside of the train synchro control box assembly provide an installation benchmark.

The train synchro control box (fig. 5-57) houses the train synchros, the tilt-angle potentiometer, the motor and firing cutout camstack assembly, and the dials and dial-illuminating lamp components of the train servo system.

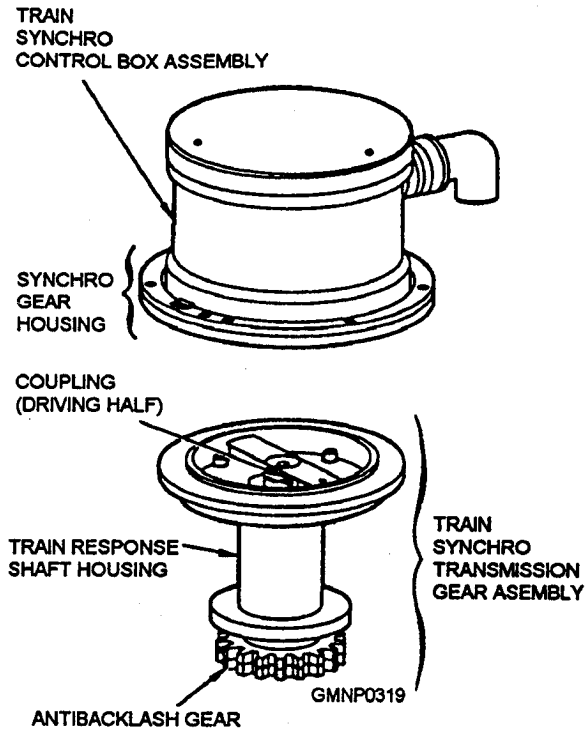

Figure 5-56.—Train synchro control box assembly and transmission gear assembly.

Train Synchros

As the gun moves in train, the train response shaft rotates the synchros through the synchro gearing in the bottom of the train synchro control box. The antibacklash gears and the couplings ensure that the rotation of the synchros exactly matches the train movements of the gun mount.

Three of the train synchros are control transformers (CTs). Two CTs receive position signals from the FCS and generate error signals-the third is a spare. The error signals, when amplified and processed by the motor control circuity, regulate the current applied to the train motors. One of the Cts (1X) is for coarse control (error signal greater than 1.5 degrees); the other CT (36X) is for fine control (error signal less than 1.5 degrees).

In addition to the 1X and 36X CTs, the train synchros include two torque transmitters (Txs) and five control transmitters (CXs). The 1X TX continuously transmits the train position to FCS and to a torque receiver synchro at the GCP. The torque receiver synchro operates the train position indicator dial. The 180X TX continuously transmits a superfine indication of train position to FCS.

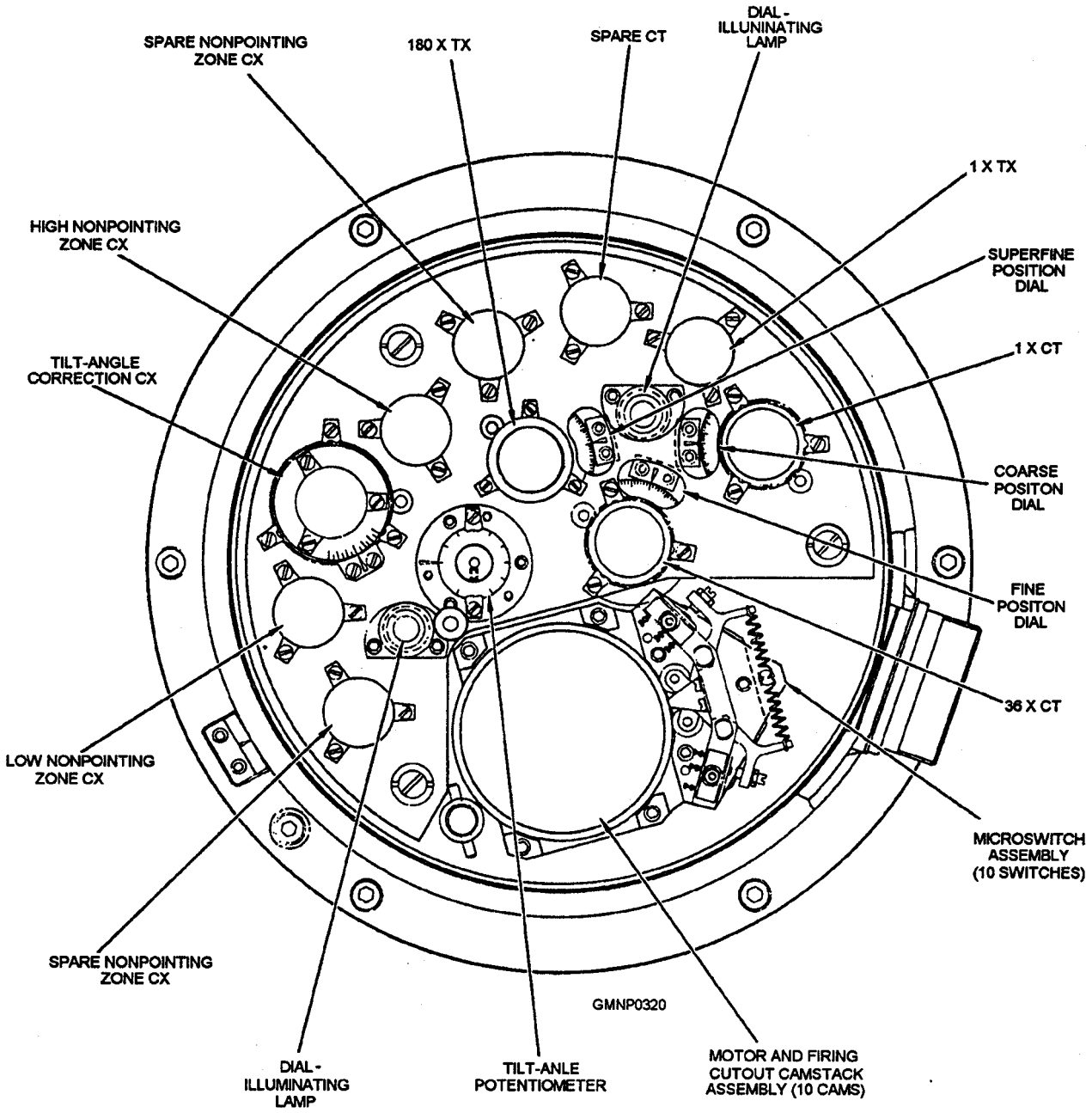

Figure 5-57.—Train synchro control box components.

One of the five CXs is for tilt-angle correction. This CX adds error through the tilt-angle potentiometer to the output of the elevation 36X CT. The error is based on the tilt-angle difference between the roller path of the gun mount and the master level of the ship.

Of the remaining four Cxs, one is for the high nonpointing zone, one is for the low nonpointing zone, and the other two are spares. The outputs of the nonpointing zone Cxs are used to temporarily override training orders. This output prevents the barrel from training into a nonpointing zone until it elevates over the zone.

Tilt-angle Potentiometer

The tilt-angle potentiometer adjusts the intensity of the correction signal from the tilt angle correction CX. This adjustment is made during installation. It compensates for any angular difference between the plane of the gun mount and the plane of the master level of the ship. The tilt-angle potentiometer can correct an angular difference up to 10 minutes. On ships outfitted with the FCS Mk 92, the potentiometer is set at 0 and is locked down since the computer makes this correction directly.

Motor and Firing Cutout Camstack Assembly

The motor and firing cutout camstack assembly, like the train synchros, is driven by the synchro gearing in the bottom of the train synchro control box. The camstack assembly consists of a stack of 10 cams and 10 cam-actuated microswitches. As the gun mount moves in train, the camstack rotates in a 1-to-1 ratio matching train movement. The cams are cut during installation to conform to the structure of the ship at the gun mount location.

The cams are numbered 1 through 10 from top to bottom. The No. 1 cam is a spare. The No. 2 cam is cut to indicate the train stow position. When the gun mount is at the stow position, the No. 2 cam deactuates its microswitch, which allows the normally closed contacts to close and light the **TRAIN—IN STOW POSITION** lamp at the GCP.

Four of the remaining cams deactuate their associated microswitches (opening the contacts) to disable the firing circuit as the gun mount trains into nonfiring zones. Two other cams are spare nonpointing zone cams. The remaining two cams deactuate their associated microswitches (opening the contacts) to disable the train motor circuits. With the motor circuits disabled, the brake is set. This action prevents the barrel from entering the nonpointing zone if the electronic nonpointing zone system fails. When the motor circuits are disabled, the barrel must be manually cranked out of the nonpointing zone.

Dials and Dial-illuminating Lamps

The train synchro control box contains five dials, driven by the synchro gearing. The dials indicate the train position of the gun mount. One of the dials is on the tilt-angle potentiometer; another is on the tilt-angle correction CX. These dials are used to adjust the tilt-angle correction between the gun mount and the FCS reference (not used with the Mk 92 FCS). The remaining three dials are graduated to provide coarse, fine, and superfine indications of the train position.

The coarse position dial is graduated in degrees from 0 to 360. This dial makes one revolution with each revolution of the gun mount. The fine position dial is graduated in 5-minute increments between 0 and 10 degrees. This dial makes 36 revolutions with each revolution of the gun mount. The superfine position dial is graduated in l-minute increments between 0 and 120 minutes. This dial makes 180 revolutions with each revolution of the gun mount.

The train synchro control box contains two dial-illuminating lamps. With the protective cover of the synchro control box removed, the lamps permit the synchro dials to be read. The lamps are on when the servo system power is on.

POWER SUPPLY

The train and elevation systems use a common power supply, consisting of three transformers located at the GCP. The transformers supply the power required to drive the train and elevation motors. The transformers also supply power to the train and elevation motor control systems. The power supply transformers (refer to fig. 5-32 and table 5-6) are the main transformer (T1), the signal-ramp (sawtooth) transformer (T2), and the electronic supply transformer (1J1-T1) (not shown).

Main Transformer T1

The main transformer (T1) is located at the GCP and supplies power to the train and elevation motors. The ships supply provides 440 VAC three-phase power 60 Hz for Mod 0 or 400 Hz for Mod 1) to T1. Transformer T1 then provides six outputs of 170 VAC power. The six outputs provide a common power supply to the train and elevation motors.

Signal Ramp (Sawtooth) Transformer T2

The signal-ramp (sawtooth) transformer (T2) supplies power to the phase-consent and signal-ramp circuits. The ships supply provides 440 VAC three-phase power 60 Hz for Mod 0 or 400 Hz (for Mod 1) to T2. Transformer T2 then provides 50 VAC six-phase power to the phase-consent and signal-ramp circuits.

Electronic Supply Transformer 1J1-T1

The electronic supply transformer (1J1-T1) is located in the power supply module 1J1 of the GCP. Ships supply provides 115 VAC 400 Hz single-phase power to 1J1-T1.

MOTOR CONTROL SYSTEM

The motor control system regulates the polarity and amplitude of the current supplied to the train and elevation motors. This action controls the direction and speed of motor rotation. The motor control system is mostly electronic and consists of the following components and circuits at the GCP: the: silicon-controlled rectifiers (SCRs), the phase-consent and signal-ramp circuits, the demodulator circuits, the error amplifier circuits, the tachometer circuits, and the motor current-limiter circuits.

Silicon-Controlled Rectifiers (SCRs)

The SCRs (fig. 5-58) are solid-state electronic devices that act both as switches and as rectifiers. The train and elevation systems each use 12 SCRs to control the speed and direction of the drive motors. The 12 train SCRs are located on modules 1J6 and 1J8 (refer to fig. 5-31 and table 5-5). A pair of SCRs control each of the six 170 VAC voltages. These voltages are supplied to the SCRs by the main transformer T1.

One SCR in each pair conducts current for clockwise rotation; the other conducts current for counterclockwise rotation. The polarity of the error signal determines which SCR in each pair conducts. The magnitude of the error signal determines the amount of current flow through the SCR. The current controls the speed of the motors.

The conduction of the SCR depends on a positive potential being present on its control gate. It also depends on a forward bias between its anode and cathode. Once turned on, the SCR continues to conduct until the potential between the anode and cathode is either interrupted or inverted.

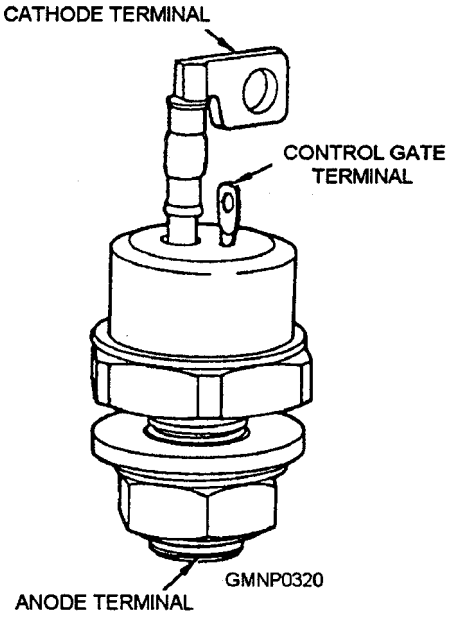

Figure 5-58.-Silicon-control1ed rectifier (SCR).

Phase-Consent and Signal-Ramp Circuits

Each of the two submodules (A1 and A3) of the signal-ramp module 1J4 at the GCP (refer to fig. 5-31 and table 5-5) contains three phase-consent (square wave) circuits and three signal-ramp (sawtooth wave) circuits. These circuits generate six phase-consent signals and six signal-ramp signals. These signals, in turn, are used to control the control gate voltage to the six pairs of SCRs for the train system and the six pairs of SCRs for the elevation system.

Demodulator Circuits

The train demodulator circuits are located in submodules A7 and A8 of elevation amplifier module 1J3 at the GCP. These circuits rectify the 400 Hz error signals from the train synchros into a dc voltage. The dc voltage can then be used by the error amplifier circuits. The demodulator circuits use metal-oxide semiconductor field-effect transistors (MOSFET switches), operated by reference square wave signals. The MOSFET switches are used to produce the required full-wave rectification.

Error Amplifier Circuits

The train error amplifier circuits are located in submodule A2 of 1J3. The error amplifiers amplify and process the demodulated error signals from the synchro systems. They provide one input to the tachometer circuit.

Tachometer Circuits

The train tachometer circuits are located in submodule Al of 1J3. These circuits combine the output from the error amplifier and either the obstacle contouring circuit or the limit-stop circuit with a velocity output from the tachometer and a current feedback signal from the drive motors. The outputs from the tachometer circuits are order signals that, after passing through the motor current-limiter circuits, control the gating of the SCRs.

Motor Current-Limiter Circuits

The train motor current-limiter circuits are located in the current-limiter module in the bottom compartment of the GCP. These circuits monitor the current feedback from the electric drive motors. If the drive motor draws high levels of current longer than the short time required for normal acceleration, the current-limiter circuit reduces the order signal. This, in turn, reduces the current applied to the drive motors.

TRAIN SECURING MECHANISM

The train securing mechanism locks the carriage to the stationary outer ring of the roller path assembly when the gun is stowed. The train securing mechanism consists of a stowing pin shifting lever, a train stowing pin, and the train stowing pin handle. A proximity switch, mounted behind the stowing pin handle, is actuated when the stowing pin is engaged. The stowing pin handle is on the left side of the mount and extends down into the ammunition handling room. The proximity switch lights the TRAIN LOCK IN lamp at the GCP. With the stowing pin engaged, the train amplifier ready circuit is disabled, in turn, disables the train motor start circuit.

MK 45 GUN MOUNT CONTROL SYSTEM

LEARNING OBJECTIVE: Identify the components of the Mk 45 gun mount control system.

Components of the Mk 45 gun mount control system control and distribute power to the gun-loading and gun-laying systems. The power panel EP1, located in the loader room, distributes power to the control components. The control panel EP2, also located in the loader room, controls the gun mount operations and provides a means for testing and exercising the gun-laying and the gun-loading systems. The display panel EP3, located adjacent to the lower loading station, displays round orders for ammunition handlers.

The gun mount control system also includes position sensors (proximity and optical switches), relays, and solenoids that activate, control, monitor, and test operations of the gun mount. Solid-state logic and

microprocessor circuits in the EP2 interlock and sequence the cycles of gun-loading system components and also control electric motor operation. The panels of the control system (fig. 5-59) are as follows:

1. Power panel (EP1)
2. Control panel (EP2)
3. Train and elevation local control unit
4. Display panel (EP3)

Individual components of the gun mount control system are located throughout the gun mount. This section will cover only a general description of the Mk 45 gun mount control system. For a more detailed and in-depth description, refer to the *Technical Manual for 5-Inch 54-Caliber Gun Mount Mark 45,* SW323-D1-MM0-010/GM MK 45 series.

POWER PANEL EP1

Power panel EP1 contains the electrical power-distribution and power-converting components of the gun mount control system. Power from the ship's 440 VAC normal or alternate supplies enters EP1 and passes through circuit breakers and contractors to the drive motors. A step-down transformer in EP1 reduces the 440 VAC motor supply to 115 volts for control, lighting, anti-icing, and test purposes.

Panel EP1 contains motor contractors, overload relays, manual interlock switches, +25 VDC power supplies for solenoids, lights, switch circuits, a fan, batteries, battery chargers, an electronic component assembly, ac output driver circuit cards, resistors, capacitors, rectifiers, relays, fuses, and terminal boards. A solenoid door latch prevents the panel door from being opened when normal or alternate 440 VAC is applied to the panel. Figure 5-60 shows the back of the EP1 door, and table 5-13 is a list of the components

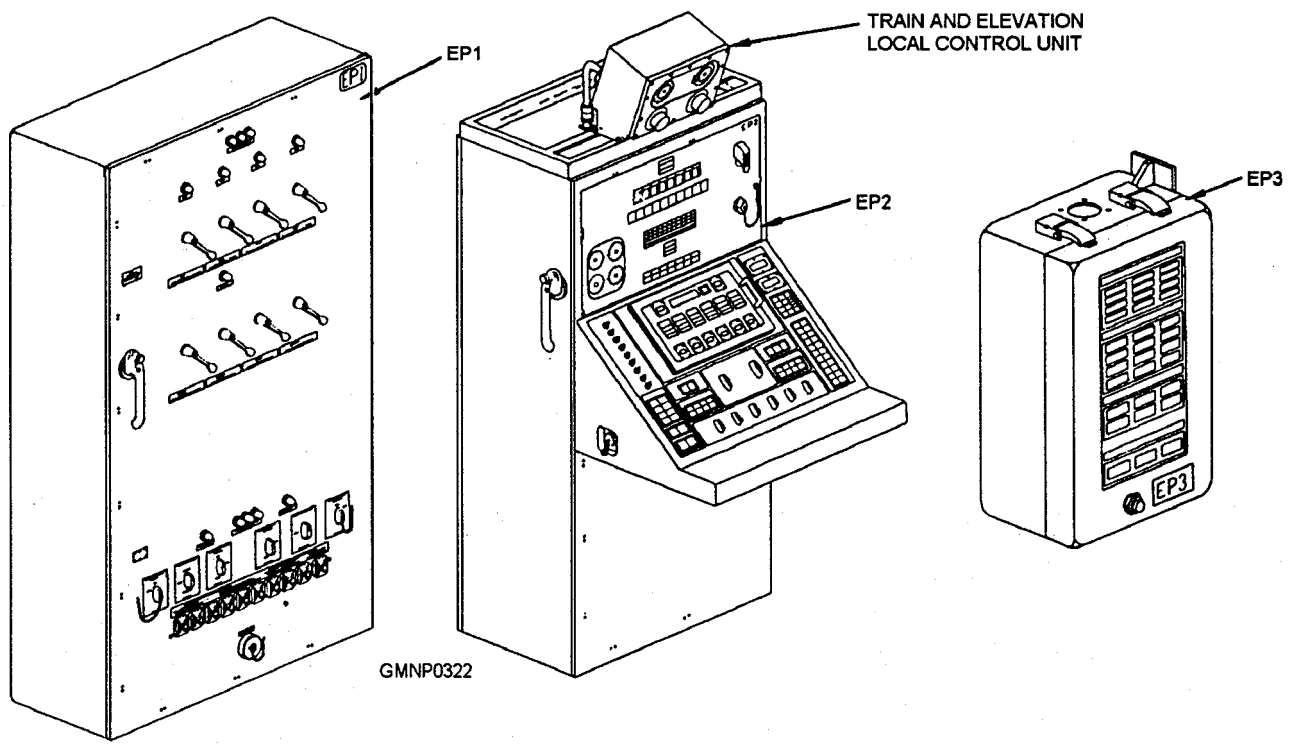

Figure 5-59.—Electrical control system panel.

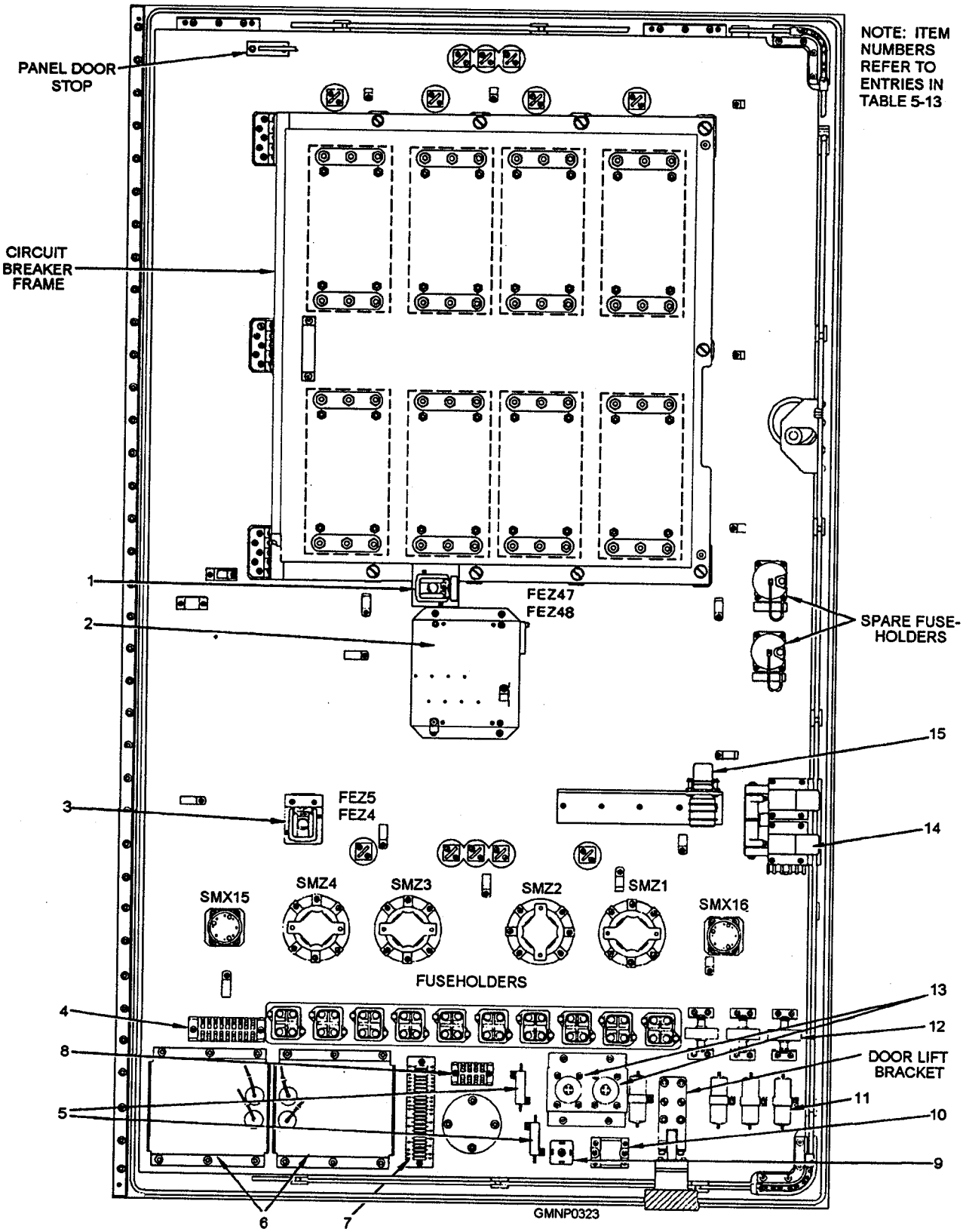

Figure 5-60.—Power panel EP1 (back of door).

Table 5-13.–Power Panel EP1–Back of Door

Item on Fig. 5-60	Name	Designation	Purpose
1	Fuseholder	- - -	Contains fuses for base ring heater
2	Output driver circuit board housing	- - -	Contains 115 VAC to contactor coils and to train warning bell
3	Fuseholder	- - -	Contains fuses for 115 VOLTS CONTROL SUPPLY AVAILABLE light DSZ2
4	Terminal board	- - -	Provides wire connection points
5	Resistors	RAZ3 RAZ4	Provide electrical load for emergency firing supply batteries during battery test
6	24-volt rechargeable batteries	- - -	Provide emergency power for firing circuits
7	Resistor circuit board	- - -	Prevents shorts from damaging power supplies
8	Terminal board	- - -	Provides wire connection points
9	Bridge rectifier	CRZ4	Rectifies 115-VAC 60-Hz input voltage for power supplies
10	Solid-state relay	KCZ2	Applies control supply power to power supply inputs when not testing batteries
11	Metalized film capacitors	- - -	Dampen inductive voltage in electrical circuits
12	Klip-Sel selenium rectifier	- - -	Dampens inductive voltage from control transformer
13	Battery chargers	PSZ5 PSZ6	Recharge emergency firing supply batteries
14	Solenoids	LCZ1 LCZ2	Lock EP1 door when 440-VAC power is applied to panel
15	Relay	KCZ3	Applies load to batteries during battery test

mounted on the back of the door. Figure 5-61 shows the interior of EP1, and table 5-14 lists the components inside of the EP1.

CONTROL PANEL EP2

Control panel EP2 contains components which control gun-loading system functions and locally

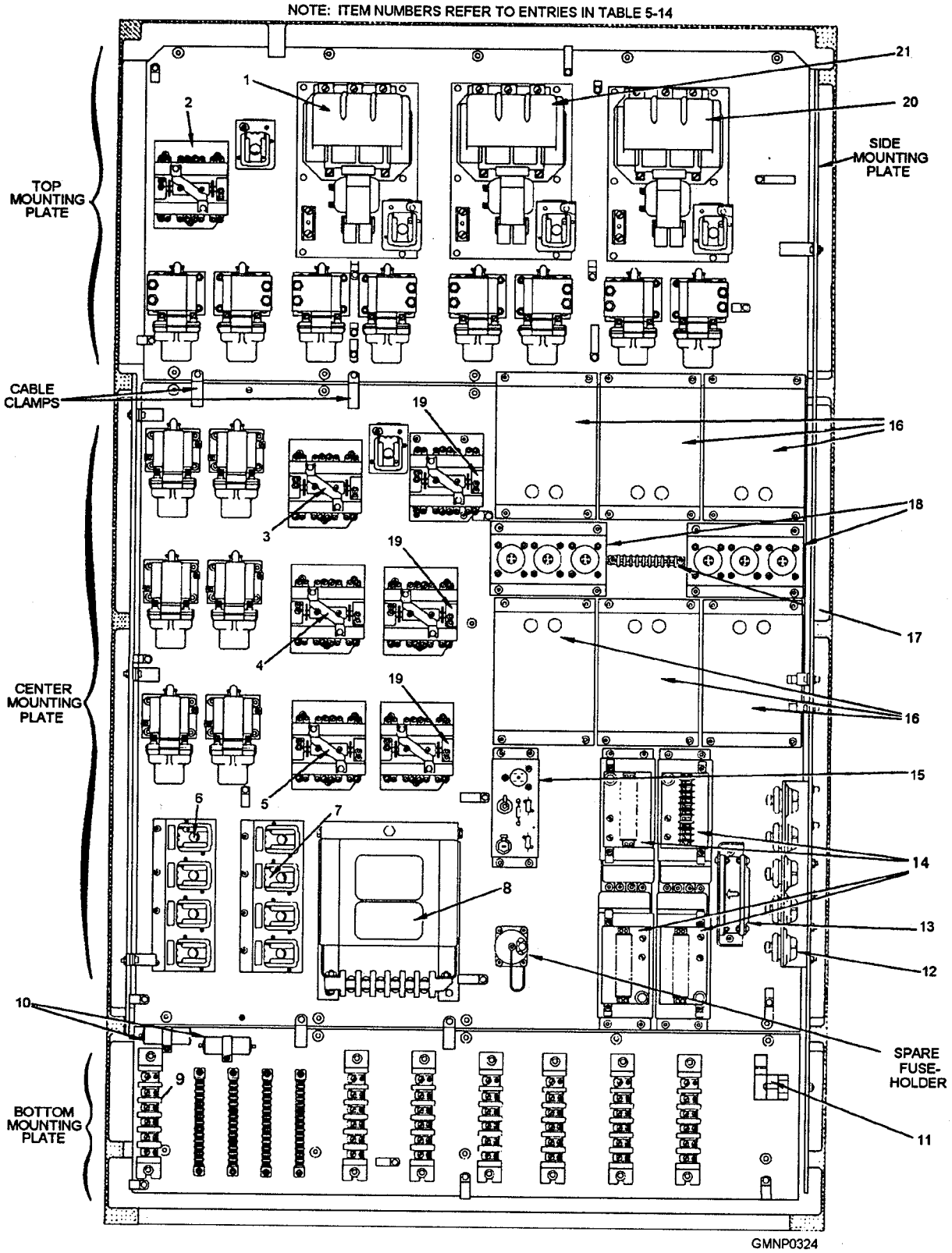

Figure 5-61.—Power panel EP1 (interior),

Table 5-14.—Power Panel EP1—Interior

Item on Fig. 5-61	Name	Designation	Purpose
Top Mounting Plate			
1	Contactor size 3 Overload relay Overload relay Fuseholder	KPT1 KPT2 KPT3	Connect 440 VAC to train motor and protect motor from overloads
2	Contactor size 1 Overload relay Overload relay Fuseholder	KPE1 KPE2 KPE3	Connect 440 VAC to elevation motor and protect motor from overloads
Center Mounting Plate			
3	Contactor size 1 Overload relay Overload relay Fuseholder	KPZ11 KPZ12 KPZ13	Connect 440 VAC to blower motor and protect motor from overloads
4	Contactor size 1 Overload relay Overload relay	KPX7 KPX8 KPX9	Connect 440 VAC to upper accumulator emergency motor and protect motor from overloads
5	Contactor size 1 Overload relay Overload relay	KPX10 KPX11 KPX12	Connect 440 VAC to lower accumulator emergency motor and protect motor from overloads
6	Fuseholders	- - -	Contain and mount fuses
7	Fuseholders	- - -	Contain and mount fuses
8	Control supply transformer	TPZ1	440-volt to 115-volt single-phase step-down transformer and TB7
Bottom Mounting Plate			
9	Terminal boards	- - -	Provide wire connection points
Side Mounting Plate			
10	Capacitors	CAZ5 CAZ6	Dampen inductive voltage in electrical circuits
11	Terminal board	- - -	Provides wire connection points for connecting to ship supply
Center Mounting Plate			
12	Fuseholders	- - -	Contain and mount fuses
13	Fan	BPZ2	Cools four +26-VDC power supplies
14	+26-VDC power supplies	PSZ1 thru PSZ4	Provide dc power for system switches, solenoids, and lights
15	Electronic component assembly	- - -	Applies emergency batteries to power supply inputs during control power failure
16	Rechargeable batteries	PSZ9 thru PSZ11 PSZ18 thru PSZ20	Provide +144-VDC power supply for battery backup system (+24-VDC per battery)
17	Terminal board	TB20	Provides connection point for six +24-VDC batteries
18	Battery chargers	PSZ12 thru PSZ17	Charge six +24-VDC batteries
19	Contactor Contactor size 1 Contactor size 1	KPZ2 KPZ10 KPZ1	Connect 440 VAC to empty case ejector door heater, base ring heater, and gun port shield heater
Top Mounting Plate			
20	Contactor size 3 Overload relay Overload relay Fuseholder	KPX1 KPX2 KPX3	Connect 440 VAC to upper accumulator motor and protect motor from overloads
21	Contactor size 3 Overload relay Overload relay Fuseholder	KPX4 KPX5 KPX6	Connect 440 VAC to lower accumulator motor and protect motor from overloads

controlled gun-laying system functions. The panel has a front door, an angular shelf, and a rear door. The front door and shelf contain the operator's console with switches, indicators, and two telephone jacks.

The back of the front door contains relays, synchros, servtorqs, an emergency tiring circuit card assembly, an alert buzzer, relay pin straighteners, a magnet gage and magnet chargers, indicating lights and displays, a relay test meter, and a door interlock switch (fig. 5-62 and table 5-15). The angular shelf contains

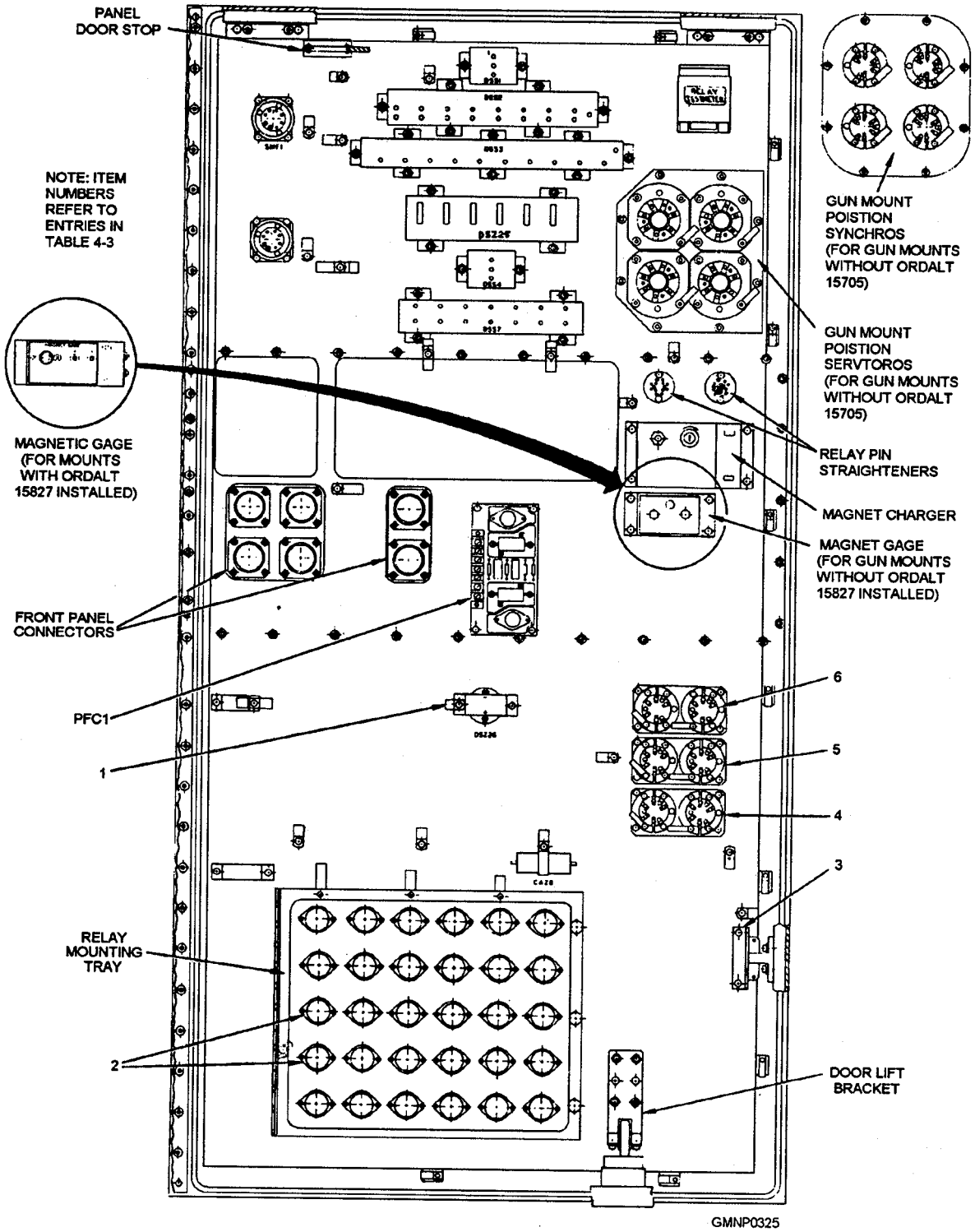

Figure 5-62.—Contro1 panel EP2 (back of front door).

Table 5-15.—Control Panel EP2—Back of Front Door

Item on Fig. 5-62	Name	Purpose
1	Alert buzzer	Sounds audible alarm when mount is assigned but mount ready relay is not energized
2	Relays	Provide for multiple switching
3	Door interlock switch SIZ3	Disconnects +24-VDC lighting from display indications on front of EP2 panel door when door is open
4	Fuze setter safe-set order synchros	Provide safe-set fuze order to fuze setter and fuze setter amplifier
5	Train stow order synchros	Provide a train stow order
6	Elevation stow order synchros	Provide an elevation stow order

the control switches, indicating lights, and digital displays (fig. 5-63).

The inside of the rear door (fig. 5-64 and table 5-16) contains elapsed-time indicators, electromechanical counters, and test plates for train, elevation, and fuze-setting functions. It also contains a circuit card information plate, a power supply test plate, and a lower hoist configuration switch.

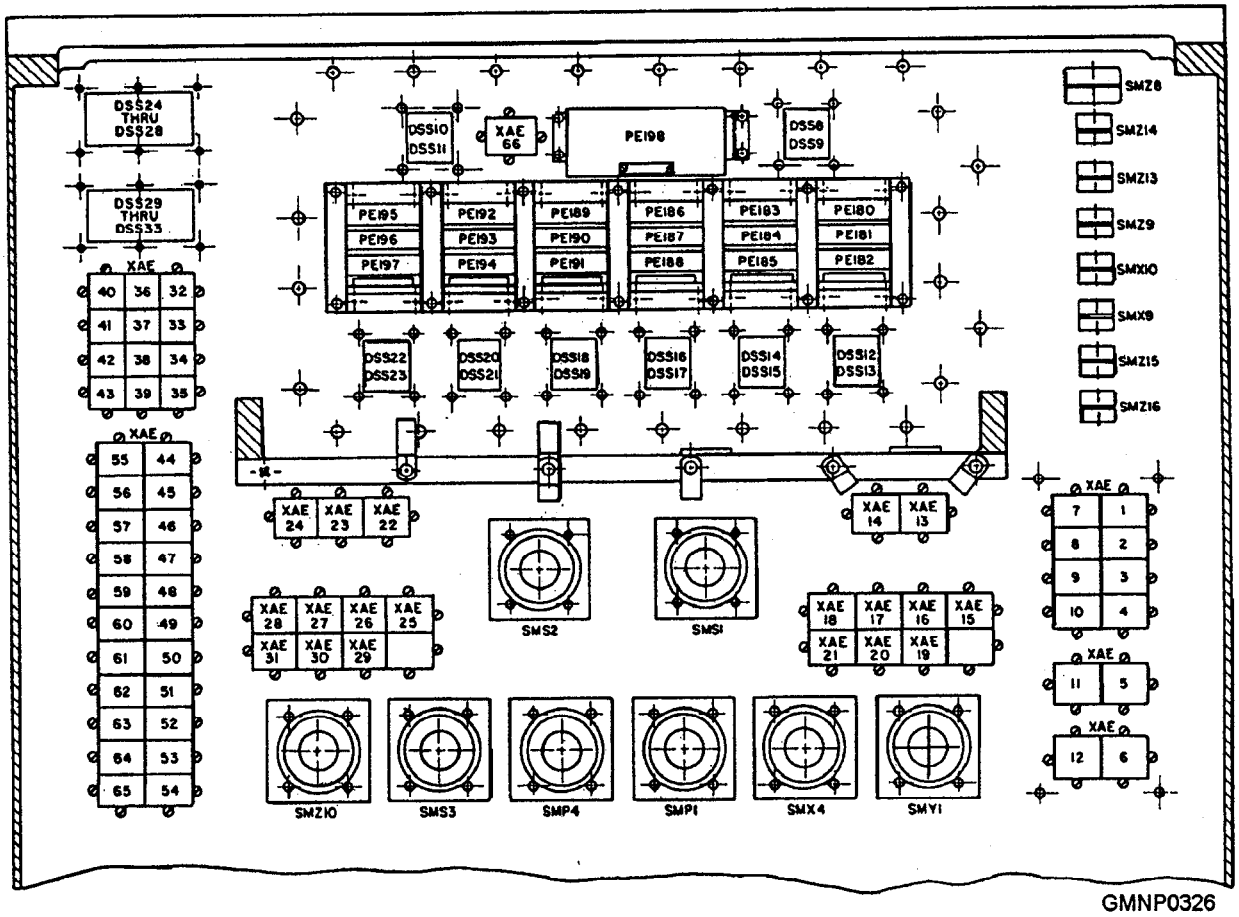

Figure 5-63.—Control panel EP2 (inside of angular shelf).

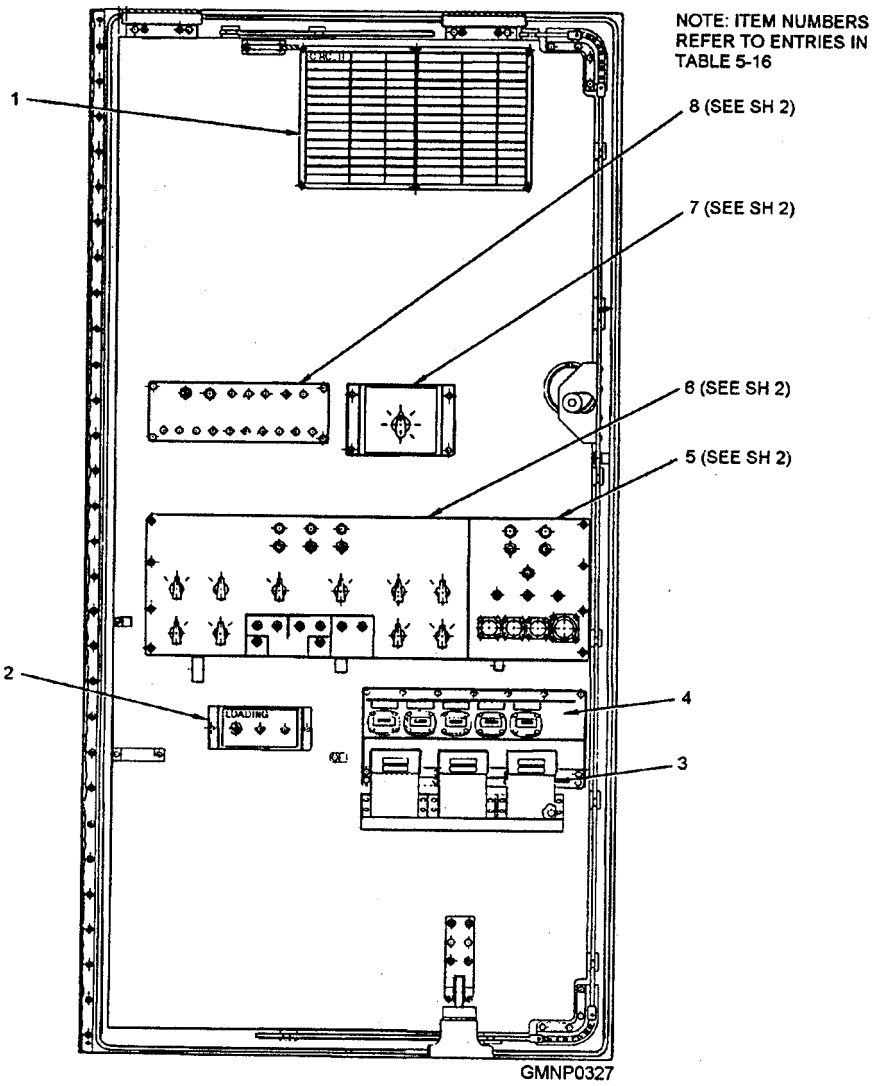

Figure 5-64.—Control panel EP2 (inside rear door) (sheet 1 of 2).

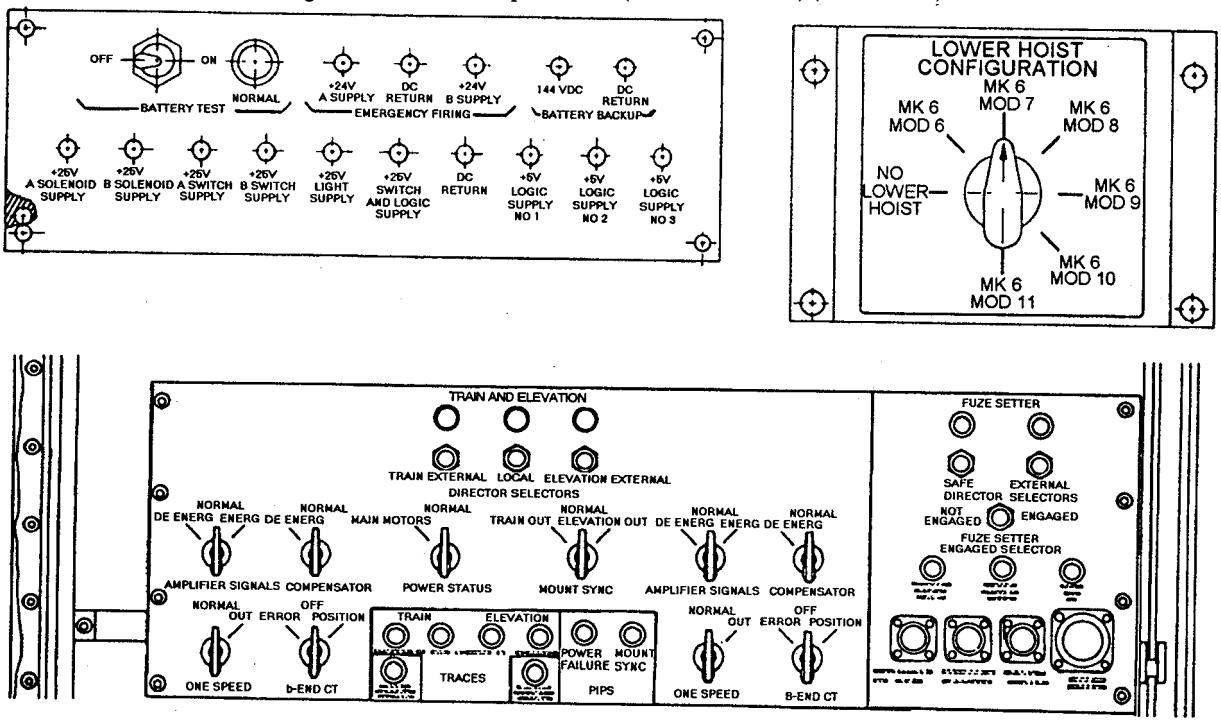

Figure 5-64.—Control panel EP2 (inside rear door) (sheet 2 of 2).

Table 5-16.—Control Panel EP2—Inside of Rear Door

Item on Fig. 5-64	Name/Panel Nomenclature	Purpose
1	Information plate	Locates printed circuit (PG) boards and spares in card rack. Lists PC boards by part number.
2	Loading system traces test plate	Provides a means of recording the velocity and position traces of gun-loading system components.
3	Electromechanical counters	Indicate total number of times: • Loader drum has indexed • Gun was out of battery (simulated) • Gun was out of battery (rounds fired)
4	Elapsed-time indicators	Indicate total elapsed operating times of: • Control supply • Elevation motor • Upper accumulator motor • Lower accumulator motor • Accumulator pressure to fuze setter
5	Fuze-setter test plate	Provides a means of testing the fuze setter.
6	Train and elevation test plate	Provides a means of testing the gun-laying system.
7	LOWER HOIST CONFIGURATION switch SMK4	Provides control system with lower hoist configuration.
8	Power supply test plate	Provides a and b: a. Jacks for access to outputs of dc power supplies, emergency firing supplies, and batteries for voltage checks b. Mount for BATTERY TEST switch and BATTERIES TEST—NORMAL indicating light

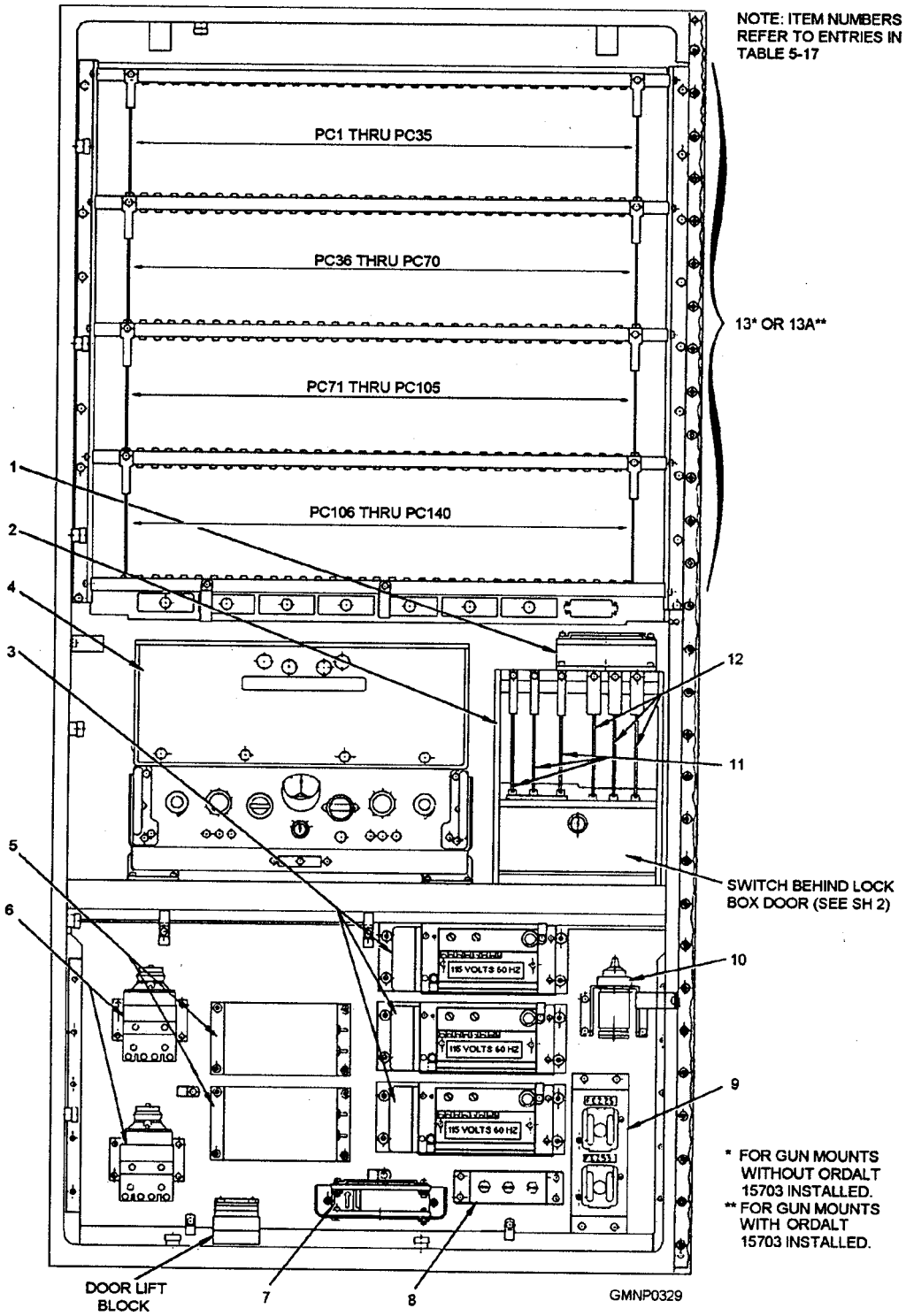

Figure 5-65.—Control panel EP2 (inside rear) (sheet 1 of 2).

The inside rear of the panel case (fig. 5-65 and table 5-17) contains four rows of circuit cards, the train and elevation servo amplifier, the electronic components housing, three +5 VDC power supplies, two time delay relays, two transformers, two fans, three SCRs, two fuseholders, and a synchro control assembly. The electronic components housing contains six circuit cards and, behind the lockbox door, two toggle switches

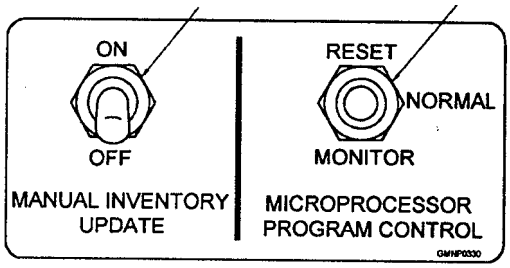

Figure 5-65.—Control panel EP2 (inside rear) (sheet 2 of 2).

Table 5-17.—Control Panel EP2 (Inside Rear)

Item on Fig. 5-65	Name/Panel Nomenclature	Designation	Purpose
1	Fan	BPZ3	Cools circuit cards in card rack
2	Electronic component housing assembly	- - -	Houses auxiliary circuit cards, power distribution circuit card, and fuze-setter amplifier circuit cards
3	+5-VDC power supplies	PSZ21 PSZ22 PSZ23	Supply +5-VDC power for all logic and microprocessor circuits
4	Train and elevation servo control unit	ARY1	Processes train and elevation position error signals and velocity order signals to control the train and elevation power drives
5	Firing transformers	TPF1 TPF2	Step down 115 volts to provide 20 VAC for firing
6	Time delay relays	KTF1A KTF1B	Provide time delay on de-energizing firing circuit
7	Fan	BPZ4	Cools +5-VDC power supplies
8	Silicon-controlled rectifiers (SCR)	CRZ7 CRZ8 CRZ9	Provide +5-VDC external over-voltage clamping
9	Fuseholders (quantity 2)	- - -	Contain fuses for +5-VDC logic supply circuits
10	Zeroing synchro control assembly	GCX1	Zeros the gun loading system test synchro
11	Fuze-setter amplifier circuit card assemblies:		Provide fuze-setter amplifier circuitry
	Attenuation and changeover circuit	PC141	
	Output amplifier	PC142	
	Indexing control and logic circuit	PC143	
12	Circuit card assemblies:		Auxiliary circuit cards provide miscellaneous transistor and triac control circuits. Power distribution circuit card monitors power supply voltage levels
	Auxiliary circuit	PC144	
	Auxiliary circuit	PC145	
	Power distribution	PC146	

Item on Fig. 5-65	Name/Panel Nomenclature	Designation	Purpose
13*	Circuit card assemblies:		Provide control system logic and microprocessor circuits
	Inverter buffer	PC1 thru PC11	
	Buffer	PC13 thru PC21	
	Logic	PC22 thru PC77	
	Dc output driver	PC78 and PC79	
	Latching relay	PC80 thru PC83	
	Timing	PC84 and PC85	
	Input/multiplexer	PC87 thru PC104	
	Relay	PC106 thru PC108	
	Solenoid driver	PC110 thru PC112	
	Light driver	PC113 thru PC122	
	Output	PC126 thru PC130	
	Nonvolatile memory (NVM)	PC131 thru PC133	
	Setter unit receiver	PC134	
	Setter unit transmitter	PC135	
	Fire control interface	PC136	
	8085 Central Processing Unit (CPU)	PC137	
	Memory	PC138	
	Memory	PC139	

*For gun mounts without ORDALT 15703 installed.

Table 5-17.—Control Panel EP2 (Inside Rear)—Continued

Item on Fig. 5-65	Name/Panel Nomenclature	Designation	Purpose
13**	Circuit card assemblies:		Provide control system logic and microprocessor circuits
	Inverter buffer	PC1 thru PC11	
	Buffer	PC13 thru PC21	
	Logic	PC22 thru PC77	
	Dc output driver	PC78 and PC79	
	Timing	PC80 thru PC81	
	Input/multiplexer	PC86 and PC104	
	Relay	PC106 thru PC108	
	Solenoid driver	PC110 thru PC112	
	Light driver	PC113 thru PC122	
	Output	PC126 thru PC130	
	Nonvolatile memory (NVM)	PC131 thru PC133	
	Setter unit receiver	PC134	
	Setter unit transmitter	PC135	
	Fire control interface	PC136	
	8085 Central Processing Unit (CPU)	PC137	
	Memory	PC138	
	Memory	PC139	
	Memory	PC140	
14	MANUAL INVENTORY UPDATE switch	SMX34	Places system in manual update mode
15	MICROPROCESSOR PROGRAM CONTROL switch	SMS4	Resets microprocessor or places microprocessor control in monitor program for engineering diagnostic interrogation via external monitor

**For gun mounts with ORDALT 15703 installed.

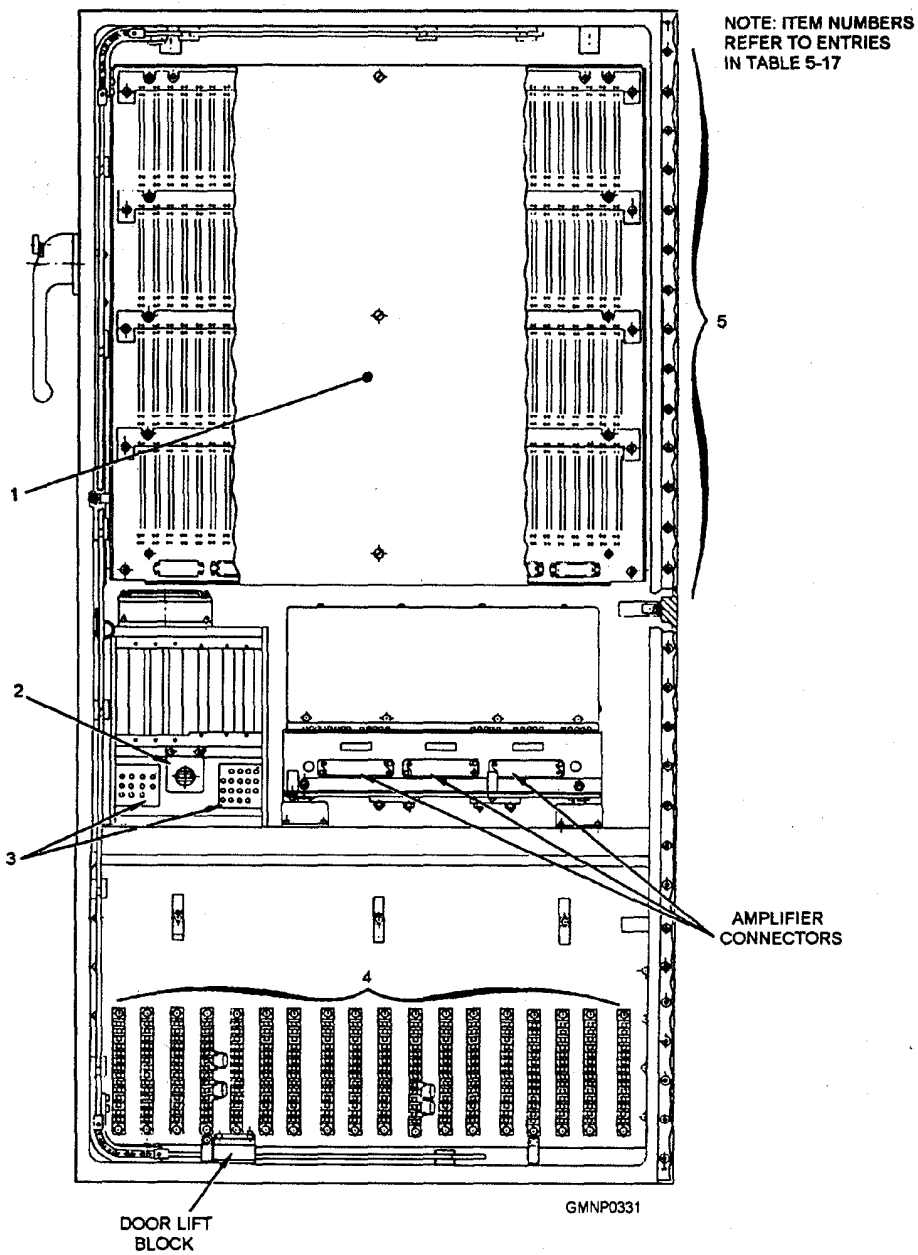

Figure 5-66.—Control panel EP2 (inside front).

(fig. 5-65, sheet 2). The inside front of the panel case (fig. 5-66 and table 5-18) has a covered wire-wrap backplane, 18 terminal boards, a fuseholder, and two transformers,

Table 5-18.—Control Panel EP2 (Inside Front)

Item on Fig. 5-66	Name	Purpose
1	Backplane cover	Protects connector pins on backplane
2	Fuseholder	Contains fuse for fuze-setter amplifier 115-VAC 400-Hz synchro power
3	Fuze-setter transformers TCP1 and TPP1	TPP1 provides 400-Hz step-down power for fuze-setter amplifier. TCP1 provides negative and positive phasing of 1X synchro order signals for use by fuze setter amplifier.
4	Terminal boards (quantity 18)	Provide wire connection points
5	Wire-wrap backplane assembly	Provides point-to-point connection between circuit boards

TRAIN AND ELEVATION LOCAL CONTROL UNIT

The train and elevation local control unit (refer to fig. 5-59) is on top of the EP2 panel. It contains the gun mount position synchros used when exercising and testing the train and elevation systems. The control unit also contains four synchros (fig. 5-67) and the gearing which produce train and elevation order signals.

DISPLAY PANEL EP3

Display panel EP3 (refer to fig. 5-59) contains only those components mounted on the front panel face. All indicators are protected by a sealed waterproof door. The door can be unlatched and swung down for easy access to burned out light bulbs.

GUN MOUNT CONTROL SYSTEM COMPONENTS

Components of the gun mount control system are located throughout the gun mount (fig. 5-68 and table 5-19), generally near the equipment with which the component functions. Connection boxes throughout the gun mount interconnect the panels with motors, proximity switches, photocells, solenoids, the fuze setter, anti-icing heaters, and the firing pin. Many of the control system components were discussed in the beginning of this chapter. Only a brief description will be given on how they interact on the control system of the Mk 45.

Solenoid units controlled by control circuits initiate gun loading and unloading cycles. Control circuit interlock switches sense component and round positions. Control switches select modes of control (AUTO, STEP) and type of operation (LOAD, UNLOAD, and so on). Circuit cards contain electrical and logic circuits that use interlock and control switch input signals to trigger solenoids; logic and electrical circuits also control the fuze setter. Indicating lights on the panels indicate equipment and round position, switch status (activated, deactivated), and solenoid status (energized, de-energized). Segmented readout displays give numerical quantities that represent rounds of each type in the loader and test or fault codes. A wire- wrap backplane contains pins and connectors to interface the circuit cards.

Connection Boxes

Connection boxes serve as terminals for cabling between EP2 and the switches, solenoids, fuze setter, and firing pin. There are two types of connection

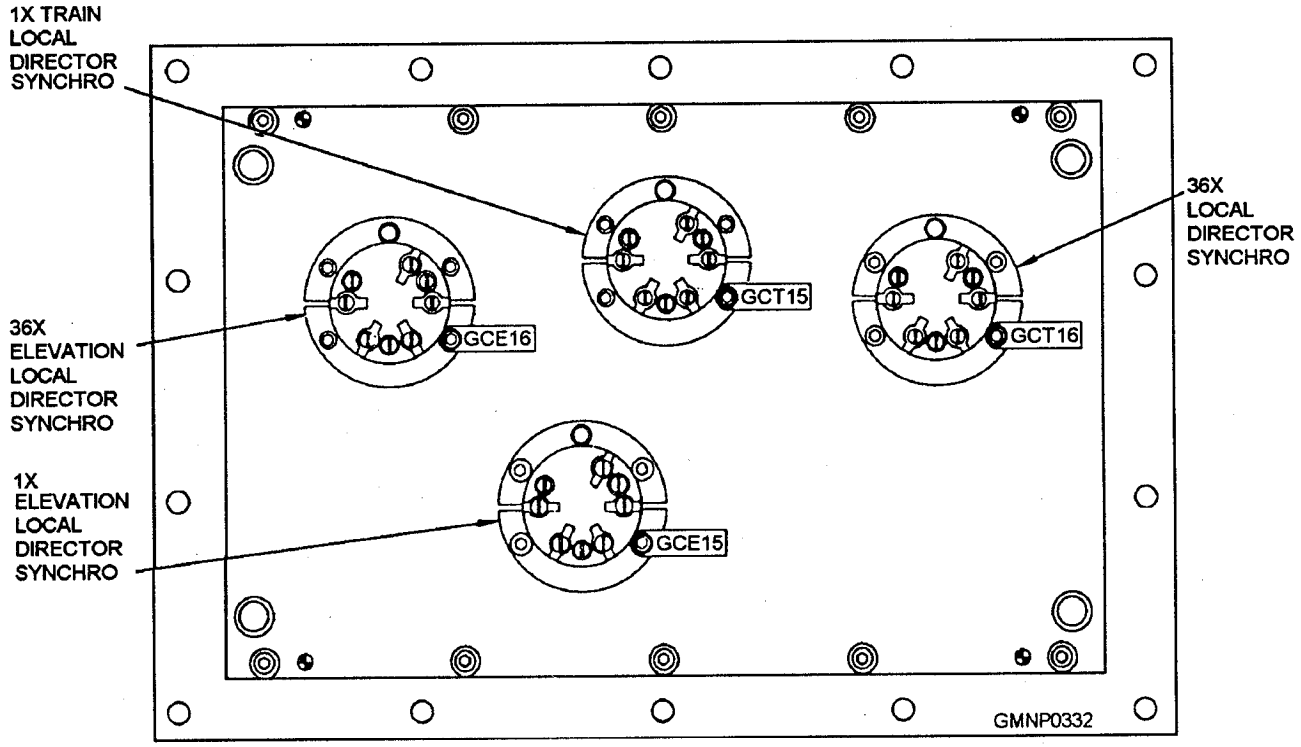

Figure 5-67.—Train and elevation local control unit, back of panel.

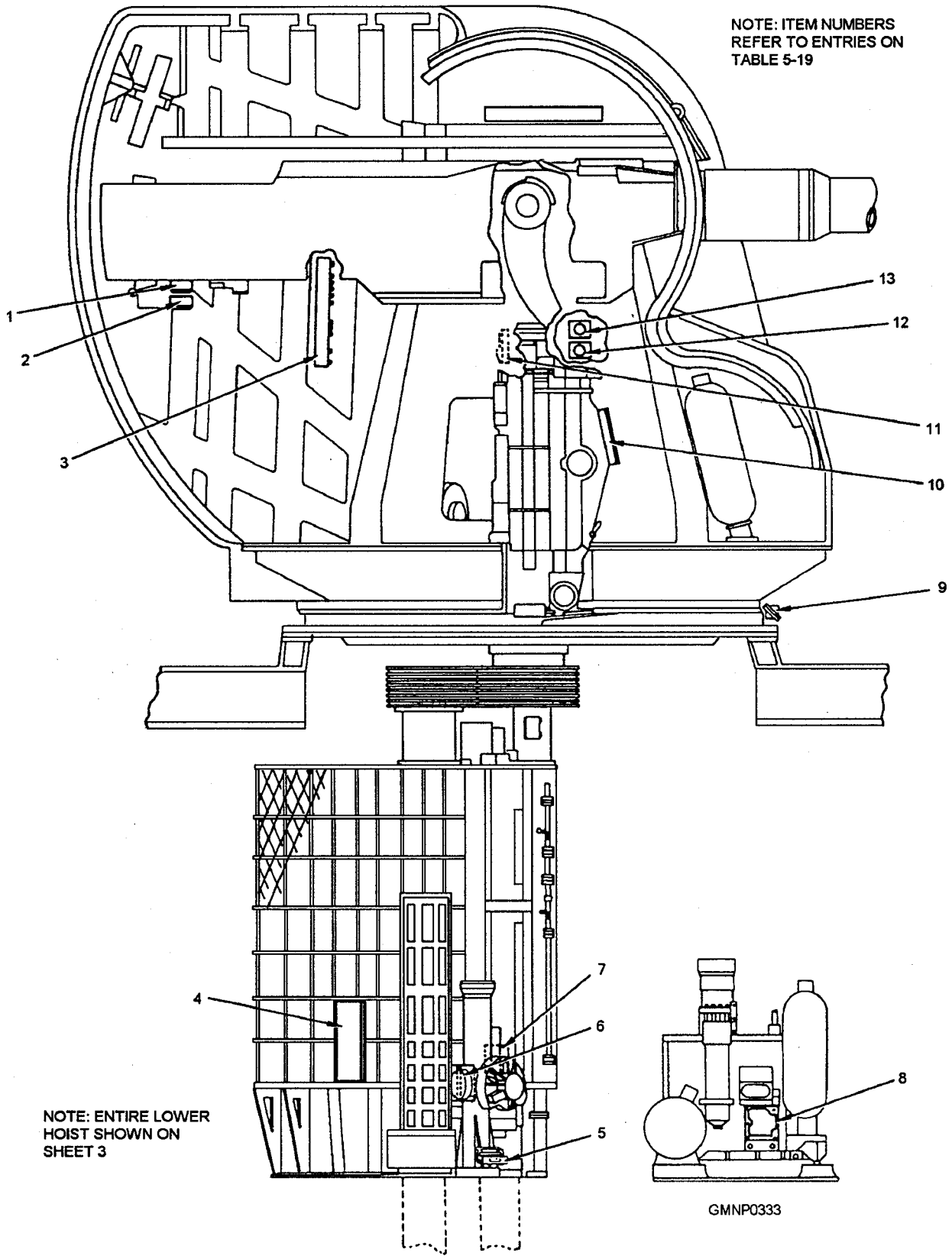

Figure 5-68.—Gun mount control system components (sheet 1 of 3).

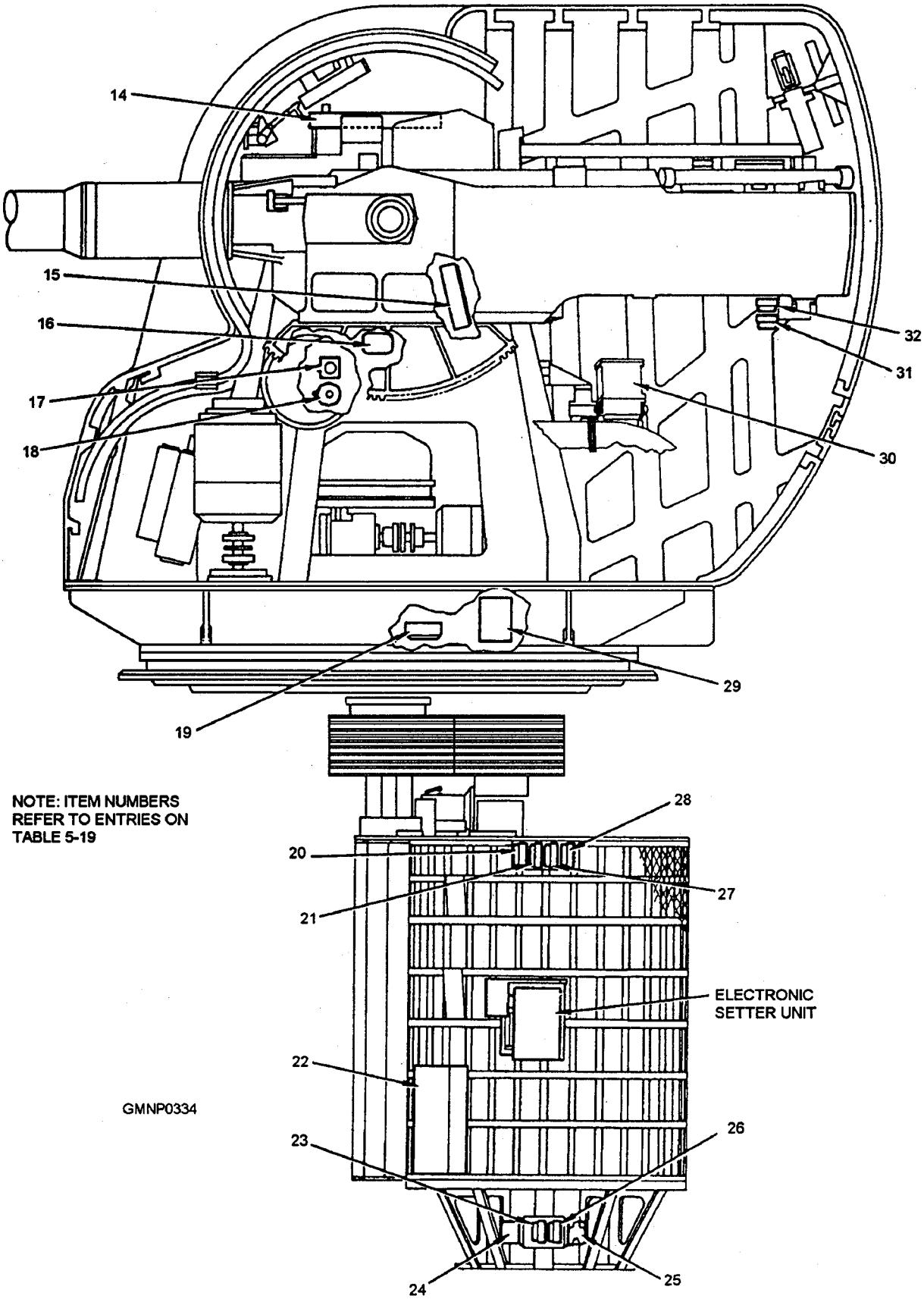

Figure 5-68.—Gun mount control system components (sheet 2 of 3).

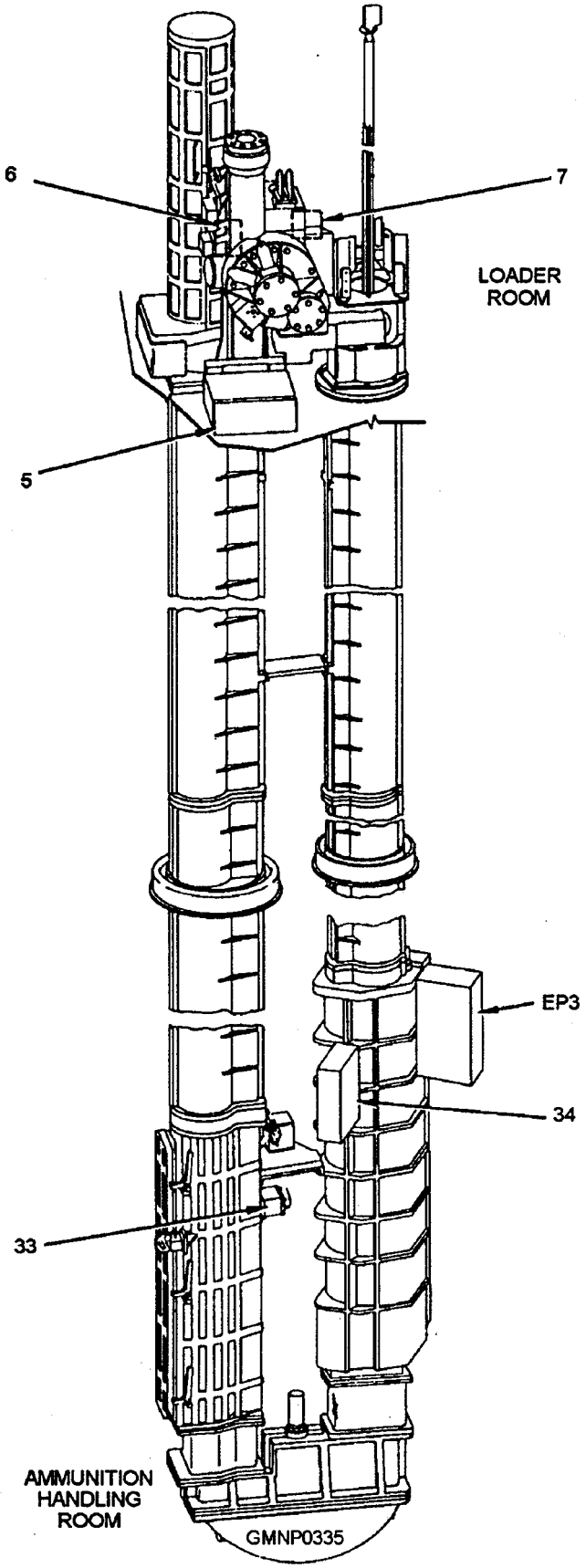

Figure 5-68.—Gun mount control system components (sheet 3 of 3).

Table 5-19.—Gun Mount Control System Components

Item on Fig. 5-68	Designation	Connection Box/Solenoid Unit	Location
1	LHB1	Breech open-close	Left slide
2	LHR1	Rammer extend-retract	Left slide
3	EBX4	Distribution box	Left shield
4	EBX3	Jack box	Loader drum
5	EBX9	Jack box	Front of hoist drive
6	LHK2	Engage-disengage lower hoist latch and coupling	Ammunition hoist
7	LHK1	Lower hoist rack extend	Ammunition hoist
8	LHX2	Lower accumulator dump valve	Lower accumulator
9	- - -	Observer control jack	Base ring
10	EBX7	Jack box	Cradle
11	LHX1	Upper accumulator dump valve	Left trunnion
12	- - -	Telephone jack	Left door
13	- - -	Receptacle	Left door
14	EBX8	Jack box	Right slide
15	EBX5	Jack box	Right trunnion
16	LHE1	Elevation power-off brake-release	Right trunnion
16	LHT1	Train power-off brake-release	Right trunnion
17	- - -	Receptacle	Right door
18	- - -	Telephone jack	Right door
19	LHC1	Cradle raise-lower	Right carriage
19	LHC2	Positioner pawl retract	Right carriage
20	LHP2	PA to fuze setter	Top of loader drum
21	LHP1	Fuze setter extend-retract	Top of loader drum
22	EBX2	Jack box	Bottom of loader drum
23	LHL3	Loader drum counterclockwise	Bottom of loader drum
24	LHL2	Loader drum clockwise index	Bottom of loader drum
25	LHL4	Transfer station positioner	Bottom of loader drum
26	LHH1	Upper hoist raise-lower	Bottom of loader drum
27	LHL5	Transfer station ejector extend-retract	Top of loader drum
28	LHL1	Loading station ejector extend-retract	Top of loader drum
29	EBX6	Terminal box	Right carriage
30	- - -	Electrical components assembly	Top of ventilation system duct
31	LHM1	Empty case tray raise and lower	Right slide
32	LHM2	Empty case ejector extend-retract	Right slide
33	- - -	Telephone jack	Back of strike-down unloading station
34	EBX1	Jack box	Back of lower loading station

boxes-jack boxes (fig. 5-69) and terminal boxes (fig. 5-70). Some boxes also serve as connection points for distributing electrical power from EP1 to the lights, the heaters, and the motors.

Solenoid Units

The solenoid units (refer to fig. 5-14) convert an electrical signal from logic circuits into a hydraulic output, which initiates a mechanical motion. Each solenoid unit consists of two coils, a lever arm, a circuit board, a pilot valve, and a housing with a cover and cable jack. These solenoid units are often mounted on a solenoid valve assembly. Six separate solenoid valve assemblies, each with up to four solenoid units, are mounted at various points on the gun mount.

Interlock Switches

An interlock switch electrically indicates the position of a component or the position of a round of ammunition. The gun mount has two main types of external interlock switches—the proximity switch and the optical switch (refer to fig. 5-7).

EXTERNAL PROXIMITY SWITCH.— The proximity switch is a straight (or 90-degree) metal tube with threads on one end, a hex nut area around the center, and a cable jack at the other end. The switch element, which is sensitive to a magnetic field, is in the threaded end. A magnet, generally moved by a lever, slide, or cam, activates or deactivates the proximity switch.

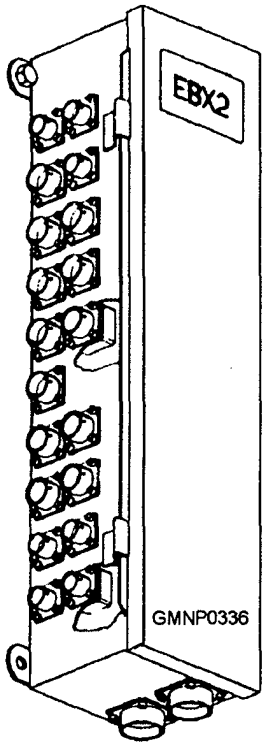

Figure 5-69.—Jack hex.

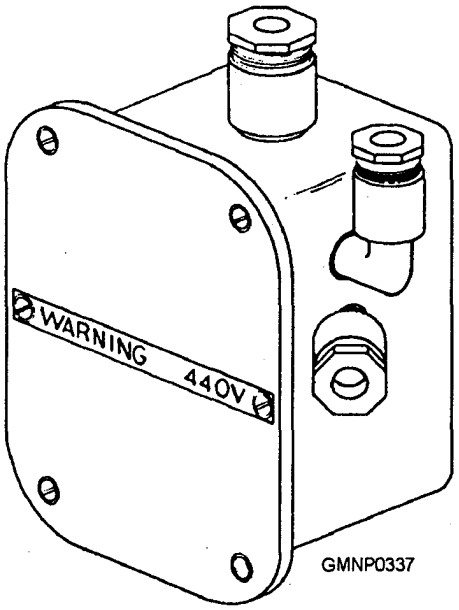

Figure 5-70.—Terminal box.

OPTICAL SWITCH.— The optical switch, used on the lower and upper hoist, is a straight (or 90-degree) metal tube with a mounting flange near one end and a cable jack at the other end. An identically shaped transmitter unit, aimed directly at the optical switch (detector unit), sends pulses of infrared light to the detector unit. The modulated infrared detector circuit then activates the optical switch output. When a projectile, powder case, or other obstruction interrupts the light path, the switch deactivates.

Control Switches

Control switches on the EP2 are used by the EP2 operator to select, start, and stop various equipment operations. Three types of control switches are used—the light-e milling diode (LED) switch/indicator assembly (fig. 5-7 1) or the switch/indicator assembly

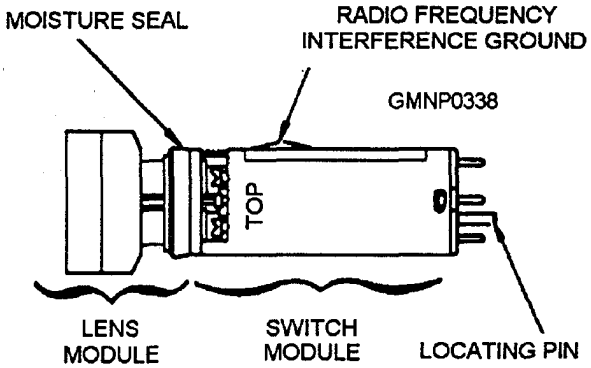

Figure 5-71.—Light-emitting diode switch/indicator assembly.

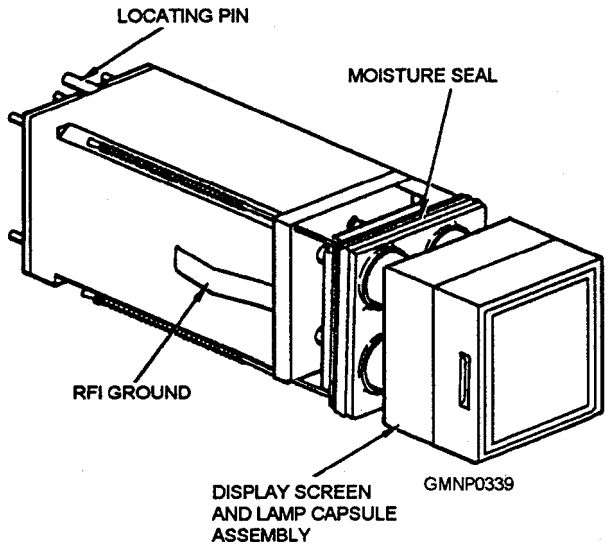

Figure 5-72.—Switch/indicator assembly.

(fig. 5-72), the thumbwheel switch (fig. 5-73), and the rotary switch (fig. 5-74).

LIGHT-EMITTING DIODE SWITCH/ INDICATOR ASSEMBLY.— The LED switch/indicator assembly (refer to fig. 5-71) is a rack-mounted, plug-in type, lighted push-button switch and LED indicating light assembly with a display face. The assembly consists of a switch module and a lens module.

The switch module contains a radio interference (RIF) ground and a momentary-type action switch that closes switch contacts whenever the lens module is pressed. A locating pin at the base of the switch module ensures that the LED switch/indicator assembly can only be plugged into the panel-mounted rack in one direction to avoid damaging the LEDs contained inside the lens module. The lens module contains LEDs which are isolated from the switch contacts and, therefore, are independently controlled. The lens module permanently connects to the switch module. The lens module contains a colored (red, green, or amber) LED capsule seal.

SWITCH/INDICATOR ASSEMBLY.— The switch/indicator assembly (refer to fig. 5-72) is a rack-mounted, plug-in type, lighted push-button switch or indicator light assembly with a display face. The push-button unit has a momentary-type action that transfers switch contacts whenever the front lens is pressed. Indicator lamps are isolated from the switch contact and, therefore, are independently controlled. However, the indicator light feature is not used in all push-button units.

The display screen and lamp capsule assembly permanently connects to the basic unit. This assembly contains a legend lens, color filters, a radio frequency interference (RFI) protective screen, and four light bulbs. When the display screen and lamp capsule is pulled out, light bulbs are immediately accessible for replacement. The remaining lens, falters, and screen are accessible by sliding the lens retainer housing upward.

THUMBWHEEL SWITCHES.— Two types of rotary thumbwheel switches are used on the EP2 panel-local electronic fuze order switches and type assignment switches (refer to fig. 5-73). Each thumbwheel dial contains one layer of multiple contact points; each contact point connects to a common wiper for a given dial position. The numerical thumbwheel dials have 10 positions; the round assignment thumbwheel dials have 12 positions. No position stops exist for any of the dials. All thumbwheel switches are water and dust protected by a hinged transparent

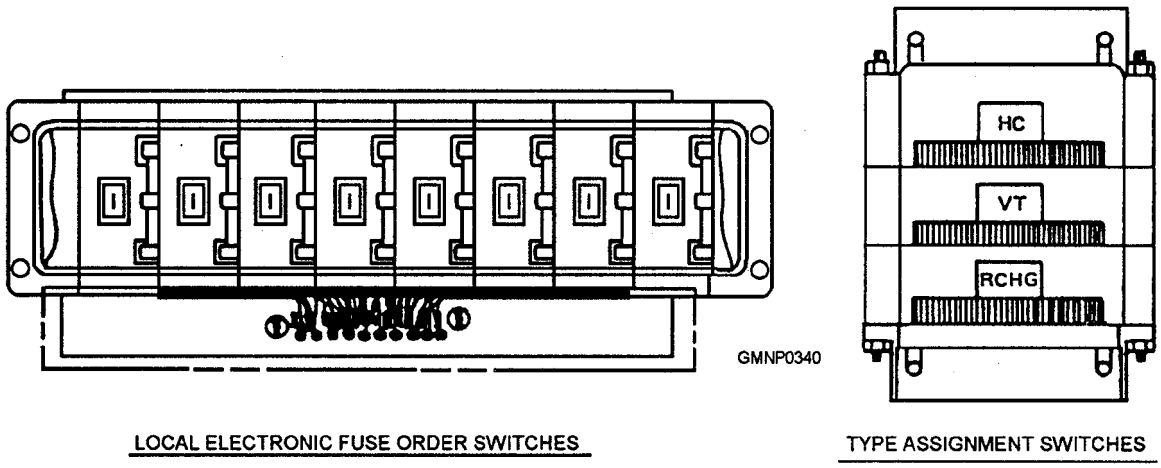

Figure 5-73.—Thumbwheel switches.

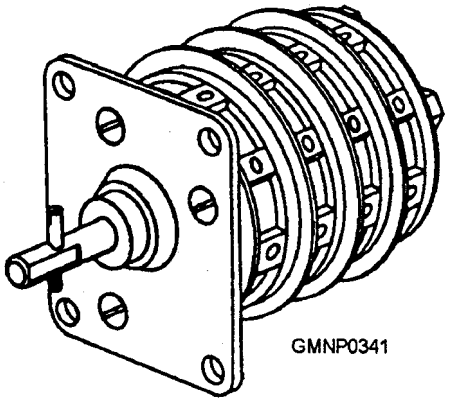

Figure 5-74.—Rotary switch.

covering (bezel assembly). The covering screws down tightly whenever dial positions are not being changed.

ROTARY SWITCH.— The rotary switch (refer to figs. 5-3 and 5-74) contains layers of multiple contacts. The layers are mounted in a circular pattern inside a cylindrical housing which has external connectors. Rotary switches have from two to seven layers of enclosed contacts and from two to six possible switch positions.

Circuit Cards

The circuit cards (fig. 5-75) contain the transistors, integrated circuits, capacitors, diodes, and other electronic components. These rectangular fiberglass

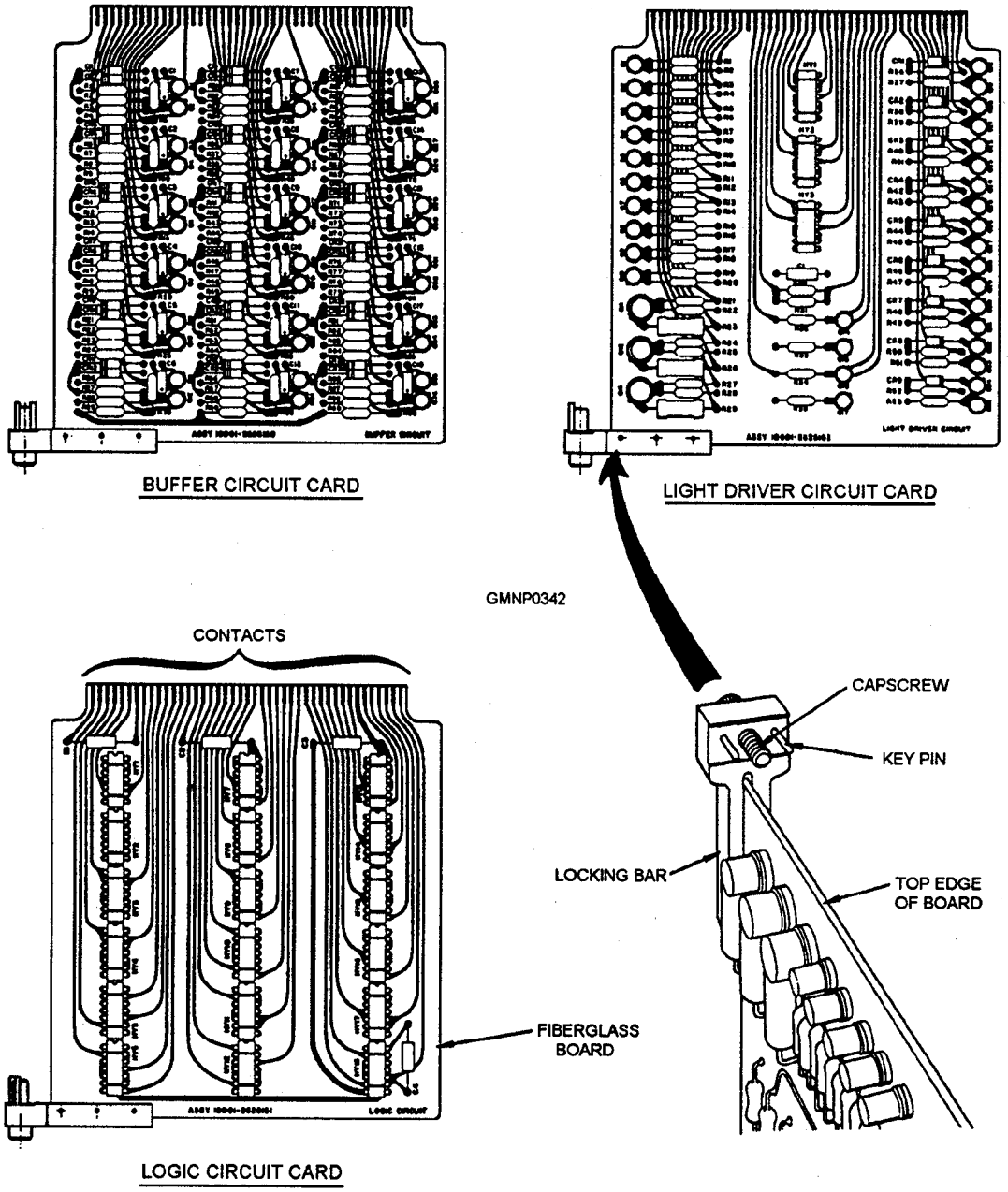

Figure 5-75.—Circuit cards.

cards, coated with a clear epoxy insulating lacquer, have printed conductors and contacts on both sides.

The top and bottom edges of the card slide in mounting channels that guide the contacts into a circuit card connector in the circuit card rack. Key pins in a locking bar on a comer of the circuit card prevent the wrong circuit card from being inserted into a connector. A cap screw on the locking bar locks the card into place.

The circuit card rack in EP2 holds four rows of circuit cards, including the microprocessor CPU circuit card and all microprocessor-associated cards. Other circuit card racks include the electronic components housing located in EP2 which holds six cards; the circuit card housing in EP1 which holds three cards; and the electrical components housing on the ventilation system duct which holds three circuit cards.

Indicating Lights

The three types of indicating lights used on the panels are indicator lights, indicator lamps, and LEDs. The indicator lights used on EP1 indicate that an electrical circuit is energized and that power is available. The indicator light has a step-down transformer in the base to reduce the supply voltages from EP1 to the 2 volts needed for the two bulbs in each indicator light.

Indicator lamps are used on EP2 as operational sequence indicators, mount-ready status indicators, and warning indicators. Indicator lamps contain from 3 to 16 lights, with each light illuminated by two 28-volt bulbs. For some older gun mounts these indicator lamps on EP2 are replaced with LEDs.

On older mounts, LEDs on EP2 are limited to the weapons control round order display. These LEDs are mounted on one circuit card assembly containing the necessary current-limiting resistors and using a +5 VDC power supply.

Segmented Readout Displays

The segmented readout displays (fig. 5-76) are two- and five-digit numerical readouts located on EP2. The two-digit displays indicate round quantities loaded in the loader drum and lower hoist. The five-digit displays are used along with the built-in-test features of the control system (refer to fig. 5-19) for troubleshooting.

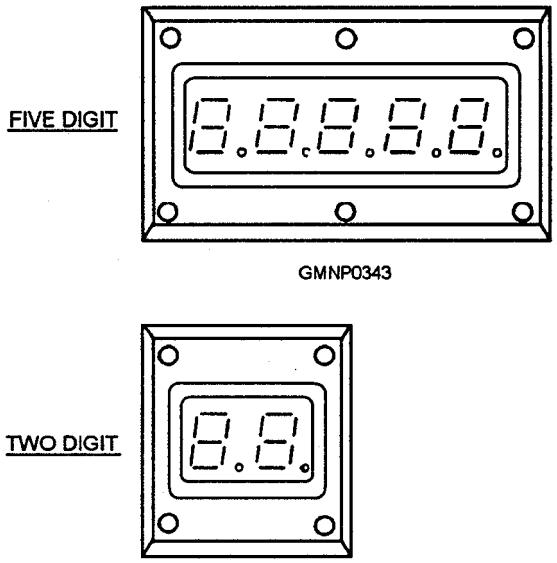

Figure 5-76.—Segmented readout displays,

Wire-Wrap Backplane

The wire-wrap backplane (fig. 5-77) is a wiring board inside EP2 that interfaces circuit cards PC1 through PC140. The backplane contains circuit card receptacle connectors, backplane connectors, pins, wires, and a board. Wires are wrapped around pins providing electrical connection between circuit cards and between the circuit cards and the backplane connectors located at the bottom of the assembly. The backplane connectors provide external interfacing for all control signals leaving or entering the backplane as well as the +5 VDC and +25 VDC power supplies

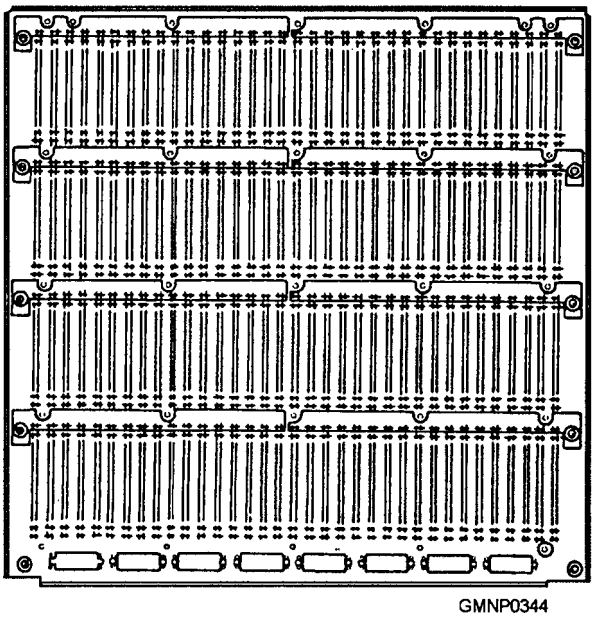

Figure 5-77.—Wire-wrap backplane.

needed by the circuit cards. A large cover which mounts on the backplane protects the wire-wrap pins and wires.

SOLID-STATE CONTROL CIRCUIT OPERATION

LEARNING OBJECTIVE: Recall general information concerning operation of a Mk 13 Mod 4 GMLS solid-state control circuit.

We will now describe the operation of an actual solid-state control circuit. Our example comes from the Mk 13 Mod 4 GMLS and pertains to the retractable rail of the launcher.

The normal position of the retractable rail is to be extended, ready for launcher loading. When the GMLS is in auto-load mode, the rail retracts automatically during two operations: (1) missile firing and (2) dud jettisoning. When the GMLS is in step control, the rail can be retracted in two modes: (1) step-load and (2) step-exercise. Usually the rail is not retracted during step-load operations. However, in conjunction with a step-jettison operation, a loaded rail can be retracted if required. Bear in mind, this operation is not a normal circumstance, but it is available. In step-exercise, the rail must be empty/not loaded during a retract cycle. Depressing the correct push button on the EP2 console initiates the desired operation.

Figure 5-78 shows the schematic used to retract the launcher rail electrical y. Take a moment to review the drawing. Some of the items you should notice include the following:

1. A variety of AND, OR, and OR-AND logic gates. Refer to table 5-2 as we go through these gates. There are no polarity indicators (flags) used.

2. A latching relay and a solenoid driver circuit are used.

3. A +5-volt dc logic supply controls the +26-volt dc (+25-volt dc backup) relay, solenoid, and miscellaneous power supplies.

RETRACT LAUNCHER RAIL

Retracting the launcher rail during a missile firing does not (directly) involve the solid-state circuit in figure 5-78. After the rocket motor of the missile ignites, the round travels about 20 inches up the rail. The forward missile shoe contacts the retract trigger located on the underside of the rail. The trigger shifts (or cams) a valve to start the hydraulic-mechanical actions that move the rail. The rail retracts to provide clearance for the tail-control surfaces of the missile as the round leaves the launcher.

However, in dud jettison, step-load, or exercise operations, the solid-state circuit is directly involved in initiating a retract cycle. Solid-state interlocks are used to ensure equipment conditions are correct before energizing the retract launcher rail solenoid LHL1-LC1. The solenoid, located in the guide arm, then initiates the hydraulic-mechanical actions to retract the rail.

Auto-Not-Unload Circuit (Jettison)

The auto-not-unload circuit is the primary signal path used to retract the launcher rail. The object of this circuit is to energize relay coil PC67-K5A, RETRACT LAUNCHER RAIL CYCLE (SET) (DETENTED). When the A- or set-coil energizes, the PC67-K5 contacts close. This action applies a +5-volt input signal to LHL1-LC1's solenoid driver circuit. The solenoid driver circuit activates and energizes the LC1 coil.

The following logic gate inputs must be satisfied to energize PC67-K5A. They are listed (and explained) by groups for ease of presentation. Locate them in figure 5-78.

GROUP A:

1. SIR1-1—Launcher rail loaded

2. SIR3-1—Contactor and fin opener cranks disengaged

3. QCY5-1—Dud jettison

4. QCX7-1—Auto-not-unload selected

GROUP B:

1. SIA1-1—Arming device extended and forward-motion latch unlocked

2. KPX4-1—Launcher power unit motor contactor energized

3. SIN1-2—Not strike-down fixture on launcher

GROUP C:

1. SIL1-2—Not launcher rail retracted

2. PC67-K9B-1—Harpoon missile safe (detented)

3. PC67-K6-2—Not extend launcher rail cycle (detented)

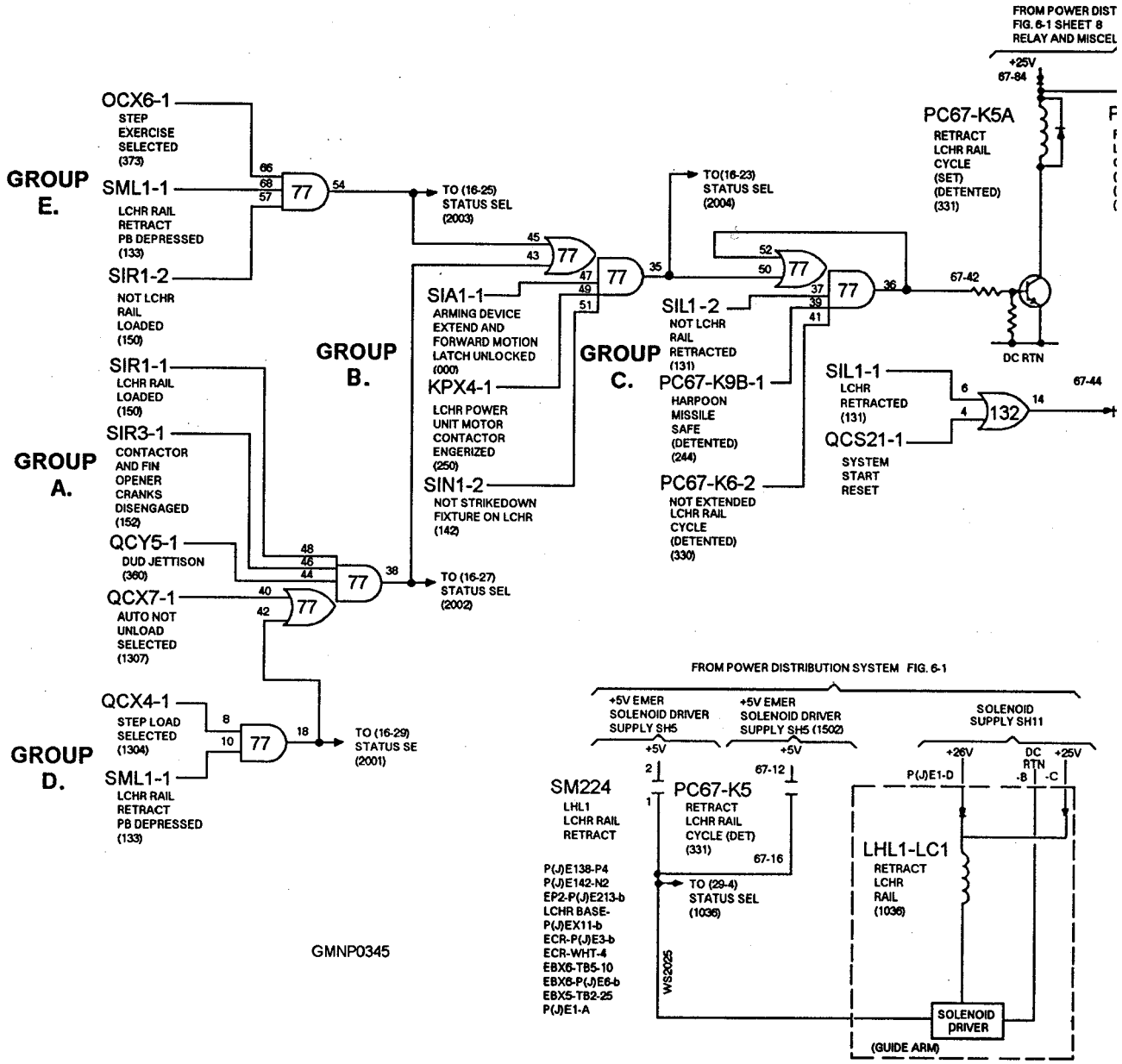

Figure 5-78.—Retract launcher rail schematic; Mk 13 Mod 4 GMLS retractable rail.

GROUP A INPUTS.— Input SIR1-1 ensures that the launcher rail does not retract during a jettisoning operation unless the guide arm is loaded. The aft missile shoe contacts the rail-loaded indicator plunger. The plunger moves an actuator into proximity with launcher rail loaded switch SIR1. The switch activates and applies an input signal to an inverter-buffer circuit. The output line 1 of the circuit goes high. This high is applied to the OR-AND gate at 77-48.

Input SIR3-1 ensures the contactor and fin opener arm assembly has disengaged from the missile before the launcher rail retracts. Proximity switch SIR3 is activated and, through its inverter-buffer circuit, applies a high to gate input 77-46.

Input QCY5-1 ensures that dud jettison summary circuit QCY5 is activated. A summary circuit summarizes a variety of different input conditions into one output statement. The QCY5-1 input to 77-44 will be high when remote dud jettison pointing or local dud jettison pointing is selected.

Input QCX7-1 is high when auto-not-unload selected summary circuit QCX7 is activated. This signal is applied to 77-40 when the control system is placed in automatic control and the not-unload mode.

The step-load related input to 77-42 is low at this time. With four high inputs to the OR-AND gate, a high is produced at output 77-38. The high output is used as an input to 77-43, the next OR-AND gate.

GROUP B INPUTS.— Input SIA1-1 ensures the launcher rail does not retract until two equipment conditions are met. The arming device must be extended and the forward-motion latch must be unlocked. When these two conditions are satisfied, proximity switch SIA1 and its inverter-buffer circuit apply to high to 77-47.

Input KPX4-1 ensures the launcher power unit (LPU) motor contactor is energized. When the contactor is energized, the electric motor drives a hydraulic pump. The LPU supplies the required hydraulic fluid pressure to operate the launcher guide and blast door components. The high signal is applied to 77-49.

Input SIN1-2 ensures the launcher rail does not retract if the strike-down fixture is installed on the guide arm. If the fixture is not on the arm, an actuating lever is not in proximity with SIN1. The switch deactivates and its inverter-buffer circuit provides a high output on line 2. This high is applied to 77-51.

The step-exercise related input to 77-45 will be low at this time. The four high inputs at the OR-AND gate will produce a high output at 77-35. The high is then applied to 77-50.

GROUP C INPUTS.— Input SIL1-2 ensures that the circuit to LHL1-LC1 de-energizes after the launcher rail retracts. When the rail is in the extended position, a magnetic actuator is not in proximity with SIL1. The switch is deactivated and a high signal from output 2 of the inverter-buffer is applied to 77-37.

Input PC67-K9B-1 ensures a Harpoon missile has been disarmed and is safe to jettison. The Harpoon booster is electrically disarmed through a signal circuit of the 23-pin missile-to-launcher contactor. When this disarming is accomplished, PC67-K9B-1, Harpoon missile safe (reset) (detented) relay coil will energize. The input to 77-39 will go high.

Input PC67-K6-2 ensures an extend launcher rail cycle is not in progress. This action prevents LHL1-LC1 from energizing until an extend cycle has been completed. This high input is applied to 77-41.

The logic gate activates with four high inputs and produces a high at 77-36. A latching circuit (or holding circuit) is established by the high output at 77-36 feeding back to input 77-52. The latching circuit is used to keep the logic circuit energized whenever the launcher rail is retracted in exercise mode. That is required because the console operator will release the RETRACT push-button switch of the rail before the retract cycle ends.

The high signal from 77-36 is also used to forward bias the NPN transistor at 67-42. The transistor conducts and PC67-K5A relay coil energizes. When the contacts of the relay close, a high input signal is applied to the solenoid driver circuit. The LC1 solenoid energizes and initiates the hydraulic-mechanical actions to retract the launcher rail.

COMPLETING THE RETRACT CYCLE.— When the launcher rail is fully retracted, proximity switch SIL1 activates. The 1 and 2 outputs from its inverter-buffer affect the retract circuit in two ways. First, the SIL1-2 input (Group C) to OR-AND gate 77-39 now goes low. The change in input status produces a low output at 77-36. The low-output signal turns off the NPN transistor and de-energizes PC67-K5A relay coil. Since it is a detented relay, its contacts remain closed to the LHL1-LC1 solenoid driver.

The second result of SIL1 activating affects OR-gate 132-6. Its SIL1-1 input now goes high. The output signal produced at 132-14 goes high. It turns on the other NPN transistor (67-44) that energizes the PC67-K5B relay coil. This coil, being the reset coil of PC67-K5, causes the contacts of the relay to open. The high input to the solenoid driver of LHL1-LC1 is thereby removed. The solenoid de-energizes and returns to neutral.

The other input to OR-gate 132 is QCS21-1, system start reset. This input is high whenever summary circuit QCS21 is activated. The purpose of summary circuit QCS21 is related to safety. It is activated during system start or turn on procedures. When activated, QCS21 produces a high output. This signal is supplied to every reset coil of all the guide arm component relays. Energizing each reset coil prevents the accidental movement of equipment. After initial light off and when the system is ready to operate, QCS21's output goes low.

Step-Load Circuit

The step-load circuit centers around the two inputs of Group D in figure 5-78. The circuit is used to retract a loaded launcher rail if jettison operations must be performed in step control. Therefore, many of the conditions of an auto-not-unload mode must still be satisfied for the step-load cycle.

When the console operator changes modes, the QCX7-1 (Group A) input to 77-40 goes low. This change effectively disables the entire retract circuit and PC67-K5A cannot be energized. As the console operator switches into step-load, the QCX4-1 (Group D) input to AND gate 77-8 goes high. This action only satisfies one of the required inputs to the circuit.

To retract the launcher rail, the console operator depresses push button SML1. The switch provides an input signal to its buffer circuit. The unflagged output line of the circuit goes high. The high SML1-1 input applied to 77-10 activates the AND gate. It provides a high output at 77-18. This signal satisfies the OR-AND gate's (Group A) inputs and the launcher rail retracts.

Step-Exercise Circuit

The step-exercise circuit centers around the Group E inputs on figure 5-78. When the three input conditions to the Group E AND gate are satisfied, a high is produced at 77-54. The high is applied to 77-45 of the OR-AND gate in Group B. The remaining circuit inputs and operations are the same as a step-load cycle. Notice that all Group A inputs are low at this time and are not used.

Take a minute to review the various retract cycles performed by this solid-state control circuit. It is important that you understand the principles involved.

EXTEND LAUNCHER RAIL

The launcher rail automatically extends following missile firing or jettisoning operations. After the rail is empty, the aft-motion latch and arming device retract. The forward-motion latch also locks in place. These, and other conditions, complete the auto-not-unload circuit to energize extend solenoid LHL1-LC2. The hydraulic-mechanical actions are then initiated to re-extend the rail. In step-load and exercise modes, depressing the extend push button initiates the circuit to energize LHL1-LC2.

We will not go into a detailed analysis of the extend circuit shown in figure 5-79. It is very similar to the retract circuit in terms of logic gate operation and sequence of events. Refer to figure 5-78 as the following paragraphs describe the various signal paths.

Auto-Not-Unload Circuit

The following logic inputs are involved with the extend auto-not-unload circuit. Locate them and trace their outputs on figure 5-79.

1. QCX7-1—Auto-not-unload selected
2. QCY1-2—Not aim
3. SIR1-2—Not launcher rail loaded
4. SIA2-1—Arming device retracted and forward-motion latch locked
5. SID2-1—Dud jettison retracted
6. KPX4-1—Launcher power unit motor contactor energized
7. PC67-K5-2—Not retract launcher rail cycle (detented)
8. SIL2-2—Not launcher rail extended
9. SIL2-1—Launcher rail extended
10. QCS21-1—System start reset

When the first eight inputs in the above list are satisfied (high), PC67-K6A will energize. Its contacts close to activate the solenoid driver circuit. LHL1-LC2 solenoid coil energizes and the launcher rail extends. When the rail is extended, proximity switch SIL2-1

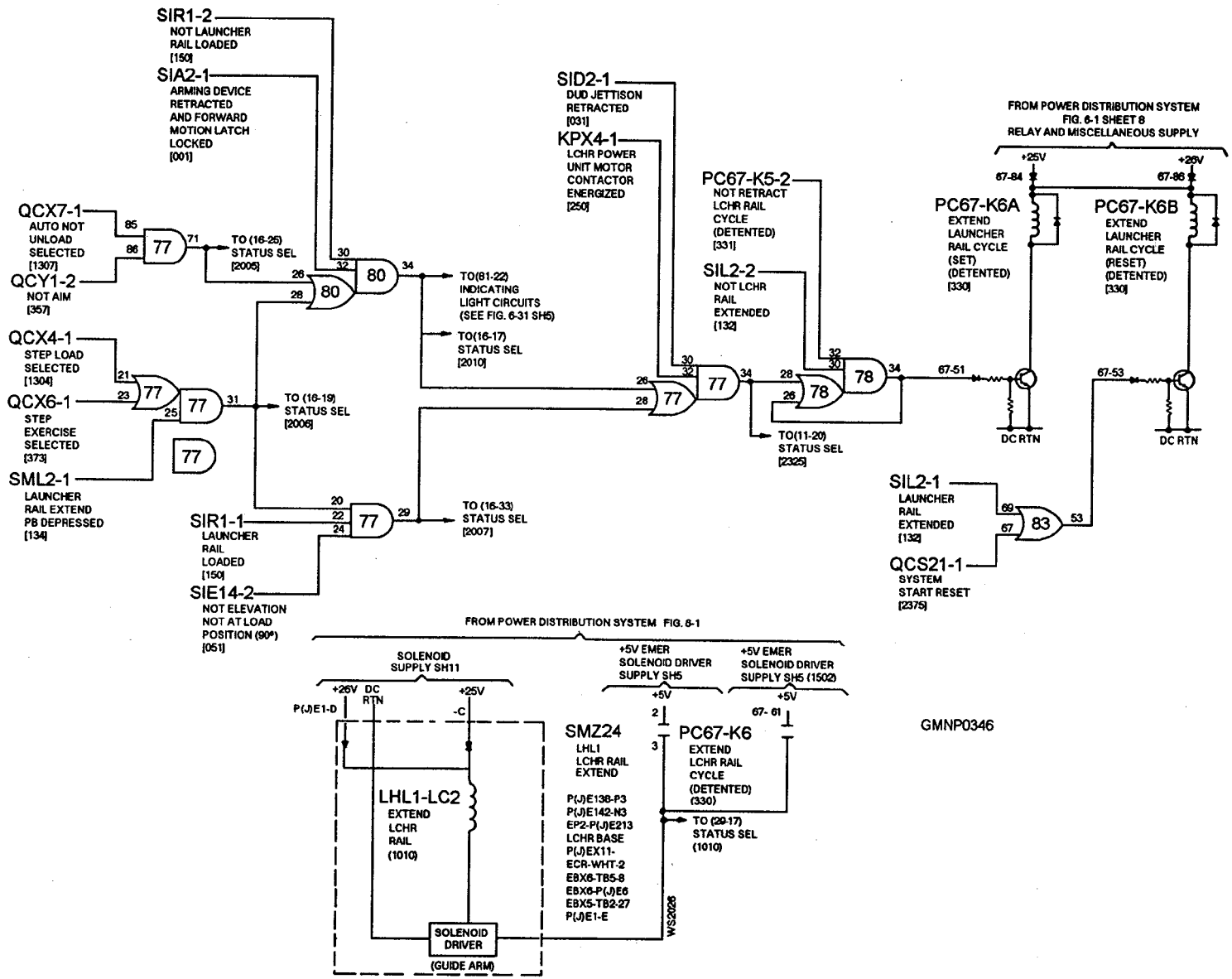

Figure 5-79.—Extend launcher rail schematic; Mk 13 Mod 4 GMLS retractable rail.

activates. The inverter-buffer outputs change and SIL2-2 (item #8) goes low to de-energize PC67-K6A. The SIL2-1 input (item #9) goes high to energize PC67-K6B (reset). This action de-energizes LHL1-LC2 that returns to neutral.

Step-Load and Step-Exercise Circuits

The following logic inputs are involved with the two-step modes of control used to re-extend the launcher rail:

1. QCX4-1—Step load selected
2. QCX6-1—Step exercise selected
3. SIR1-1—Launcher rail loaded
4. SIE14-2—Not elevation not at load position (90 degrees)
5. SIR1-2—Not launcher rail loaded
6. SIA2-1—Arming device retracted and forward-motion latch locked
7. SML2-1—Launcher rail extend push button depressed

The remainder of the circuit is the same as the auto-not-unload signal path.

Solid-State Control Circuit—Summary

The solid-state circuits we studied in figures 5-78 and 5-79 were relatively simple in nature. But, again, they are not "hard" if you do the following:

1. Understand the sequence of equipment operation.
2. Understand how solid-state devices function (and use the truth tables).
3. Practice to develop your skills.

SHIP'S POWER AND DISTRIBUTION

LEARNING OBJECTIVE: Recall general information concerning ships power distribution and safety precautions for working on and around electrical or electronic equipment.

As with compressed air, the electric power you need to run your equipment is generated and controlled by the ships engineers. Ships power is referred to as either 60 or 400 cycle (or Hz). All electrical power of the ship begins as the 440 volt, 60-cycle, three-phase output of the ships generators. This output, as shown in figure 5-80, is directed through the main switchboards of the ship to the various sections of the ship. Gun mount power drive motors normally operate off this power. Transformers are used to regulate some of the output to 115-volt, 60 Hz ac for lighting and other common uses. Other circuits convert some of the output to 400 Hz. Gun mounts use 400 Hz ships power to operate the synchros in positioning equipment, fuze setters, and sights.

Gun mounts normally have more than one source of electrical power. Both the primary and secondary sources are made available to the equipment through a large switch called an automatic bus transfer (ABT). The ABT powers the equipment from the primary source as long as it (power) is available. Should the primary source be interrupted for any reason, the ABT switches to the secondary source. Some gun maintenance will require the power supply to be secured from this switch box.

It is beyond the scope of this text to explain the details of electric power generation and distribution. Our intent is to give you the fundamental knowledge of its existence and impact on your equipment. For further information about power generation and distribution, refer to the Navy Electricity and Electronics Training Series (NEETS), Module 5, *Introduction to Generators and Motors,* NAVEDTRA 172-05-00-79, and ships drawings.

SAFETY

Some common safety features of electrical or electronic equipment are interlock switches, bleeder resistors, current-limiting resistors, insulating controls, and power line safety devices, such as fuses. Keep in mind that these features cannot always be relied upon to function. Do not develop a false sense of security just because an equipment has safety features. The following list of safety precautions will help prevent electric shock or bums when working on or near electrical or electronic equipment.

1. Do not block high-voltage protective cutouts on doors or covers to keep the circuit energized with the cover off. It is intended that work be performed on such electrical equipment while the circuit is de-energized.

2. Always ground the provided ground lead located at the plug of portable tools, such as electric

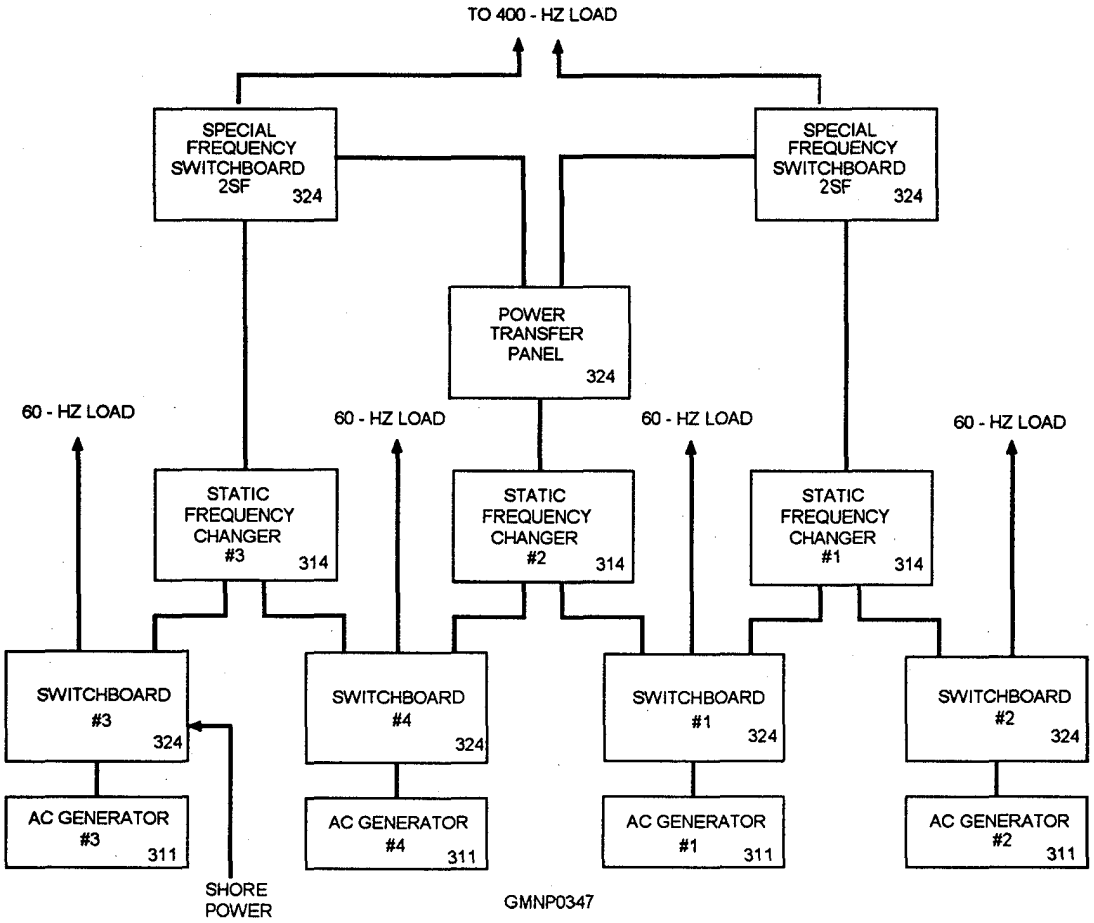

Figure 5-80.—Shipboard power distribution on a FFG-7 class ship.

drills, to protect yourself from shock in case a ground occurs within the tool.

3. Always be sure all condensers (capacitors) are fully discharged before commencing work on a de-energized high-voltage circuit. Use an insulated shorting bar for this purpose.

4. Tag the switch OPEN (open the switch and place a tag on it stating "This circuit was ordered open for repairs and will not be closed except by direct order of .") at the switchboard supplying power to the circuit you will be working on. When possible, remove the fuses protecting the circuit and place them in your toolbox for safekeeping until the job is complete.

5. Always remove fuses with fuse pullers, and never remove fuses until after opening the switch connecting the circuit to the source of supply. Never replace a fuse with one larger than the circuit is designed to handle.

6. Observe utmost caution when inspecting behind an open-back switchboard in an energized state.

7. Never use an incandescent test lamp unless its voltage rating is greater than the highest voltage that may be tested.

8. Always test a supposedly de-energized circuit with a voltage tester before commencing work on the circuit.

9. Never work on an electric circuit or network without first thoroughly acquainting yourself with its arrangement and with its points of power feed.

Electric shock may cause instant death or may cause unconsciousness, cessation of breathing, and burns. If a 60 Hz alternating current is passed through a person from hand to hand or head to foot, the effects when current is gradually increased from zero are as follows:

1. At about 1 milliampere (0.001 ampere) the shock can be felt.

2. At about 10 milliamperes (0.010 ampere) the shock is severe enough to paralyze muscles so that a person is unable to release the conductor.

3. At about 100 milliamperes (0.100 ampere) the shock is fatal if it lasts for 1 second or more.

It is important to remember that current is the shock factor, rather than the amount of voltage.

You should clearly understand that the resistance of the human body is not great enough to prevent fatal shock from a voltage even as low as 115 volts. In many cases, voltages less than 115 volts are fatal. When the skin is dry, it has a high resistance. The resistance may be high enough to protect a person from fatal shock even if one hand touches a high voltage while another part of the body touches the chassis or another ground.

Contact resistance decreases when the skin is moist and body resistance may drop to as low as 300 ohms. With this low resistance, a very low voltage could supply enough current to cause death.

SUMMARY

In this chapter we have looked at some of the components that make up electronic gun control circuits. We have also examined the predominate types of control circuits used to control gun system operation-transistorized circuits and logic circuits. We described the basics of circuit operation and the procedures for troubleshooting when circuits fail. We described some of the fundamentals of synchros and some general circuit failure principles. The Mk 75, Mk 45, and the Mk 13 control systems were only briefly described. Finally, we addressed some common safety precautions for working with electricity. Remember, you should refer to the publications cited within the chapter for additional specific information on individual subject areas.

CHAPTER 6

GUN MOUNTS

The guns aboard modern naval vessels, though complex in detail, are made up of basic components that vary little from one gun to the next. In this chapter we describe these common components and how they function. The remainder of the chapter is dedicated to describing the operation of the gun systems in the fleet today, including misfire procedures.

GUN COMPONENTS

LEARNING OBJECTIVES: Describe common gun system components and discuss the purpose of each component.

Every gun system includes equipment used for gun positioning, loading, and firing. Although loading equipment varies in design from gun to gun, its purpose remains the same-to load a complete round in the gun chamber for firing. The greatest similarities between the guns are the positioning and firing components. We will describe these components first, followed by a discussion of the various gun systems in use today. As we discuss each gun system, we will describe the major components and how they work together to load and shoot a complete round of ammunition.

Before we begin, let's examine three terms that are very basic to this *subject—ordnance, gun,* and *gun mount.* As terminology is basic to a thorough understanding of gunnery, other terms have been highlighted throughout this discussion to attract your attention.

ORDNANCE—Ordnance is the term covering all weapons, weapons system components, and support equipment (guns, ammunition, missiles, launchers, bombs, rockets, mines, torpedoes, fire control, and so forth).

GUN—A gun is a tube, closed at one end, from which a projectile is ejected at high speed by the gases produced from rapidly burning propellants.

GUN MOUNT—A gun mount consists of all the machinery used to position, load, and fire a gun.

POSITIONING EQUIPMENT

Positioning equipment includes all the machinery used to support and move the gun tube to the desired train (horizontal) and elevation (vertical) angle. This includes the stand, the base ring, the trunnion, the gun carriage, and the slide, as shown in figure 6-1. It also includes the gun train and elevation power drives.

Stand-The stand is a steel ring bolted to the deck that serves as a foundation and rotating surface for movement in train. The stand contains both the train bearings and the training circle. The training circle is a stationary internal gear that the train drive pinion "walks around' to move the gun in train.

Base Ring-The base ring is also called the lower carriage. It is the rotating platform, supported by the stand, that supports the upper carriage.

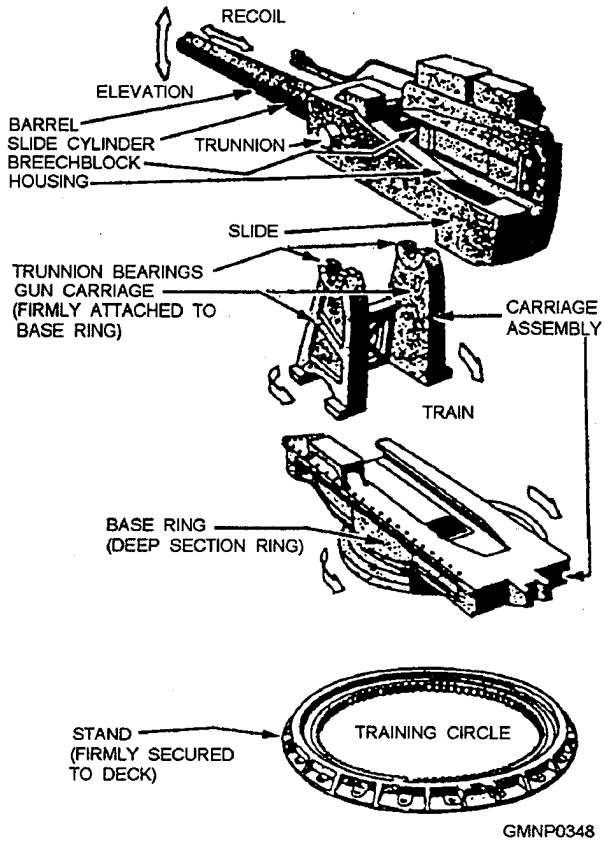

Figure 6-1.—Gun-positioning equipment.

Gun Carriage—The gun carriage is also called the upper carriage. It is a massive pair of brackets that holds the trunnion bearings. The trunnion bearings support the trunnions, which are part of the slide, together forming the elevation pivot point.

Slide—The slide is a rectangular weldment that supports all the elevating parts of the gun.

THE 5"/54 MK 45 MOD 0 GUN MOUNT POWER DRIVE

The power drives for the 5"/54 Mk 45 Mod 0 gun mount consists of the train and elevation power drives. The train power drive responds to one set of order signals to rotate the carriage, while the elevation power drive responds to another set of order signals. Activation of the power drives occurs as follows:

1. The elevation and train motors are started. The elevation motor is started first because it furnishes servo and supercharge fluid to both the elevation and train power drives.

2. The power-off brakes release when a mode of operation is selected.

3. After being assigned to a fire control system by weapons control, the mount trains and elevates in response to a remote signal.

General Description

The power drives for the 5"/54 Mk 45 gun mount are physically smaller than those used on the 5Æ/54 Mk 42 gun mounts because the Mk 45 gun mount is lighter in weight. Other than size, the main difference involves the use of only one gear pump and one auxiliary relief

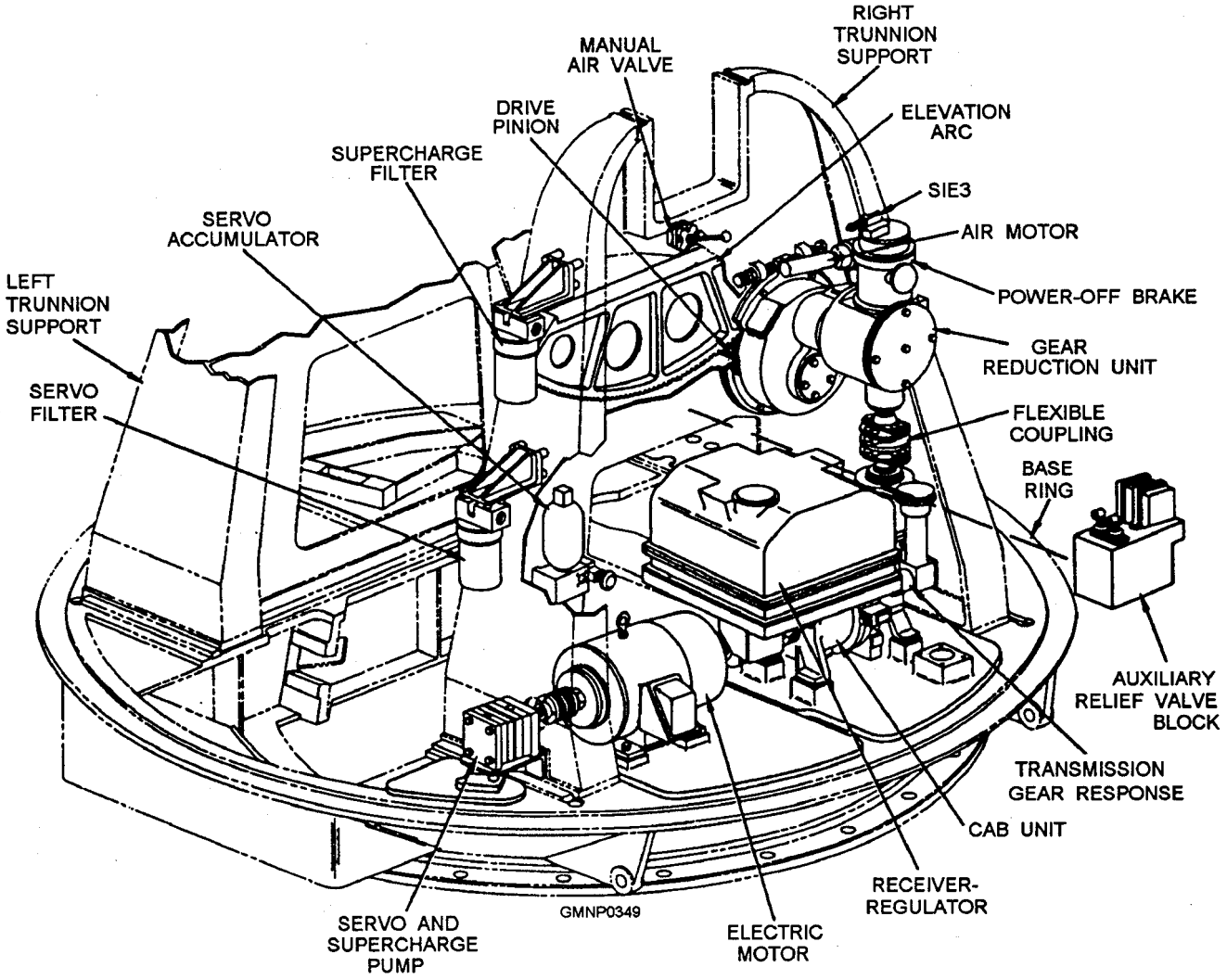

Figure 6-2.-Elevation system power drive.

valve block to provide the fluid pressure for both the train and elevation power drive servo and supercharge requirements. Because the train and elevation power drives on this mount operate in a similar manner, only the elevation power drive is presented. Figure 6-2 shows the arrangement of the principal elevation power drive components.

Electric Motor (5"/54)

A 15-horsepower constant-speed electric motor drives the A-end of the cab unit. The train and elevation power drives are independent with their own motors. The motors are supplied with 440-volt, 60-Hz power from the EP1 panel.

Hydraulic Transmission (CAB UNIT)

This CAB unit (fig. 6-3) consists mainly of an A-end, a valve plate, and a B-end. Here, a brief description of how they operate is presented.

A-END.— The A-end is coupled to, and driven by, the elevation electric motor. Controlled hydraulic fluid from the receiver-regulator, acting on stroking pistons in the A-end, controls the volume and direction of fluid that the A-end pumps to the B-end. The A-end output, therefore, controls the speed and direction of rotation of the B-end output shaft.

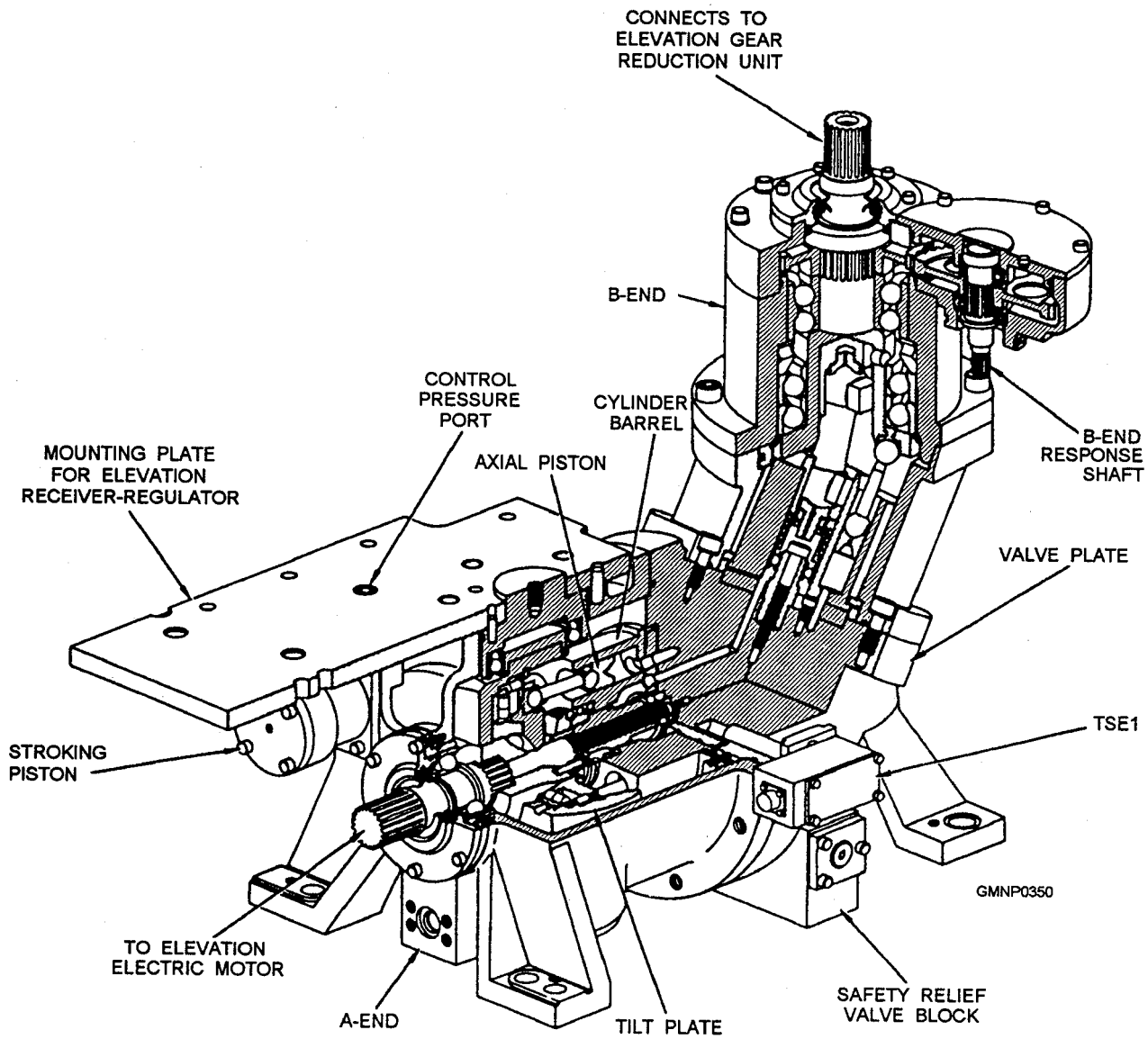

Figure 6-3.—Elevation CAB unit (cutaway view),

The cylinder barrel in the A-end (fig. 6-4) contains nine pistons located axially around the drive shaft. The pistons reciprocate (move back and forth) within the cylinder bores, drawing fluid in during 180-degree rotation of the A-end and discharging fluid during the other 180-degree rotation. The volume of fluid pumped depends on the length of piston travel in the cylinder bore, which is determined by the angle of the variable tilt plate. Two stroking pistons, one on each side of the tilt plate, control the tilt plate angle.

VALVE PLATE.— The stationary valve plate, located between the A-end and B-end, has two crescent-shaped ports. The valve plate keeps the fluid being drawn into the A-end separate from the fluid being discharged under pressure to the B-end.

B-END.— The B-end, with its fixed-position tilt plate, operates in a reverse manner from the A-end, converting fluid flow into rotary motion. When fluid output from the A-end piston is applied to the B-end piston, the resultant thrust of the ball-end connecting rod against the inclined socket ring causes the socket ring to rotate. A universal joint connects the socket ring to the B-end output shaft so that both the output shaft and the cylinder barrel rotate with the socket ring (fig. 6-4). The cylinder barrel rotates against the two crescent-shaped ports in the valve plate. One port supplies A-end fluid to the axial pistons for a thrust stroke and the other port receives displaced fluid from the pistons on the retract stroke. During continuous rotation of the B-end, hydraulic fluid from the A-end is applied to the piston for the thrust stroke. As the cylinder bore moves past the land separating the two ports, fluid empties into the discharge port as the piston moves in the retract stroke. The discharge port for the B-end, which is replenished with supercharge fluid, connects to the intake port for the A-end. This action keeps hydraulic fluid in the CAB unit circulating within a closed loop with only supercharge fluid replenishing fluid lost through slippage.

Safety Relief Valve

The elevation safety relief valve (fig. 6-5, view A) is a compound relief valve, consisting of a pilot valve (UVE67), main relief valve (UVE68), and four check valves (UVE69, UVE70, UVE71, and UVE72). There are two springs in the valve block that hold UVE67 and UVE68 seated until an excessive pressure condition occurs. There are two control orifices in UVE68 that prevent pressure buildup in the CAB unit during normal operation.

The safety relief valve has two functions:

1. It limits hydraulic pressure buildup in the high-pressure output line of the A-end. (It operates in conjunction with the pressure cutout switch SIE2A.)

2. It prevents pump cavitation by porting supercharge fluid to the low-pressure return line of the A-end (compensating for fluid lost through slippage and leakage).

The direction of the A-end stroke determines which chamber of the valve plate ports A-end output (high

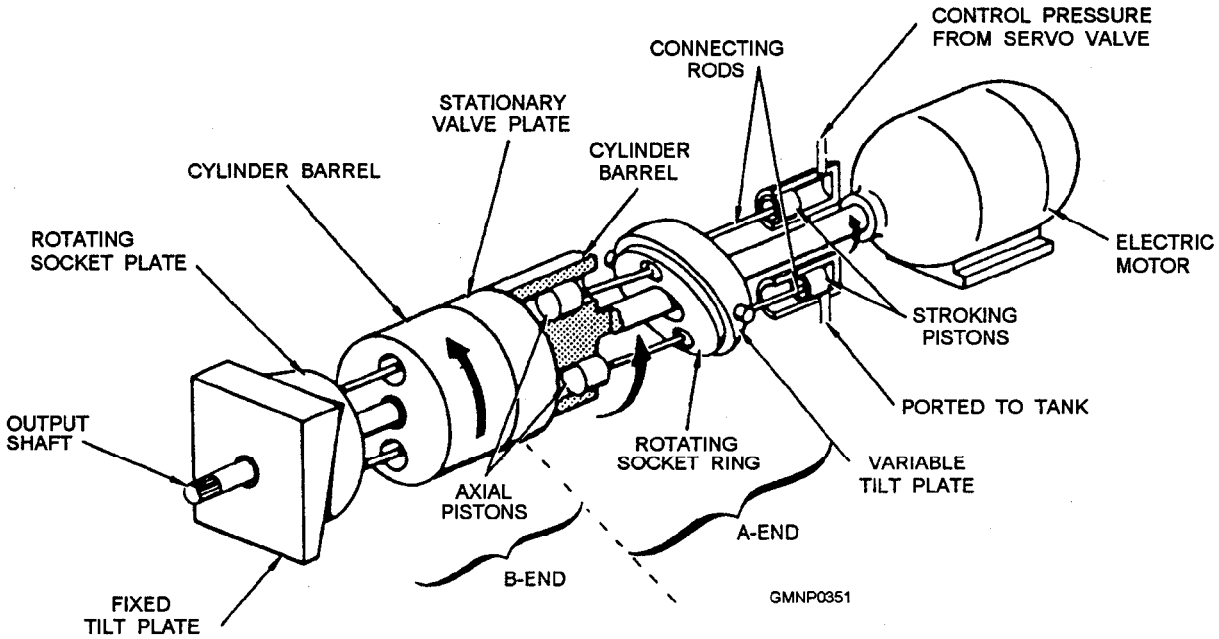

Figure 6-4.—CAB unit (mechanical schematic).

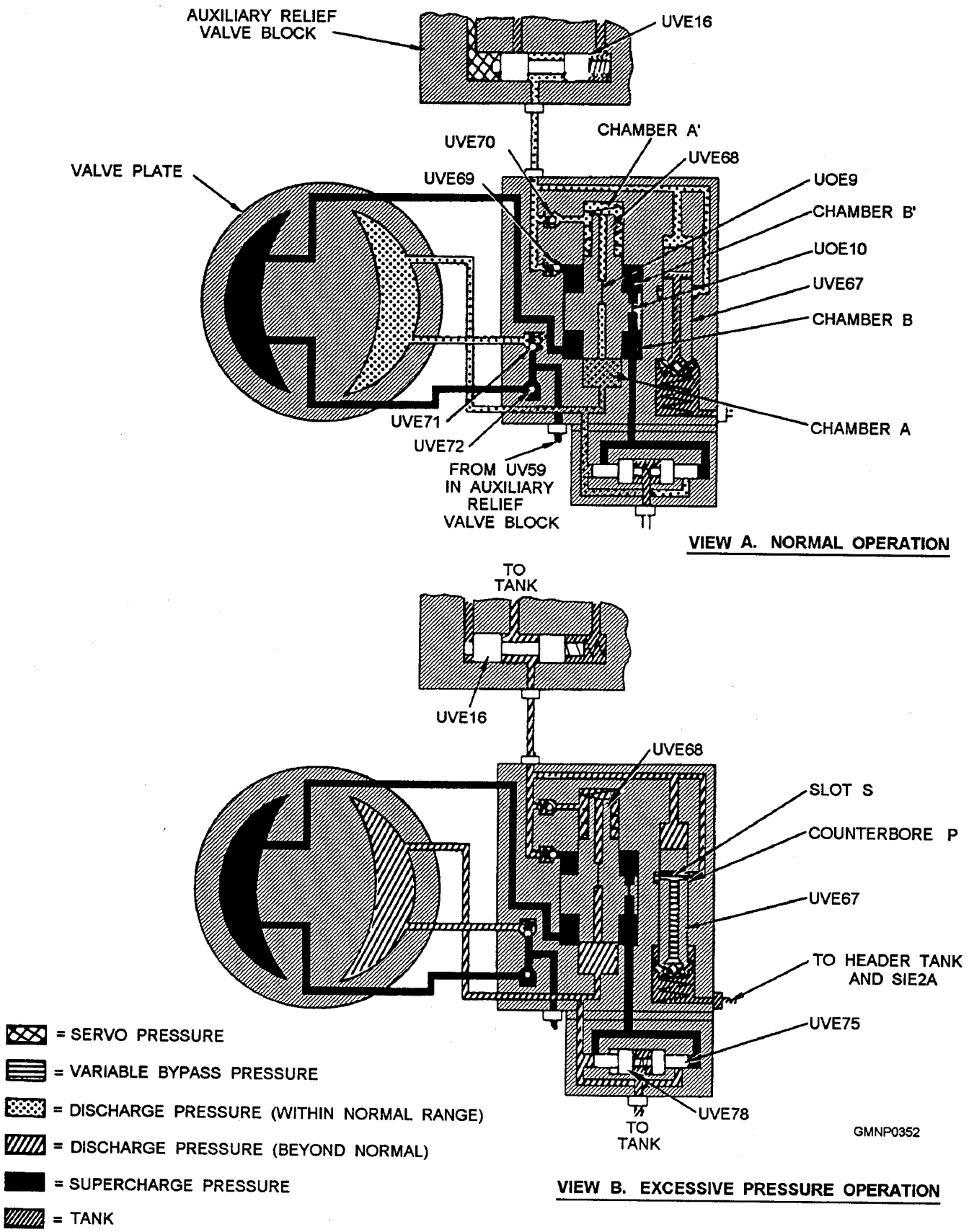

Figure 6-5.—Safety relief valve operation.

pressure) fluid and which ports return (low pressure) fluid. The operation of the main relief valve, however, is independent of the direction of stroke. Figure 6-5, view A, shows the valve plate feeding A-end output to chamber A and return fluid to chamber B of the main relief valve. The valve functions in the same manner when the fluid in chambers A and B are reversed.

Check valves UVE71 and UVE72 control the flow of supercharge fluid to the CAB unit valve plate. Check valves UVE69 and UVE70 allow the flow of A-end output to UVE67 while preventing its flow into the return passages. During normal operation, A-end discharge fluid pressure holds one check valve open and the other closed. With A-end discharge fluid in chamber A´, UVE70 opens a passage leading to the pilot valve UVE67 in the safety relief valve block, to the pilot valve UVE16 in the auxiliary relief valve block, and to the reverse side of UVE69. When the discharge fluid pressure is in chamber B´, UVE69 opens chamber B´ to UVE67, to UVE16, and to the reverse side of UVE70.

The plunger of the main relief valve (UVE68) has four faces of identical effective areas. These areas are in chambers A, A´, B, and B´. It also has identical orifices (UOE9 and UOE10) that restrict the flow of fluid from chambers A to A´ and from B to B´. When no fluid is flowing from the lower chambers to the upper chambers, the hydraulic pressure in all four chambers is equal. When discharge fluid pressure in A and A´ are equalized and supercharge fluid pressure in B and B´ are equalized, the only effective force is the initially compressed mainspring that holds the plunger seated.

When either UVE67 or UVE16 opens to the tank, it also opens chambers A´ and B´ to the tank. Any fluid flow through UVE67 or UVE16 must come from the valve plate through the two orifices and UVE70 and UVE69. The fluid pressure in the upper chambers drops below that in the lower chambers because of the orifices. When this occurs, the fluid pressure overcomes the force of the mainspring and the UVE68 plunger unseats. Now, with UVE68 unseated, A-end discharge fluid in chamber A bypasses to chamber B and into the return (low pressure) passage of the valve plate.

During normal operation the conditions affecting the safety relief valve are as follows:

1. The A-end is on stroke.

2. Valve UVE16 in the auxiliary relief valve block is blocking discharge fluid.

3. The power-off brake is released.

Under these conditions, UVE68 is in hydraulic balance and its plunger is seated. Any variation in the load on the CAB unit varies the discharge pressure in the valve plate. This variation acts on the top of UVE67.

During normal operations, however, the fluid pressures do not exceed the preload of the UVE67 spring. Accordingly, UVE67 never bypasses fluid to the tank. With no line open to the tank, the main relief valve cannot unseat.

During excessive pressure operation (fig. 6-5, view B), the conditions affecting the safety relief valve are as follows:

1. The A-end is on stroke.

2. Either the gun barrel elevates or depresses into a physical obstruction or the brake sets as the result of a power failure. (The physical obstruction could be something on deck or it could be the elevation or depression buffer.)

The pressure cutout switch (SIE2A) in the tank line of UVE67 shuts down the electric motor to protect the valve plate against high temperatures developed during prolonged bypassing (more that 0.9 second). The preload of the UVE67 spring determines the hydraulic pressure required at the top of UVE67 to unseat its plunger and, in turn, to bypass discharge fluid to the tank through the slot in the plunger. Thus the two valves that determine when the main relief valve unseats are UVE67 and UVE16.

When the gun elevates or depresses into a physical obstruction, pressure in the discharge passage of the valve plate rises beyond the bypass limit of the safety relief valve. This abnormally high pressure offsets the preload of the UVE67 spring and shifts the UVE67 plunger downward to bring slot S and counterbore P into line-to-line orientation. Further increase in pressure on the top of UVE67 shifts the plunger farther down to permit a proportional flow of discharge fluid to the tank through counterbore P and slot S.

When the resulting flow causes the pressure in the lower chambers of UVE68 to offset the force of the mainspring, the UVE68 plunger unseats. Thus the safety relief valve keeps the discharge pressure in the CAB unit within the bypass limit.

Servo and Supercharge Supply System

The servo and supercharge supply system consists of a servo and supercharge pump, an auxiliary relief valve block, a servo accumulator, a charging valve, and

a pair of fluid filters. This system shares the main tank and the header tank with the upper accumulator system.

SERVO AND SUPERCHARGE PUMP.— The servo and supercharge pump is mounted on the aft end of the right trunnion support and is driven by the elevation electric motor. This dual output gear pump supplies servo fluid to control both CAB units (train and elevation) and also the supercharge fluid to replenish the CAB unit slippage.

AUXILIARY RELIEF VALVE BLOCK.— The auxiliary relief valve block (fig. 6-6) is mounted in the middle of the right trunnion support. Its purpose is to limit supercharge fluid pressure to 150 psi, limit servo fluid pressure to 450 psi, control the operation of the power-off brake, indicate by means of switches the availability of supercharge and servo fluid pressures, and provide a flow of fluid to cool the elevation and train the CAB units.

When the elevation electric motor is started, filtered supercharge fluid enters the valve block through check valve UV77 and is ported to the center of supercharge pressure relief valve UV59. From UV59, it ports to the train and elevation safety relief valves to replenish the transmission lines. As supercharge fluid builds up to its normal operating pressure of 150 psi, it forces UV59 downward against its spring and, through orifice UO4, forces supercharge pressure switch piston UC5 upward against its spring. When supercharge fluid reaches 150 psi, UC5 activates switch SIY3 indicating that supercharge fluid pressure is normal and, at the same time, UV59 moves down and opens a port that bypasses part of the supercharge fluid to the elevation CAB unit.

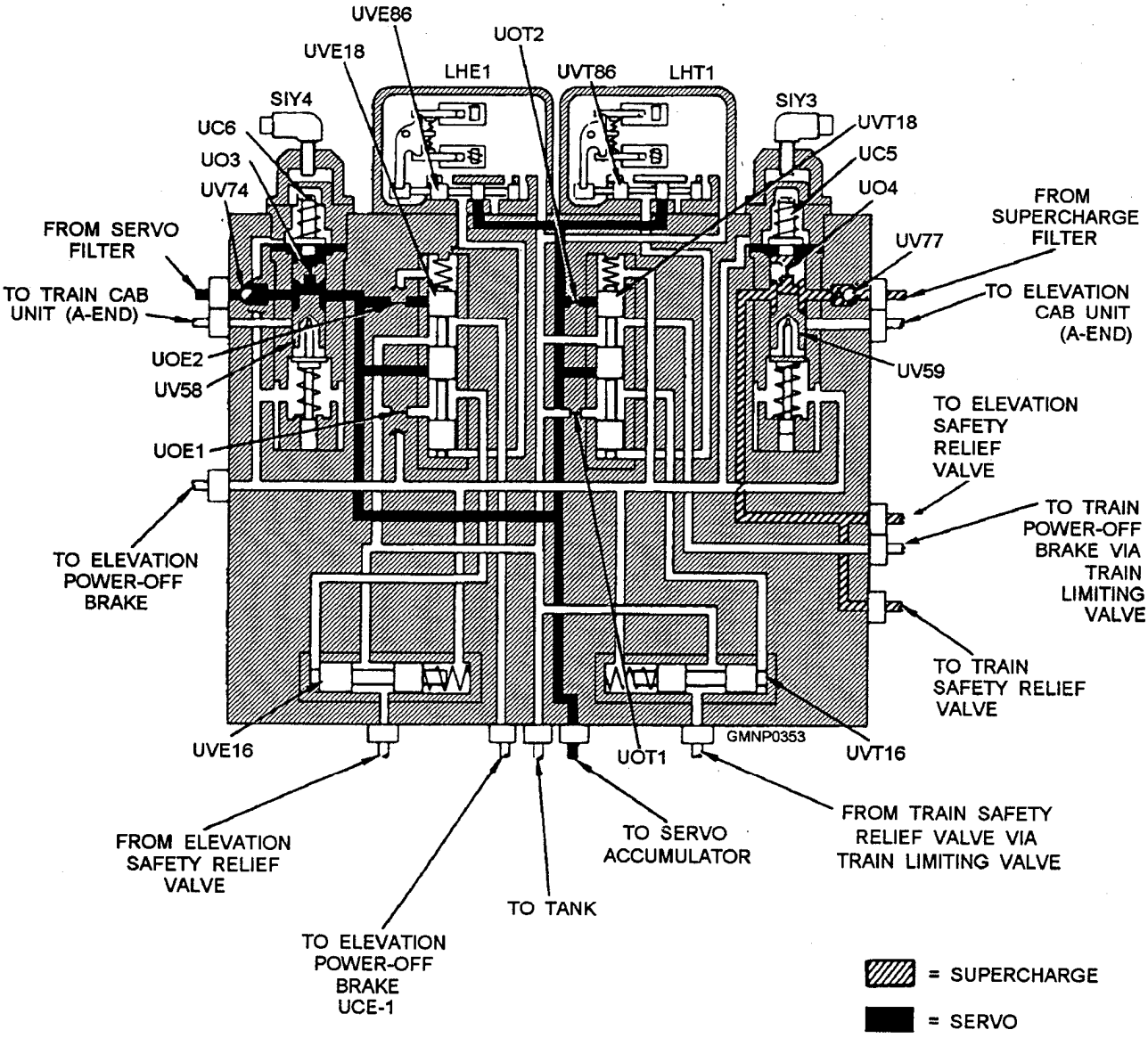

Figure 6-6.—Auxiliary relief valve block (elevation motor started).

Thus UV59 maintains supercharge fluid pressure at 150 psi and bypasses the surplus fluid to circulate through, and cool, the elevation CAB unit.

Servo pressure relief valve UV58 functions in the same manner as UV59 to limit servo fluid pressure to 450 psi. Orifice UO3, piston UC6, and switch SIY4 function in the same manner as do orifice UO4, pressure switch piston UC5, and switch SIY3.

Servo fluid is ported to both train and elevation power-off brake release plungers UVT18 and UVE18, to the solenoid-operated pilot valves UVE86 and UVT86, and to the servo accumulator. Surplus servo pump output is also ported by UV58 to circulate through and cool the train CAB unit when servo fluid pressure reaches 450 psi.

Solenoids LHT1 and LHE1, located on top of the auxiliary relief valve block, set or release the power-off brakes and activate the safety relief valves. When LHE1 energizes (fig. 6-7), UVE86 shifts to the left, porting servo fluid to the bottom of UVE18. As UVE18 moves upward against spring tension, its lower land closes a port to the tank and its upper land opens a servo fluid line to power-off brake release piston UCE1. At the same time, the center land of UVE18 opens another servo fluid line to the left end of pilot valve UVE16, shilling it to the right and blocking the A-end output from the elevation safety relief valve. With the A-end output blocked by UVE16, the safety relief valve seats, allowing the A-end output to build up pressure to the B-end.

When the elevation power drive is stopped, LHE1 de-energizes and shifts UVE86 to its NEUTRAL position, porting the fluid on the bottom of UVE18 to the tank. This closes the servo fluid line and ports UCE1 to the tank, setting the power-off brake. Pilot valve UVE16 then shifts to the left because the pressure on its left end is ported to the tank and is spring loaded. This allows the safety relief valve to open and port A-end output to the tank.

SERVO ACCUMULATOR.— The servo accumulator (fig. 6-8) maintains a reserve of servo pressure to meet peak demands for both the train and elevation power drives. Servo pressure enters the accumulator through a spring-loaded check valve,

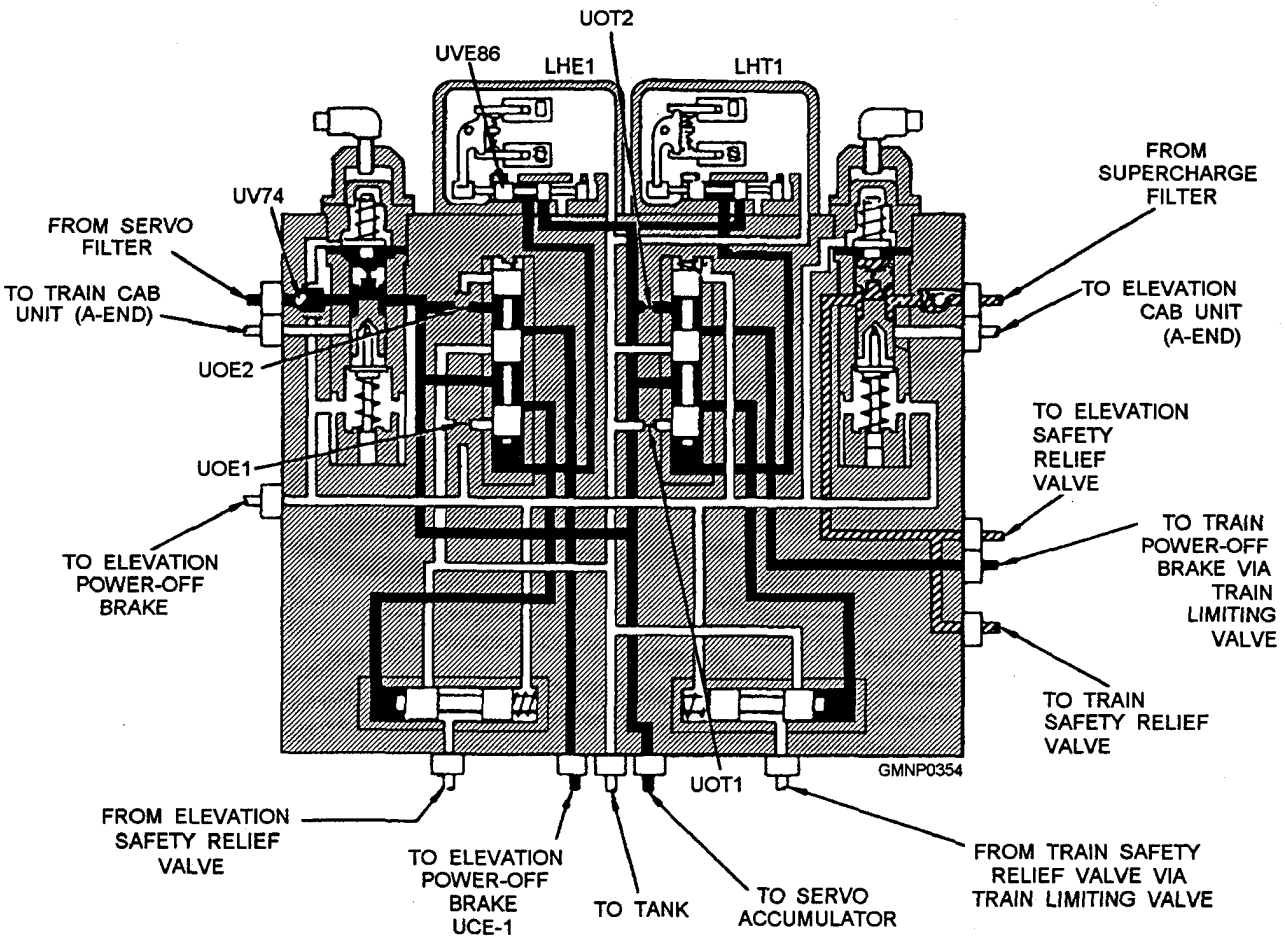

Figure 6-7.—Auxiliary relief valve block (power-off brake released).

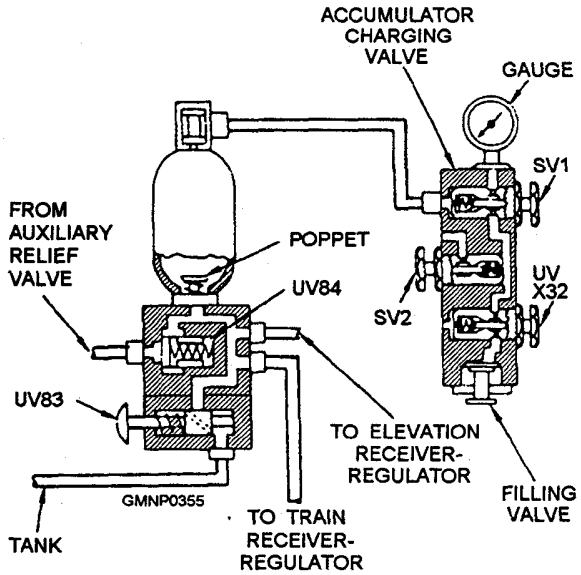

Figure 6-8.—Servo accumulator (schematic diagram),

UV84. Valve UV84 prevents accumulator pressure from feeding back through the pump during shutdown. Fluid then ports to the accumulator flask and to the receiver-regulator of each power drive. The fluid reserve in the flask is held under pressure by the nitrogen charged bladder,

THE MK 75 76MM POSITIONING EQUIPMENT

The Mk 75 uses two 3-kW low-inertia dc motors and reduction gearing for train and a single 4.5-kW dc motor and reduction gearing for elevation. This system was discussed in detail in chapter 5.

FIRING EQUIPMENT (GENERAL)

LEARNING OBJECTIVE: Describe the firing equipment common to all naval gun mounts.

The firing equipment includes all the components necessary to allow the gun to fire safely, absorb the shock of recoil, and reposition for further firing. This includes the housing, the breechblock, the recoil system, the counterrecoil system, the firing circuits, and the firing cutouts.

Housing—The housing is a large steel casement in which the barrel and breechblock are fitted. The housing moves in recoil inside the slide.

Breechblock—The breechblock seals the breech end of the barrel. Breechblocks are of two different types—sliding wedge or interrupted thread. The slidlng wedge consists of a machined steel plug that slides in a grooved way in the housing to cover the breech opening. The grooves are slanted so that the breechblock moves forward as it covers the back of the casing, wedging it in place. The interrupted thread breech plug closes similar to the way a bayonet lug camera lens is installed. The lugs on the plug are cut to allow it to be inserted into the grooves cut in the threaded breech. Once inserted, the plug is turned 120" and locked in place. The Mk 45 and Mk 75 use the sliding wedge breechblock. The sliding wedge breechblock is shown in figure 6-9.

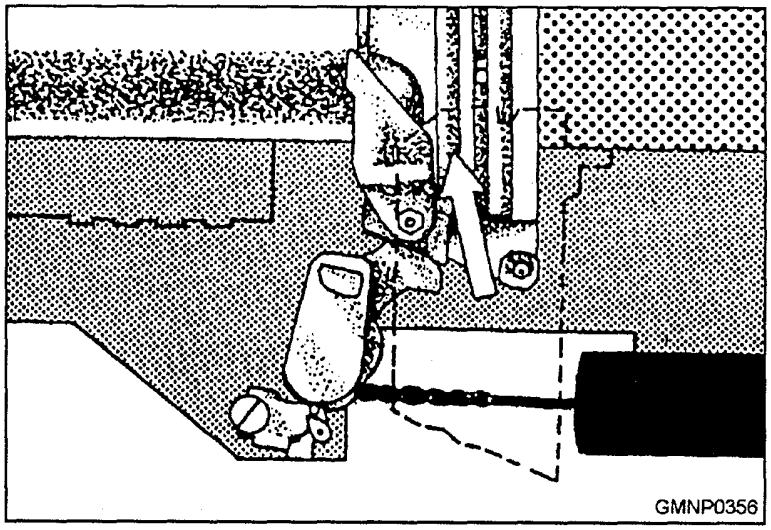

Figure 6-9.—The sliding wedge breechblock.

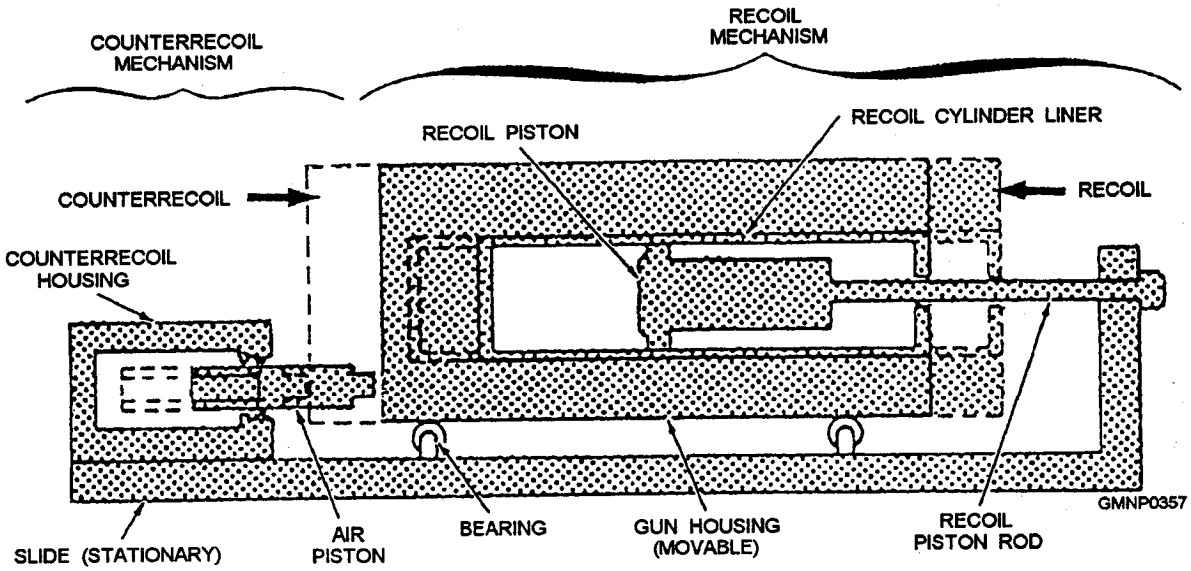

Figure 6-10.—Recoil and counterrecoil systems.

Recoil System—Normally, a recoil system (fig. 6-10) consists of two stationary pistons attached to the slide, set in a liquid-filled cylinder in the housing. As the housing moves rearward in recoil, the trapped liquid is forced around the piston head through metered orifices, slowing the movement of the housing.

Counterrecoil System—A counterrecoil system consists of a piston (or pistons) set in a pressurized cylinder. As the gun recoils, the piston protrudes further into the cylinder. After the force of recoil is spent, the nitrogen pressure, acting against the piston, pushes the housing back into battery (the full forward position). The piston may be attached to the slide or set in a chamber mounted to the inside of the slide. Figure 6-11 shows the configuration used on the 5"/54 Mk 45 gun system. Nitrogen pressure holds the free-floating pistons against the back of the housing, which forces them into the stationary chamber during recoil.

Since the nitrogen pressure in the counterrecoil system is the only thing holding the gun in battery, all guns are equipped with a safety link. The safety link physically attaches the housing to the slide to prevent it from moving if system pressure is lost. The safety link is disconnected before firing.

Firing Circuits-Basically, a firing circuit supplies firing voltage to the propelling charge primer. This sounds simple, but the application can be quite complicated. Certain conditions must exist before

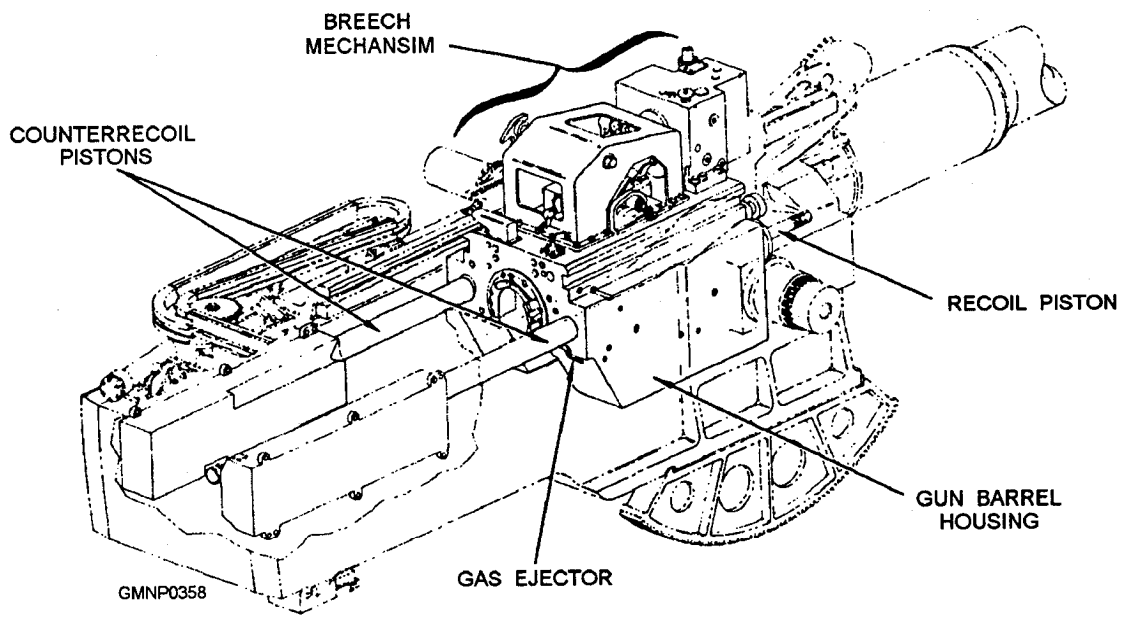

Figure 6-11.—5"/54 Mk 45 recoil and counterrecoil systems.

firing to ensure a safe evolution. Making sure the gun is pointed in a safe direction, all the loading equipment is in the FIRE position (out of the way of recoiling parts) and the breechblock is all the way closed are just a few of the obvious things that must be correct before firing. A typical electronic firing circuit includes interlock inputs that serve to monitor these and many other conditions, allowing firing voltage to pass only after all safety conditions have been satisfied.

Firing Cutouts—A firing cutout mechanism interrupts firing when the gun is pointed at or near permanent ship's structure. A firing cutout is a mechanical device that monitors the gun position. Figure 6-12 shows a firing cutout mechanism. Notice the inputs from the system. The gun train position input rotates the cam, while the elevation input positions the follower. While the cam follower is on a low area of the cam, the firing circuit is closed or enabled. As the gun trains and elevates and the follower rides upon a raised portion of the cam, the firing circuit is opened.

PREFIRE REQUIREMENTS (GENERAL)

LEARNING OBJECTIVE: Describe general prefire requirements for naval gun mounts.

Before firing, each of these systems must be inspected and tested. Gun power drives and the loading

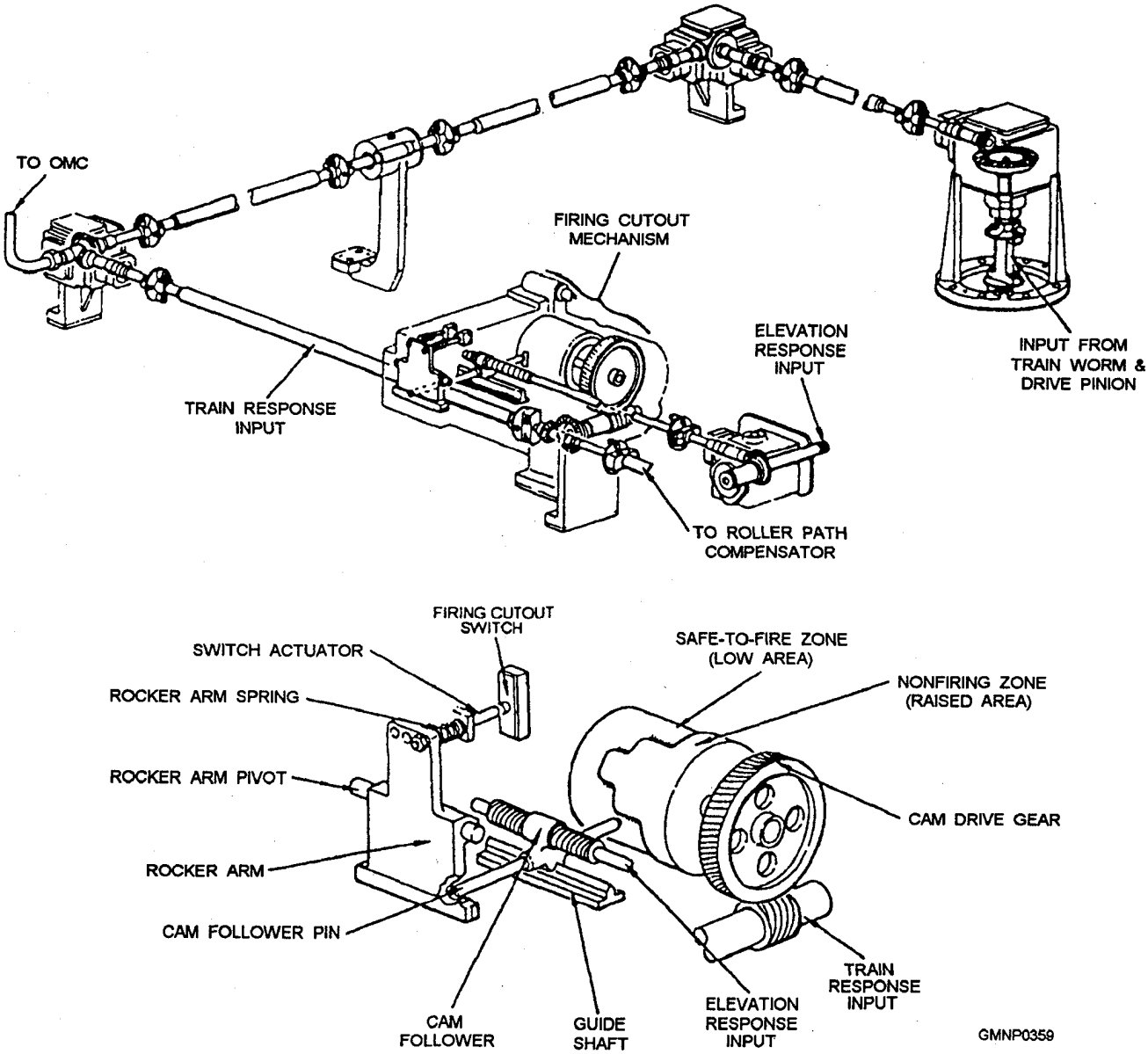

Figure 6-12.—Firing cutout mechanism, response gearing, and cam.

system have their hydraulic fluid levels checked, are inspected for gear adrift, and then are test-operated. Fluid levels in the recoil and counterrecoil systems are checked and firing circuits and firing cutouts are tested. The detailed procedure for performing prefire checks is provided on the appropriate system maintenance requirement card (MRC). Prefire and postfire barrel maintenance requirements are described in chapter 12.

The components we have just described are common to all guns. We will now discuss the individual gun systems in the fleet today, paying particular attention to the loading system in each one.

GUN SYSTEMS

LEARNING OBJECTIVE: Discuss the gun crew positions and their responsibilities. Describe the loading sequence of the Mk 45 and Mk 75 gun mounts.

As you read this section and study the illustrations, note the different configurations of machinery designed to accomplish the same task from one gun to the next.

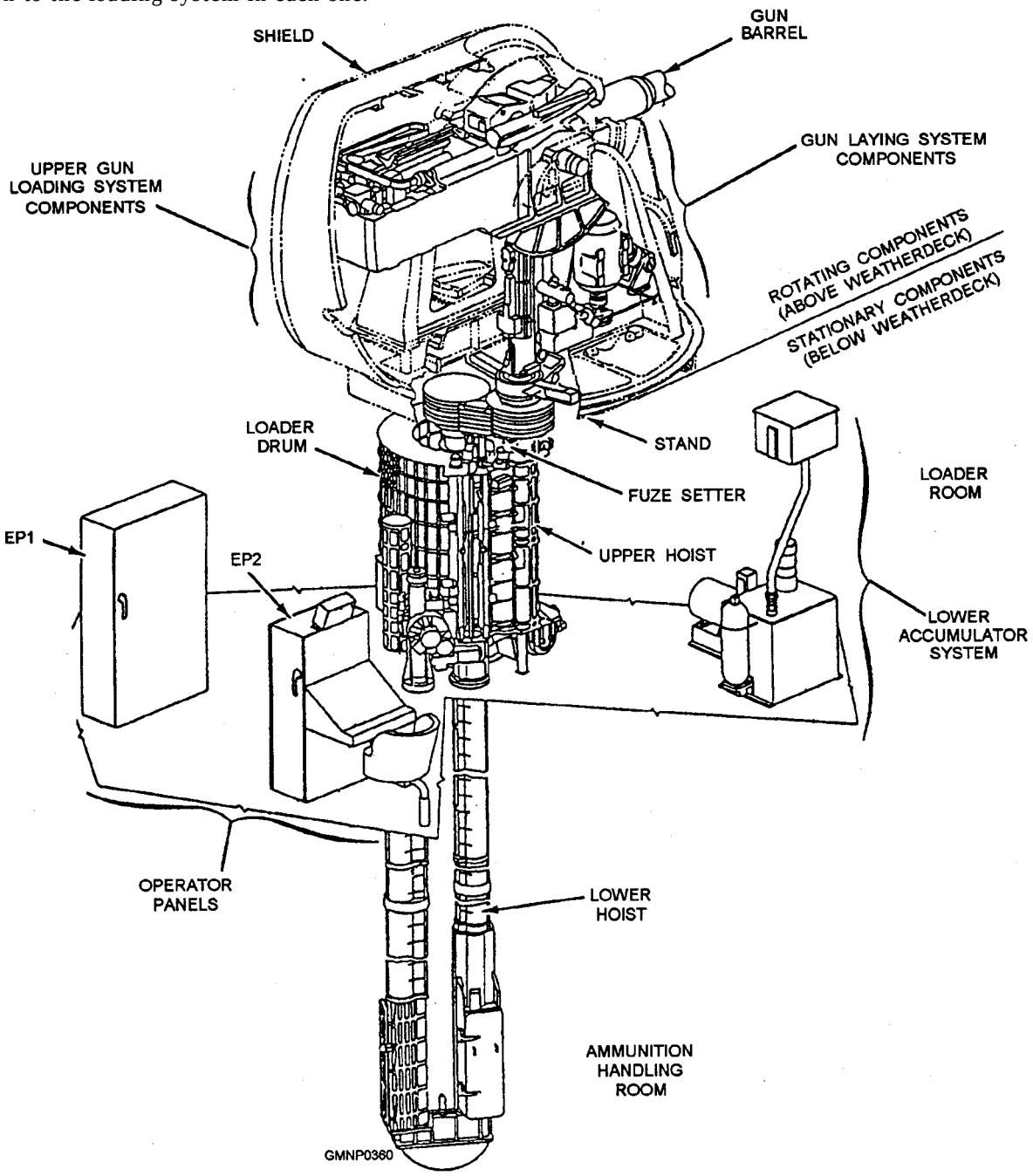

Figure 6-13.—The 5"/54 Mk 45 Mod 0; general arrangement.

When speaking of gun equipment, all directional nomenclature (left, right, front, back) is relative to the muzzle of the gun (the end of the barrel that the projectile exits when fired) that is to the front as you stand inside the gunhouse.

THE *5"/54* MK 45 GUN

The 5"/54 Mk 45 gun, developed in the early 1970s, is the newest of the 5-inch guns in the fleet today. It is found aboard the DD-963, the DDG-51, the LHA-1, and the CG-47 class ships with the Mk 86 GFCS. The Mk 45 gun is currently found in two versions-the Mod 0 and the Mod 1—with Mods 2 and 3 currently under development. The Mod 0 is currently being replaced with the Mod 1. The major differences between the two is that the Mod 1 is designed to fire guided projectiles and has electronic upgrades in its control circuits. These will not be covered in this text since the main components of the loading system are very similar.

The Mk 45 (fig. 6-13) is a fully automatic, dual-purpose, lightweight gun mount capable of firing the full range of 5"/54 projectiles, including RAP (rocket-assisted projectiles), at a rate of 16 to 20 rounds per minute. During normal operation, the loading system (fig. 6-14) is operated locally by the mount

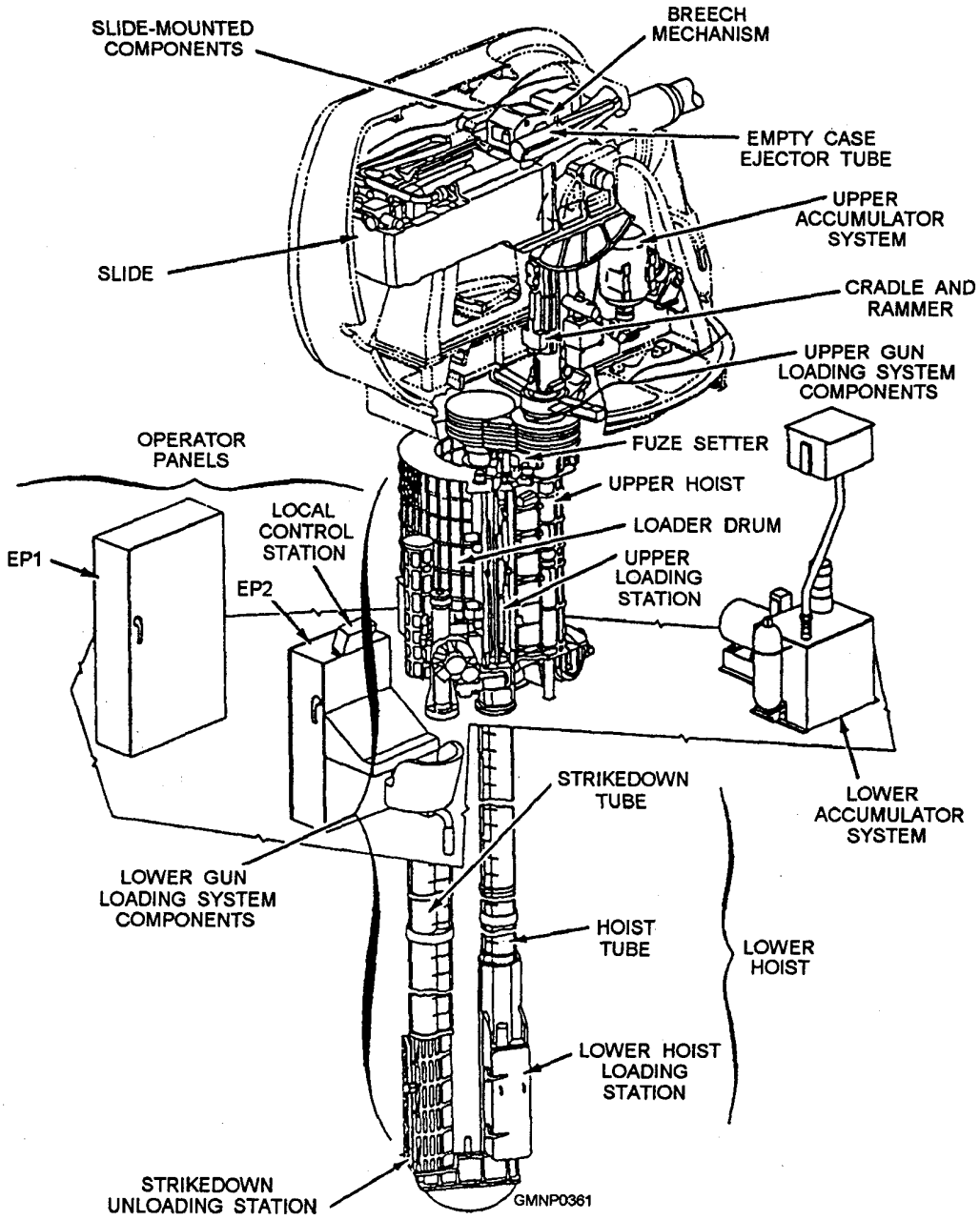

Figure 6-14.—The 5"/54 Mk 45 gun-loading system; major components.

captain while gun laying, fuze setting, and firing orders are generated by the FCS. The gun maybe positioned locally from the EP2 panel for maintenance purposes only.

Crew Positions and Responsibilities

The manned positions on the Mk 45 gun during normal operations are the EP2 panel operator, the mount captain in the loader room, and a magazine crew in the magazine. The gun mount itself (upper gun) is unmanned. The mount power distribution panel, EP1, is the mount captain's responsibility.

The loader drum holds a total of 20 complete rounds of ammunition. Before an operation, the magazine crew will load the drum, through the lower hoist, with 20 rounds of various types of ammunition. The loader drum can also be loaded in the loader drum room through the upper loading station.

Loading Sequence

Usually at the start of a load-and-fire operation, the **rotating drum** already has a compliment of ready service ammunition. If not, the magazine crew immediately

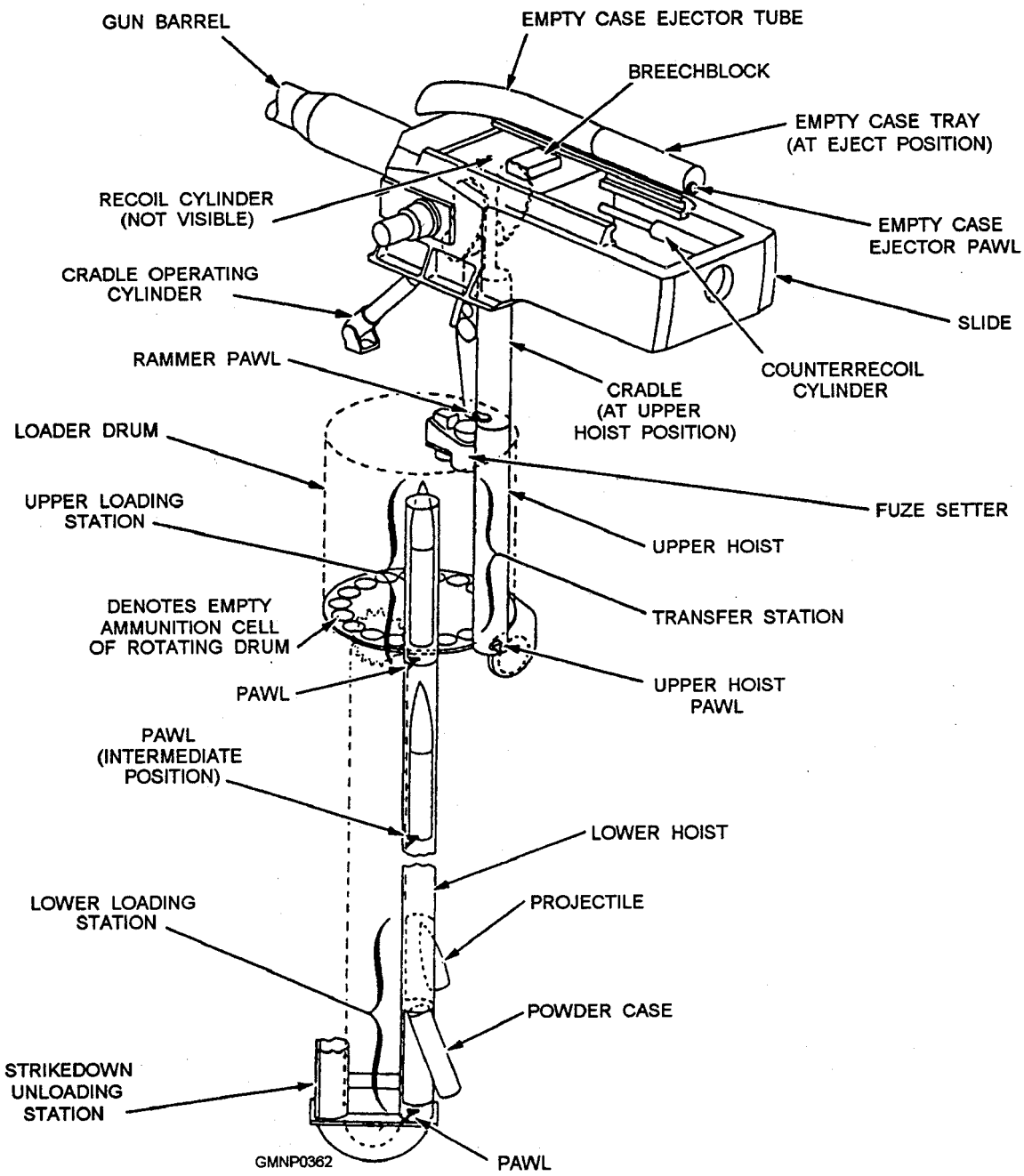

Figure 6-15.—Filling of the loader drum through the lower hoist.

begins hand-feeding powder cases and projectiles into the loading system at the lower hoist (fig. 6-15). The lower hoist then raises the rounds to the upper loading station, where the ejector transfers the rounds into the rotating drum.

With a load-and-fire order in effect, the rotating drum indexes until a loaded cell reaches the transfer station. At the transfer station, a positioning mechanism aligns the round to the fuze setter mounted overhead. If the projectile has an MT fuze, the fuze setter extends (fig. 6-16), sets the fuze, and retracts. An ejector then transfers the round into the upper hoist (fig. 6-17).

With the first round in the upper hoist and the hoist raising, the rotating drum indexes clockwise to bring the next loaded cell into place. The upper hoist raises the first round into the cradle (fig. 6-18), which is latched at the HOIST position. The cradle pawl holds the round while the hoist pawl lowers for the second round. When the hoist pawl is clear of the cradle, the

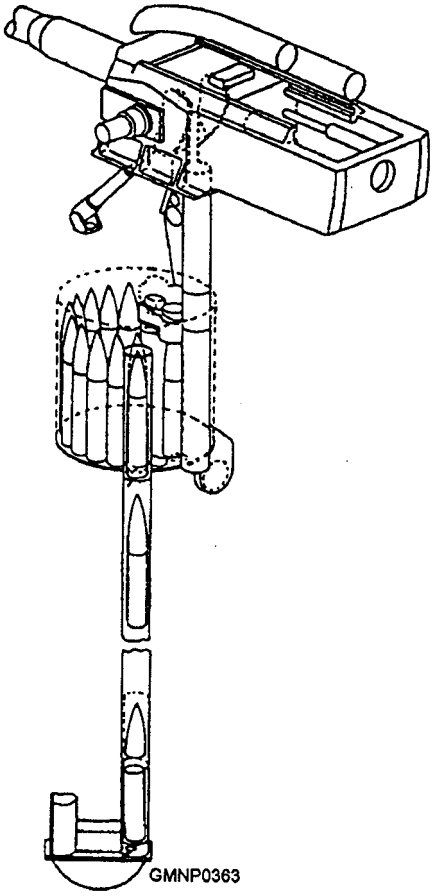

Figure 6-16.—A round at the transfer station with fuze setter in place setting fuze.

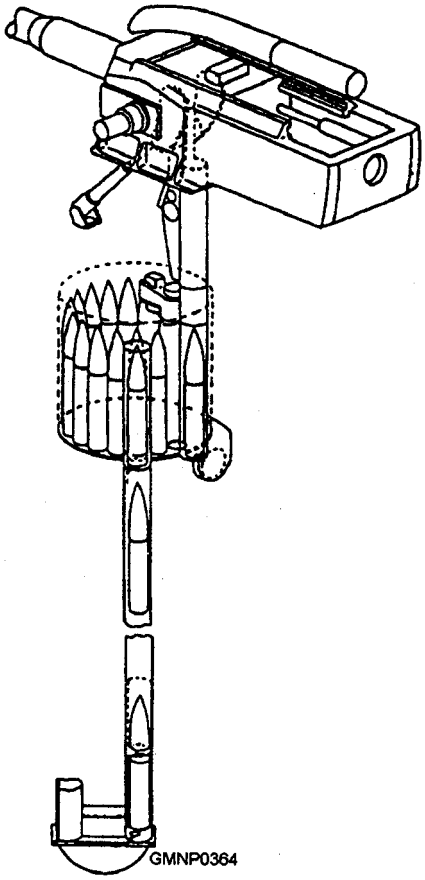

Figure 6-17.—First round in the upper hoist.

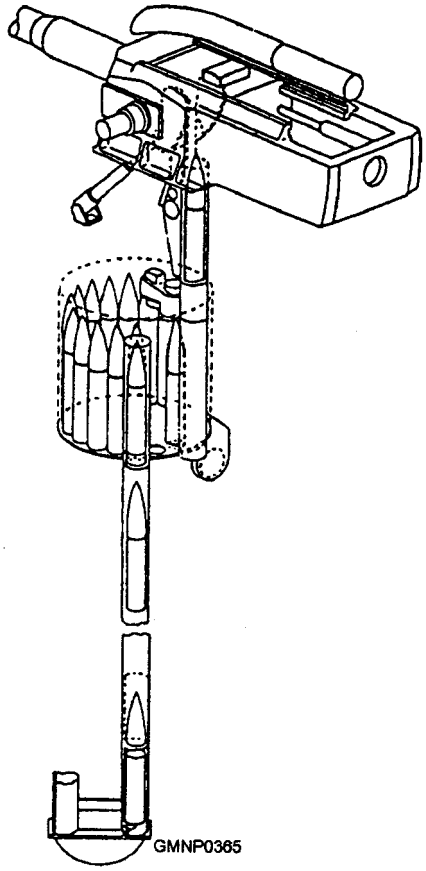

Figure 6-18.—First round raised into the cradle.

cradle unlatches and pivots upward (raises) to align with the gun bore (fig. 6-19).

The cradle completes the raise cycle and latches to the slide (fig. 6-20). The rammer extends, driving the round into the breech. At this time, the breechblock partially lowers (closes) to hold the round in the breech, while the cradle lowers to receive another round.

While the cradle is still raised and after the round has been rammed, the rammer retracts, and another round is ejected into the upper hoist (fig. 6-21).

With the rammer retracted, the cradle lowers, the breechblock closes completely, and the empty case tray lowers to the FIRE position (fig. 6-22).

With the loading system latched in the FIRE position, the gun fires and recoils (fig. 6-23). The breechblock opens, the empty case is ejected into the empty case tray, and another round is raised into the cradle by the upper hoist (fig. 6-24).

As the cradle raises to ram the second round, the empty case tray raises to align with the case ejector (fig. 6-25). The empty case is ejected out onto the deck at the same time the second round is rammed for tiring.

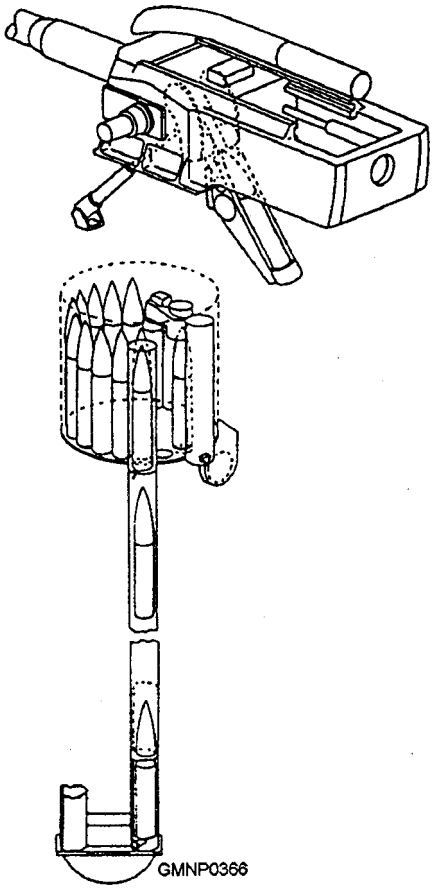

Figure 6-19.—The cradle raises.

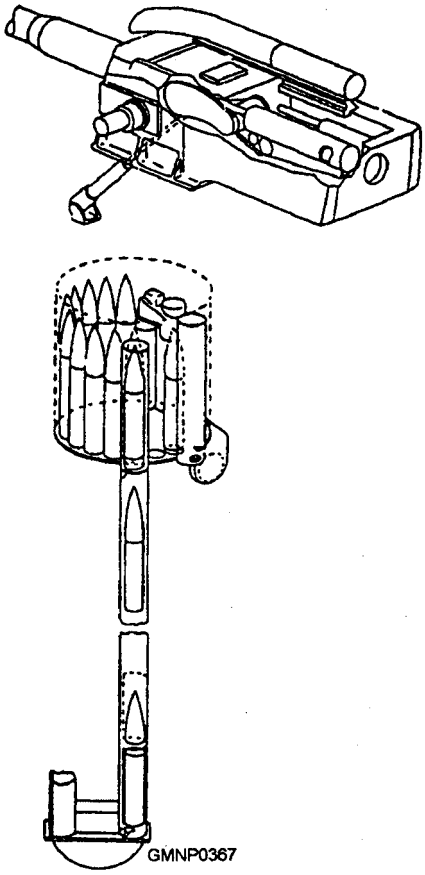

Figure 6-20.—Cradle completely up and rammer extending.

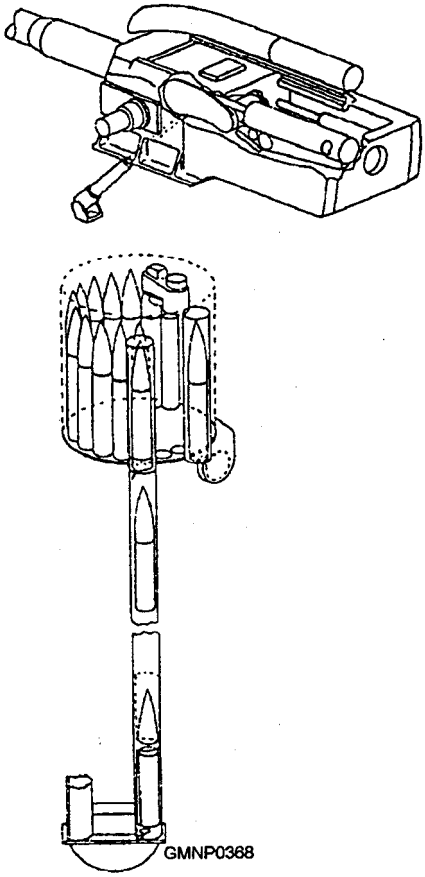

Figure 6-21.—Rammer retracting and loader indexing.

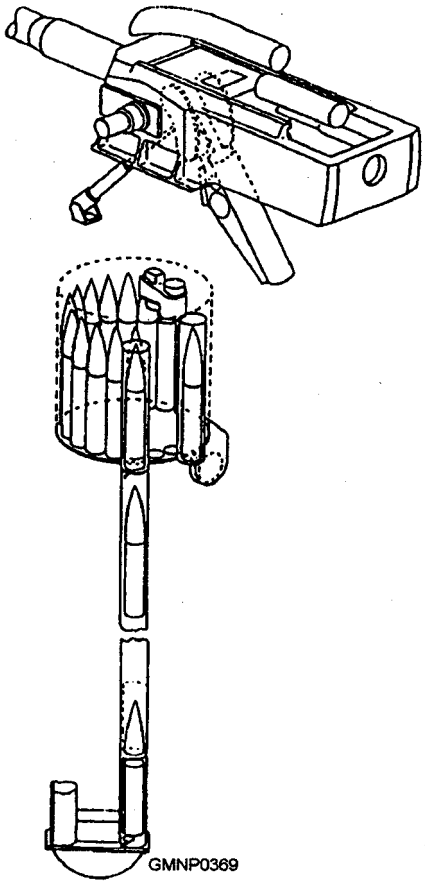

Figure 6-22.—Cradle lowers and empty case tray lowers to the FIRE position.

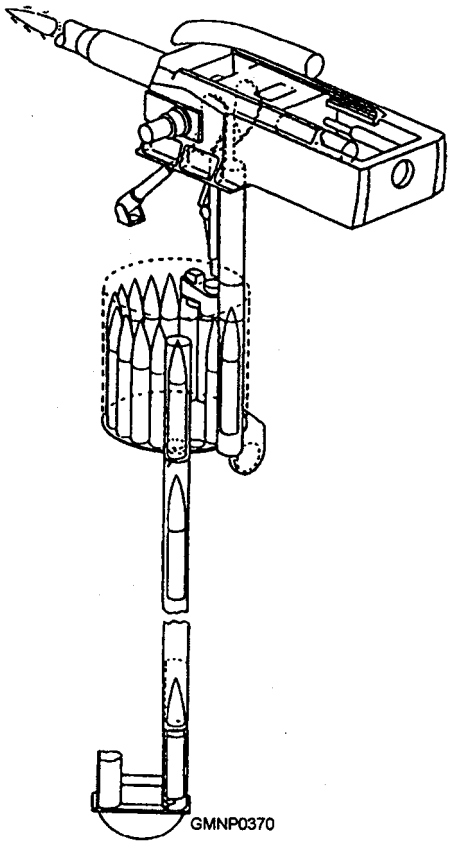

Figure 6-23.—The gun fires and recoils.

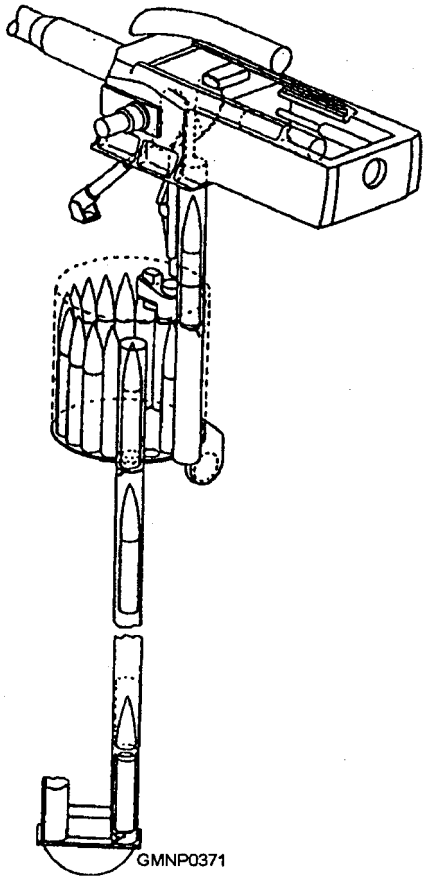

Figure 6-24.—The breech opens and the empty case is ejected.

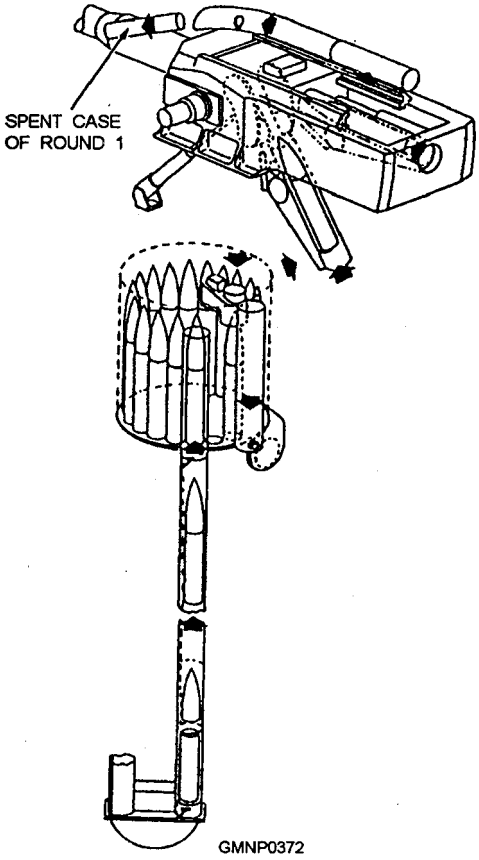

Figure 6-25.—The cradle and empty case tray raise to ram the second round and eject the empty case.

This completes one firing cycle. The loading system continuously keeps each station full as rounds are fired.

THE 76-MM MK 75 GUN

The Mk 75 gun (fig. 6-26) is a fully automated, remotely controlled gun mount that stows, aims, and fires 76-mm, 62-caliber ammunition. The system is currently aboard FFG-7 and PHM class ships along with the Mk 92 FCS. The design of the gun mount makes extensive use of lightweight corrosion-resistant alloys and modem engineering techniques. The result is a lightweight, compact, fast-firing, versatile weapon. It is primarily a defensive weapon used to destroy antiship cruise missiles. However, it can also be effectively used against surface and shore targets. The gun has a variable rate of fire of up to 80 rounds per minute with a range of up to 16,459 meters and a maximum altitude of 11,519 meters. The most notable innovation featured on this system is the automatic barrel cooling system. This allows sustained operation at high rates of fire without excessive barrel wear or the danger of a "cook off" if a misfire occurs.

The Mk 75 gun fires a somewhat limited variety of percussion primed ammunition types. The types of ammunition currently available include point detonating (PD), infrared (IR), radio frequency (RF), and blind-loaded and plugged (BL&P).

Crew Positions and Responsibilities

The gun mount crew consists of the mount captain, two loaders, and the safety observer.

The mount captain is stationed in the ammunition-handling room at the gun control panel (GCP). It is his or her responsibility to set the gun up for the desired mode of operation, then monitor it in case of a malfunction. In case of a malfunction or misfire, the mount captain supervises and directs the corrective action.

The two loaders are stationed in the ammunition-handling room during loading and unloading operations. Their primary duties are to load and unload the gun, clear misfires, and assist in corrective maintenance.

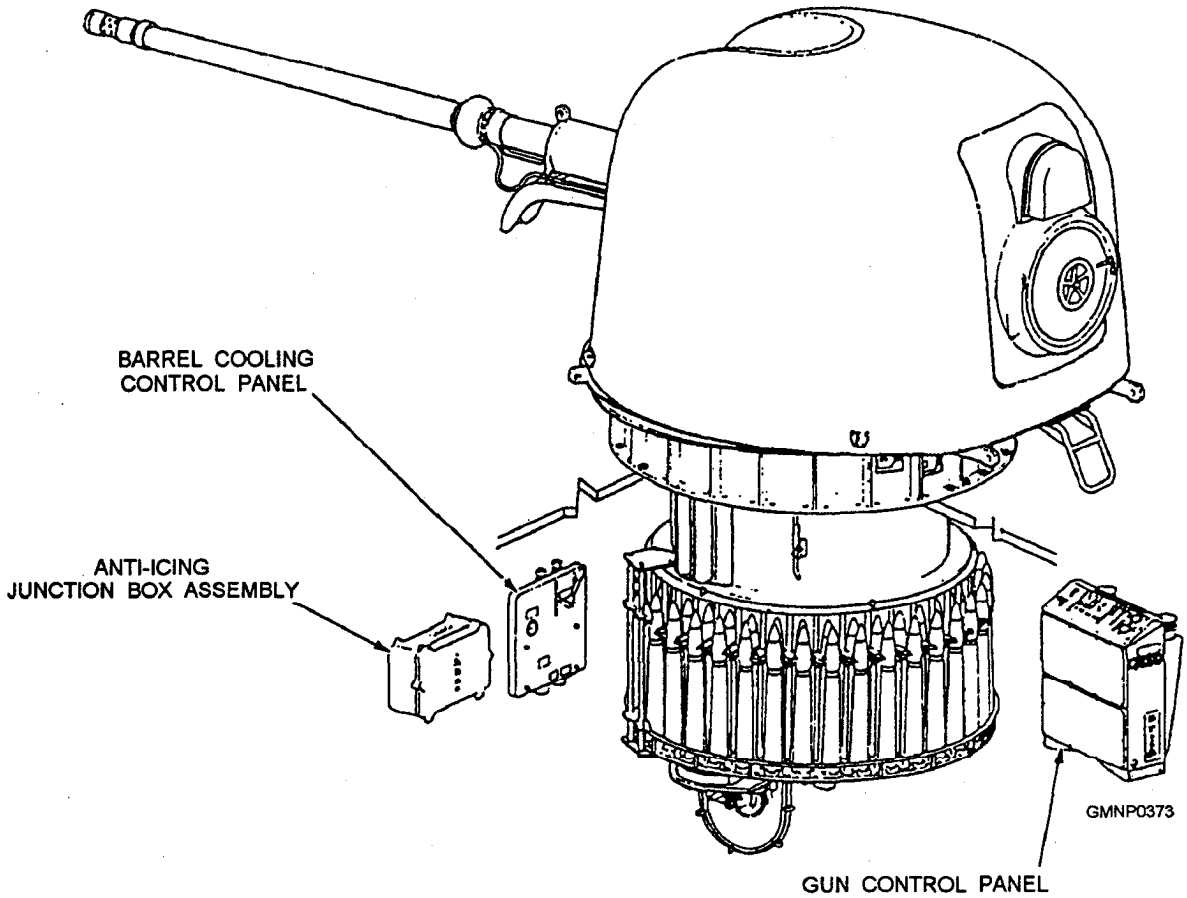

Figure 6-26—The Mk 75 gun system, general configuration.

The safety observer is stationed topside near the gun. His or her responsibility is to monitor the gun and the area around the gun for any unsafe condition. The safety observer is in direct contact with the mount captain.

We will now describe the loading system as we walk through a loading sequence.

Loading Sequence

The ammunition-handling system (fig. 6-27) for the Mk 75 gun mount moves ammunition from the revolving magazine to the last station loader drum, where the ammunition is subsequently deposited into the transfer tray, rammed, and fired. The handling system holds a maximum of 80 rounds. When a round is fired, each of the other rounds advances one position.

The handling system consists of the revolving magazine, the screw feeder and hoist system, the right and left rocking arm assemblies, and the hydraulic power unit. The entire loading system moves with the gun in train. The loader drum, which is a slide-mounted component, moves with the gun in elevation.

The hydraulic power unit, mounted to the carriage, provides hydraulic pressure to operate the loading system.

Ammunition is manually loaded into the revolving magazine. The revolving magazine consists of two concentric circles of stowage cells, each holding 35 rounds of ammunition. The revolving magazine turns when the hydraulic motor rotates the screw feeder.

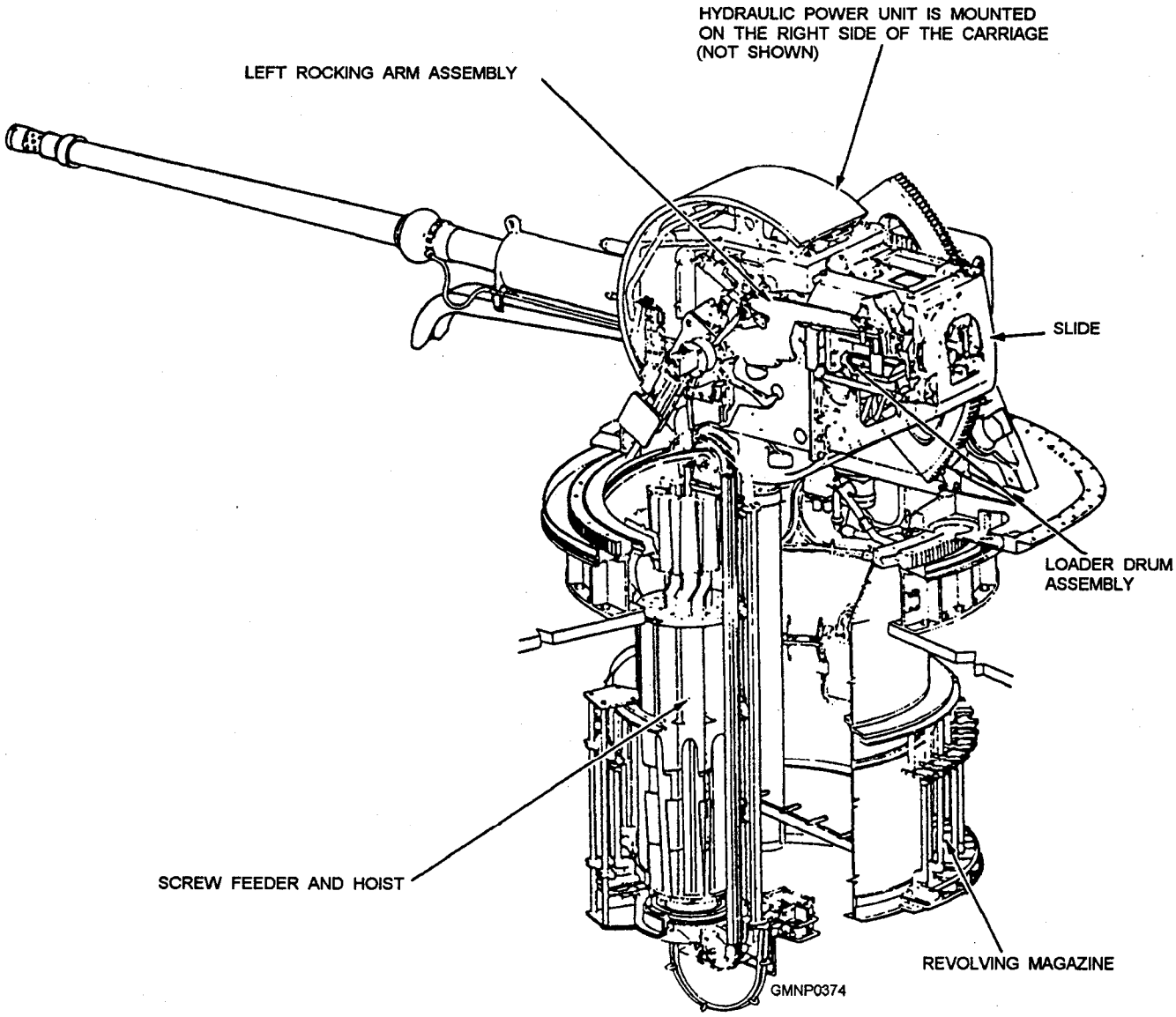

Figure 6-27.—The Mk 75 gun-loading system, major components.

During rotation of the revolving magazine and screw feeder (fig. 6-28), around moves from the inner circle of stowage cells to the screw feeder. When a round leaves the inner circle of cells, a round from the outer circle replaces it, leaving an empty cell in the outer circle.

When a round reaches the screw feeder, it is lifted in a spiraling manner by the hoist lift pawl assemblies of the hoist as the screw feeder rotates (fig. 6-29). The screw feeder, with a capacity of six rounds, delivers a round to the rocking arms. The rocking arms alternately

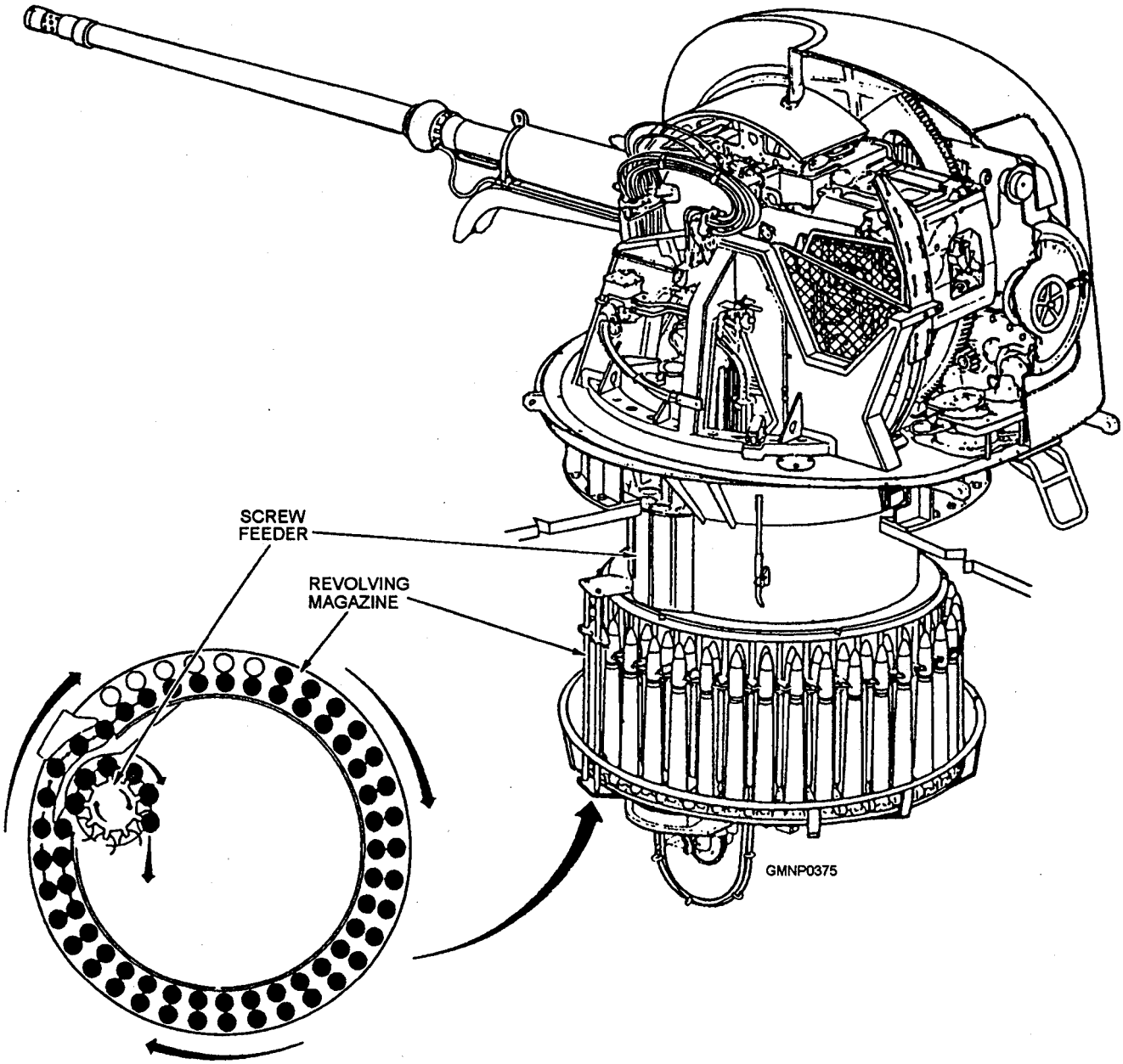

Figure 6-28.—Movement of rounds in the revolving magazine and screw feeder.

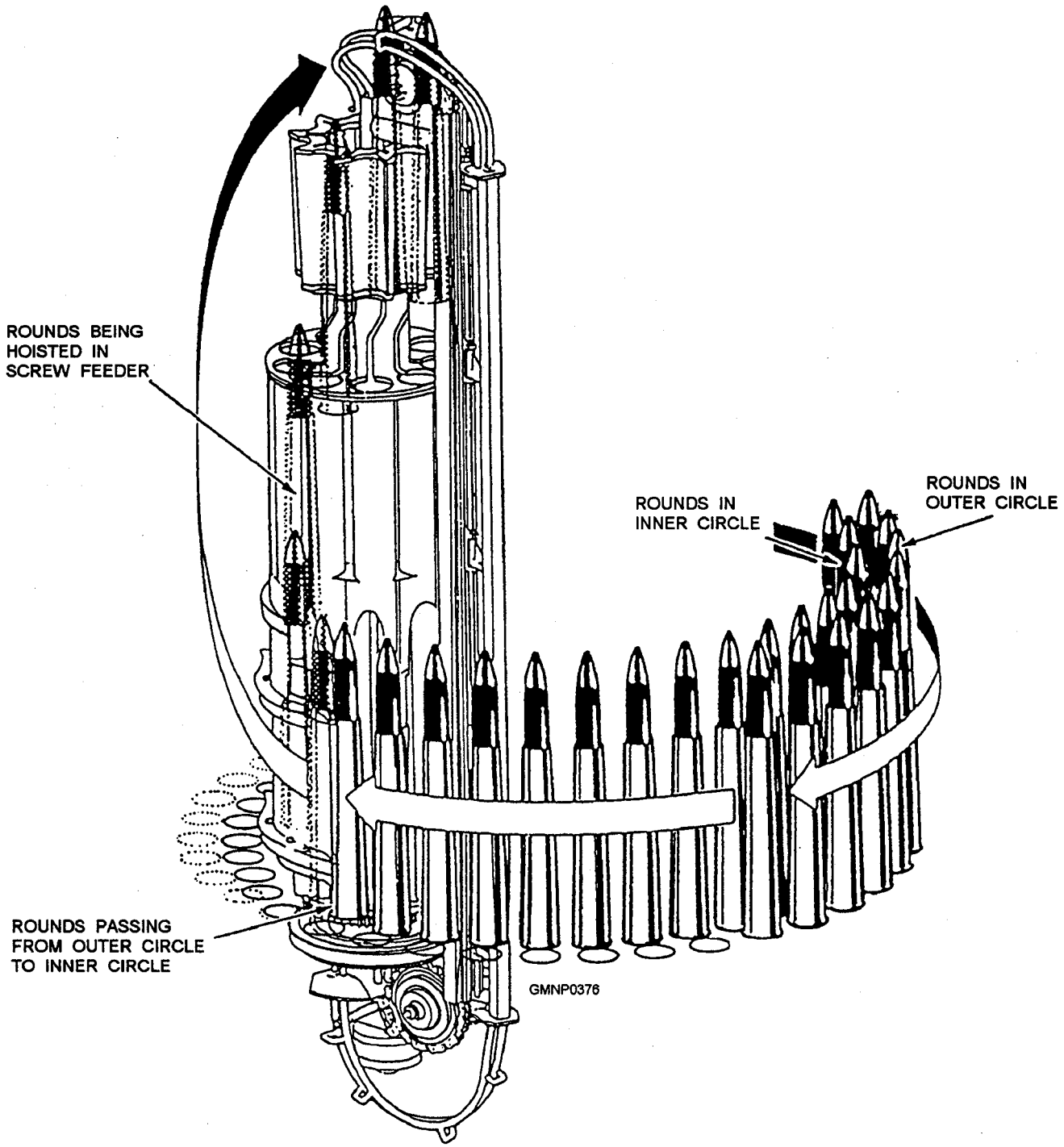

Figure 6-29.—Ammunition flow from the revolving magazine through the screw feeder.

raise rounds to the loader drum (fig. 6-30). While one rocking arm is lifting a round to the loader drum, the other arm is returning empty to pick up the next round from the screw feeder.

The loader drum has a capacity of four rounds. As the loader drum receives around from the rocking arm, it rotates to deposit the round in the last station of the loader drum and then into the transfer tray for subsequent ramming and firing (fig. 6-31). The Mk 75 gun system uses a percussion firing system.

During recoil, the breechblock is lowered and the empty case is extracted into the empty case tray from which it is ejected out of the system. This completes the loading cycle for one round.

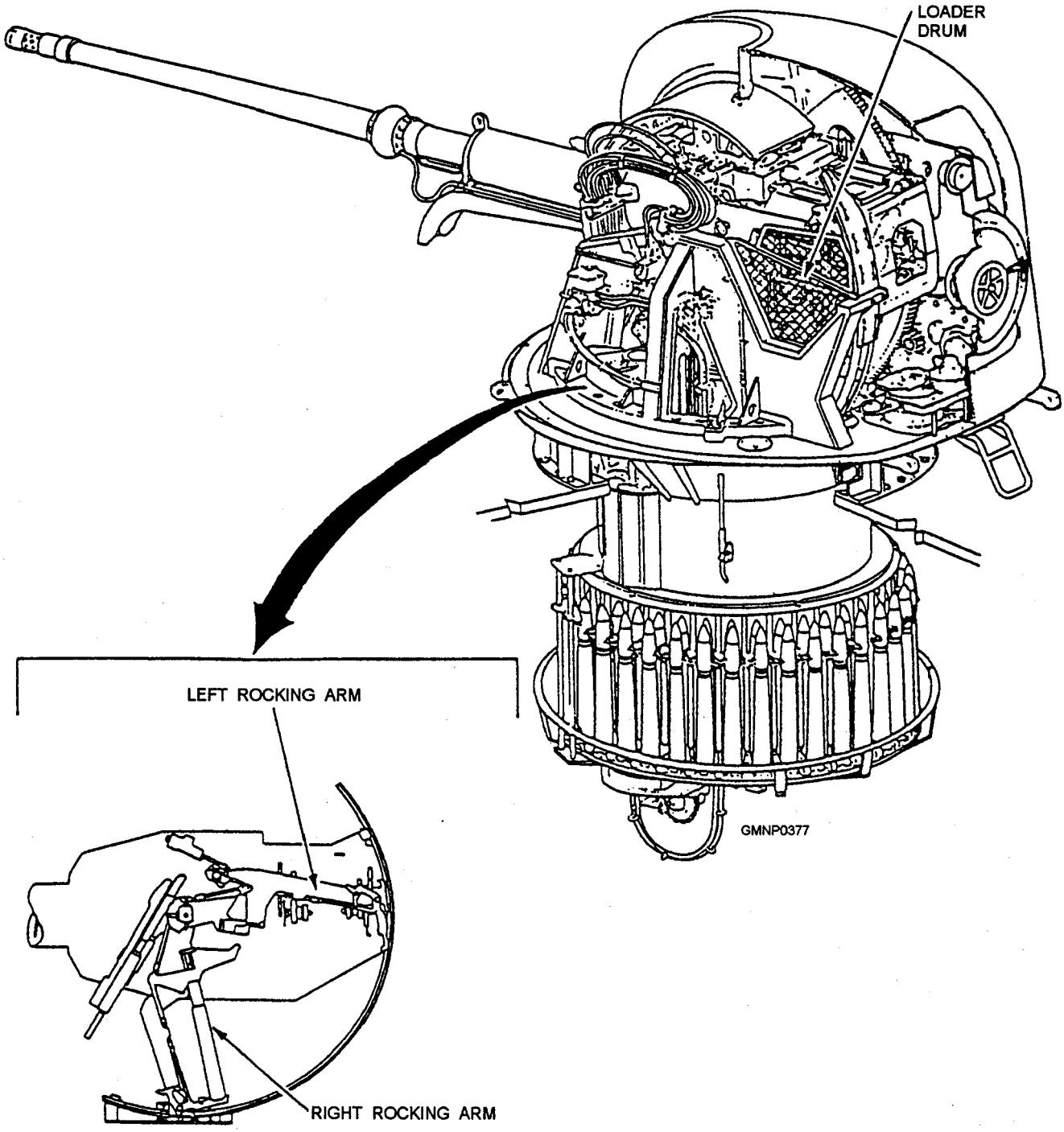

Figure 6-30.—Movement of rounds from the screw feeder to the loader drum.

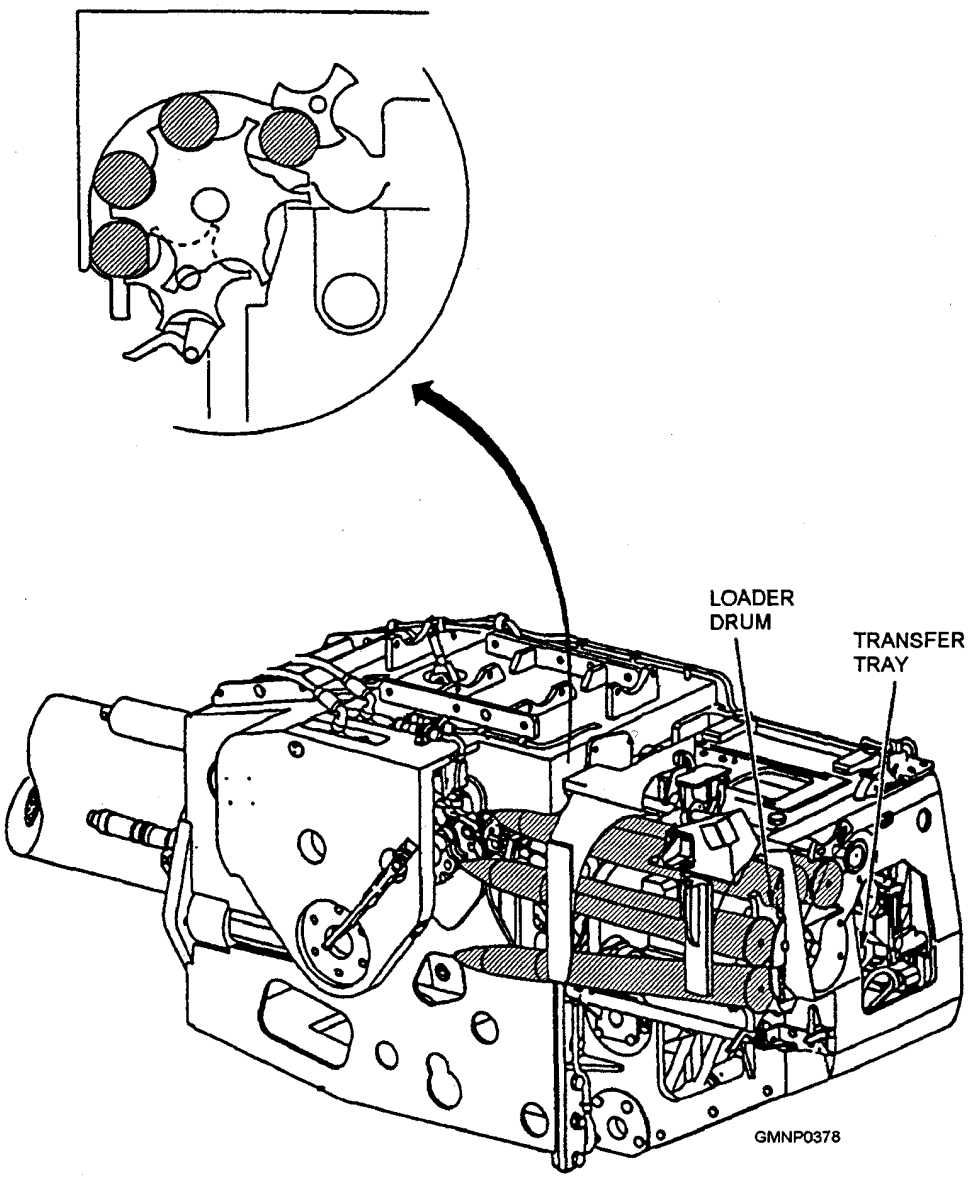

Figure 6-31.—Movement of rounds in the loader drum.

GUN OPERATION AND MISFIRE PROCEDURES

LEARNING OBJECTIVES: Discuss the maintenance, prefire, and misfire requirements for current naval guns.

The power and complexity of the gun mounts we just examined call for a high degree of skill and knowledge on the part of the operator to ensure safe, efficient operation. Gun firing operations are very dynamic in nature. The operator must possess a thorough knowledge of the capabilities of the system to be effective. As mount captain, you will coordinate the actions of your gun crew while controlling the operation of the gun. This includes prefire inspections, gun loading and firing, changing ammunition types, down-loading, and post-fire cleanup. When casualties occur, you will also coordinate the troubleshooting and repair effort. If a casualty results in a misfire situation, you will supervise the crew in clearing the round from the gun. A misfire is the failure of a round of ammunition to fire after the initiating action. A hangfire is a firing delay beyond the normal ignition time after the initiating action. Because of the danger of a hangfire, you should always wait 30 seconds before opening the breech of a gun that has misfired.

A casualty situation involving a misfire is very dangerous. Having a hot gun further compounds the problem. A hot gun condition exists when the gun barrel temperature is raised sufficiently to cause the danger of ammunition cook off. Cook off occurs when some ammunition component (powder or projectile) reacts (burns or detonates) due to heat absorbed from the walls of the gun barrel. The exact procedure for clearing misfired rounds from the chamber of a gun varies from one gun to the next and will not be covered here. However, we will provide you with a general overview of some common elements in the procedure.

While firing, the mount captain monitors how many rounds have been fired and notifies his or her crew and CIC when a hot gun condition is reached. On a 5"/54 gun mount, this occurs after 50 rounds have been fired in 4 hours or less. When a misfire occurs, the mount captain notes the time of the misfire, makes additional attempts to fire using alternate firing circuits, and determines if the breechblock is closed. All of this information is passed to CIC and the gun crew. The mount captain then uses a safe clearing time predictor chart to determine if a lo-minute safe clearing time exists. The time duration of firing and the number of rounds fired are used to determine whether or not a lo-minute safe clearing time exists. If a lo-minute safe clearing time exists, the mount captain then requests permission from CIC to clear the gun according to the procedures prescribed in *Clearing of Live Ammnition from Guns,* SW300-BC-SAF-010. A cold gun is cleared one step at a time, with the mount captain getting permission from CIC for each step. However, after getting permission to clear the gun in a hot gun situation, the mount captain takes charge and carries out each step on his or her own authority while CIC monitors the situation.

It is useful to consider here that a misfire can be caused by a variety of casualties. Given the complex nature of modem gun systems, their firing circuits are designed to act as safety interlocks that prevent firing until all necessary conditions have been met. The round may be chambered and the breechblock closed, but if all the surrounding equipment is not in place with all the correct switches energized, the gun will not fire. A failed or misaligned switch, a sticking or misaligned latch mechanism, or a faulty control circuit component can cause a misfire. Misfires are caused by these types of casualties often more frequently than by faulty ammunition. While a misfire caused by a faulty powder charge is remedied by replacing it, electronic and mechanical casualties must be diagnosed and repaired before firing can resume. Verifying your equipment position and checking a few connections at the beginning of a misfire could save time in clearing that misfire. The problem could be as simple as the firing lead having come loose from the firing lock.

While clearing the gun, it must be kept on a safe fire bearing. This is to avoid accidentally hitting friendly forces when clearing the round through the muzzle. If the gun is hot, commence external cooling immediately. External cooling consists of attaching a fire hose to the barrel at the gun shield so that it sprays cool fire main water on the outside of the barrel around where the projectile is seated. Internal cooling can only be started after the propelling charge has been removed. Internal cooling uses a straight applicator that is inserted in the barrel to spray cooling water around the projectile. If the propelling charge is not removed and happens to cook off with the barrel full of water, the blast would demolish the gun.

The exact procedures for clearing misfired ammunition from guns used by the Navy, including small arms, are found in *Clearing of Live Ammunition from Guns,* SW300-BC-SAF-010. The information provided in this manual should not be used as a reference for actual operations.

SUMMARY

In this chapter we described gun positioning and firing equipment. We reviewed the gun systems currently in the fleet, focusing on their loading systems. In subsequent chapters we will describe how each of these systems is used with a fire control system, how the systems are aligned, and other maintenance requirements associated with guns. The chapter concluded with a discussion of gun operation and misfire procedures.

CHAPTER 7

GMLSs: PRIMARY FUNCTIONS AND DESCRIPTIONS

The purpose of any delivery unit is to place (launch) a weapon into a desired flight path. That task must be done safely, efficiently, rapidly, and as frequently as the situation demands.

We will discuss the major GMLSs maintained by GMs. There are other missile launching systems in use, but they are not manned by GMs. These systems include the NATO Seasparrow and the Harpoon and Tomahawk canister launchers.

Before continuing, let's define the terms *mark* and *modification*, commonly abbreviated Mk and Mod, respectively. Each assembled unit of ordnance equipment is identified by a name, a mark number, a modification number, and a serial number. This information is stamped directly on the equipment or on an attached nameplate. A mark number designates a major change in design. Modification numbers are added when there has been minor, but significant, design alterations. Units of identical design have the same name, mark, and mod numbers, but are assigned different serial numbers.

The missile launcher is an integral, but separate, element of the weapons system. The launcher provides support for the missile before and during launch. Initial missile flight orientation is provided by aiming the axis of the launcher along the computed line of fire. The launcher also provides two major electrical connections to the missile. One connection supplies preflight missile orders that are generated by the missile fire control system (MFCS) computer. The other connection supplies firing (ignition) voltage to the propulsion unit of the missile. The firing signal is normally initiated by the weapons direction system (WDS) and weapons direction equipment (WDE).

Launchers may be rigidly attached to the ship or they may rotate in train and elevation axes. The Mk 41 Vertical Launching System (fig. 7-1) is an example of a rigid launcher. The Mk 26 and Mk 13 Mods 4 and 7 are examples of rotating axes launchers.

As you study chapters 7 and 8, pay particular attention to the terminology associated with each system. For effective communication, we cannot overemphasize the necessity for using correct technical

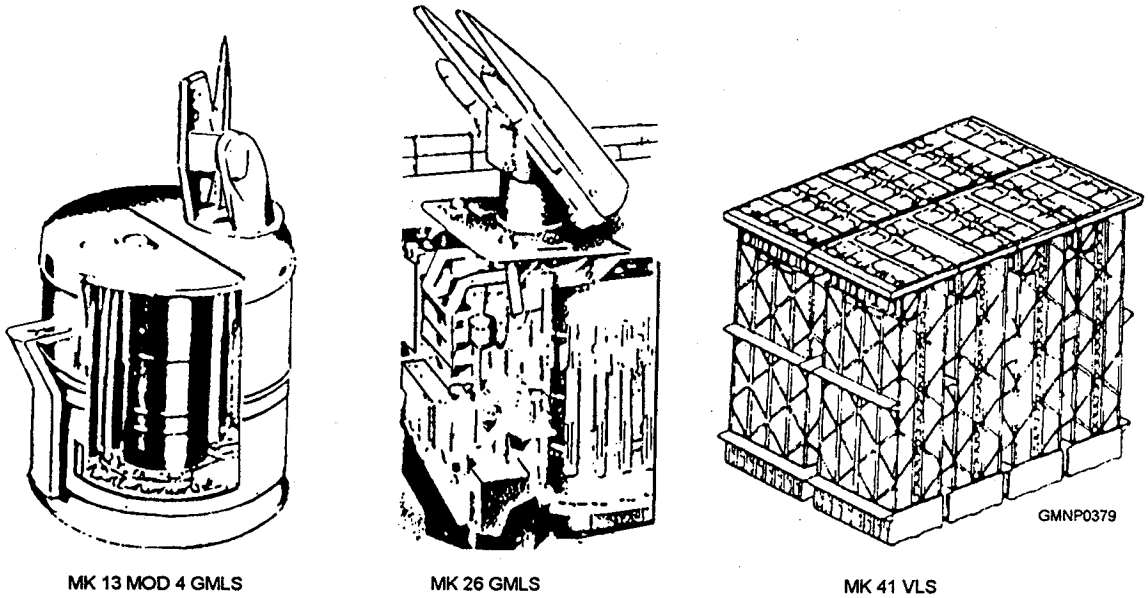

Figure 7-1.—Major GMLSs.

terminology. For example, what is the difference between a fixed rail and retractable rail? These terms refer to a common launching system component whose basic function is to stow or guide a movement of the missile. The use of correct terminology when talking about a particular system is absolutely essential. Some system components do have slang names that are generally recognized by all GMs and, if appropriate and within good taste, the manual will mention them. For more "colorful" definitions, go ask your chief!

Additionally, throughout the chapter, some component descriptions will include various size dimensions. They are given only so you will have a better idea of a physical arrangement.

MK 13 MODS 4 AND 7 GMLS

LEARNING OBJECTIVES: Explain the purpose/function of the Mk 13 Mods 4 and 7 GMLS major components.

We will now study the Standard launching system by covering a launcher commonly known as the "one-armed bandit." The Mk 13 Mod 4 GMLS is installed aboard FFG-7 *Oliver Hazard Perry-class* ships and the Mk 13 Mod 7 is installed aboard CGN-36 *California-* class ships. They provide a varied tactical arsenal of missiles to engage air and surface targets. It stows, selects, identifies, loads, aims, and fires Standard SM-1, SM-2, and Harpoon missiles.

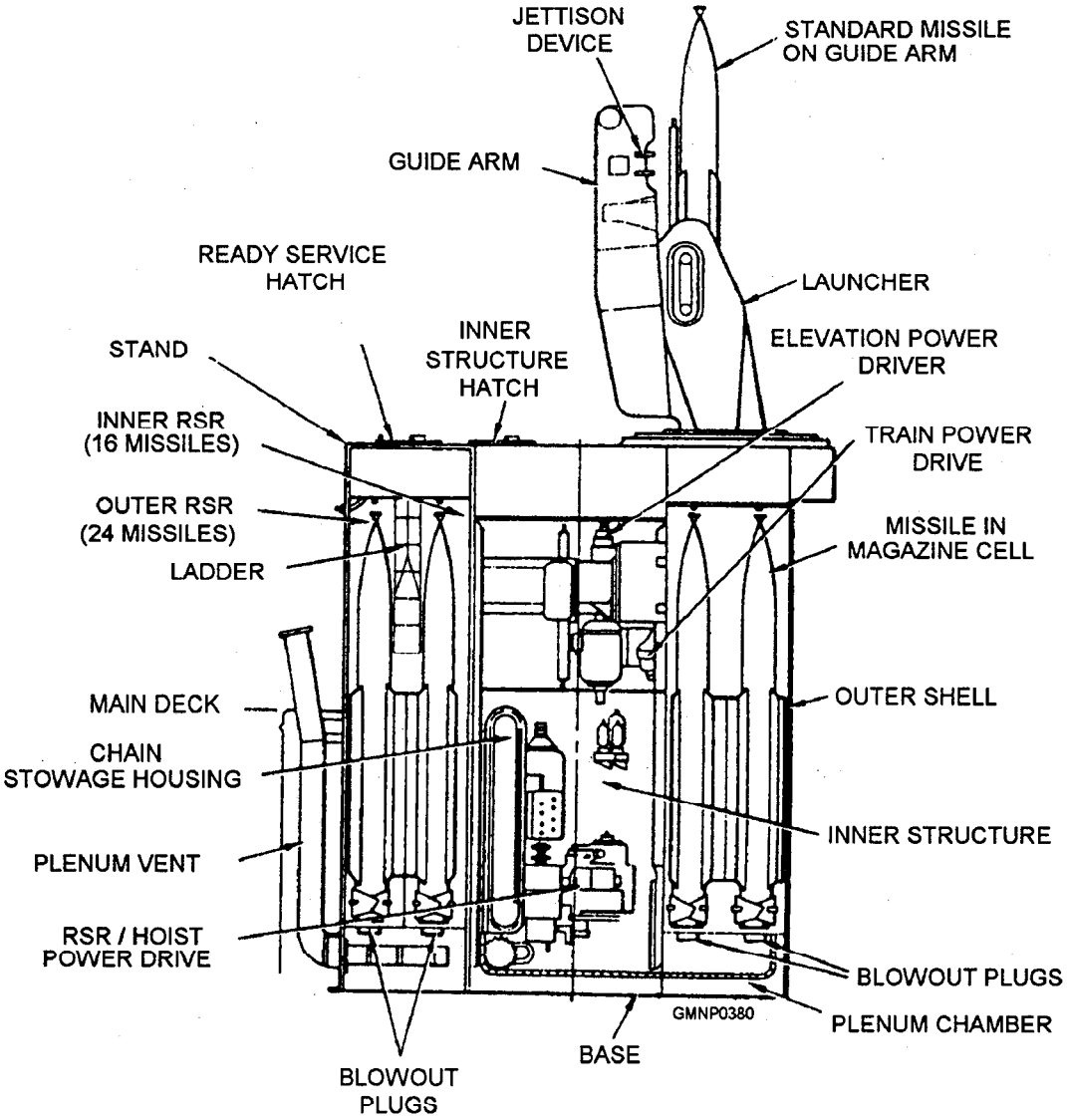

Figure 7-2.—Mk 13 Mod 4 GMLS.

The Mk 13 Mod 7 GMLSs were originally built as Mods 0, 1, and 3, but because of the design changes in the control system giving the launcher Mod 4 characteristics, they are now designated as Mod 7s. The text will address the Mk 13 Mod 4 configuration. The Mod 7 has the same configuration as the Mod 4.

CAPABILITIES

The Mk 13 Mod 4 (fig. 7-2) GMLS can stow up to 40 missiles, one of which will be a guided missile training round (GMTR) in the rotating ready service ring (RSR) cells of the magazine. The outer ring stows 24 missiles and the inner ring stows 16 missiles. The system is capable of identifying up to seven types of missiles, A through G, plus the GMTR.

The main structural units of the magazine are the base, the outer shell, the inner structure, and the stand. A plenum chamber, attached to the base, vents gases if a missile accidentally ignites in the magazine. The inner structure houses, among other components, the train and elevation power drives, the RSR/hoist power drive, the launcher relay control box, and the missile dc power supply. In operation, the RSR rotates (between the outer shell and the inner structure) to position the selected missile at the hoist station for loading onto the launcher.

The missile launcher carriage has unlimited motion in train. The elevation load angle is 90°. The two train load positions are 0° (inner ring) and 180° (outer ring) (fig. 7-3).

Automatic pointing cutout systems prevent pointing a missile at any part of the ship. A firing cutout mechanism prevents firing missiles in areas hazardous to personnel and at the ship's structure. Individual ship's structure determines pointing and firing cutout zones.

A dud-jettison unit is an integral part of the launcher guide. The dud-jettison unit ejects missiles overboard that fail to fire and are unsafe to return to the magazine.

Modes of Control

The Mk 13 GMLS has two modes of control: automatic control and step control. Automatic control is the normal mode for loading a missile onto the guide arm and for unloading a missile from the guide arm to the magazine. The weapons control system (WCS) selects continuous loading or single loading to load and launch missiles in automatic control. Continuous loading initiates loading and launching until the magazine is empty or until WCS baits the operation.

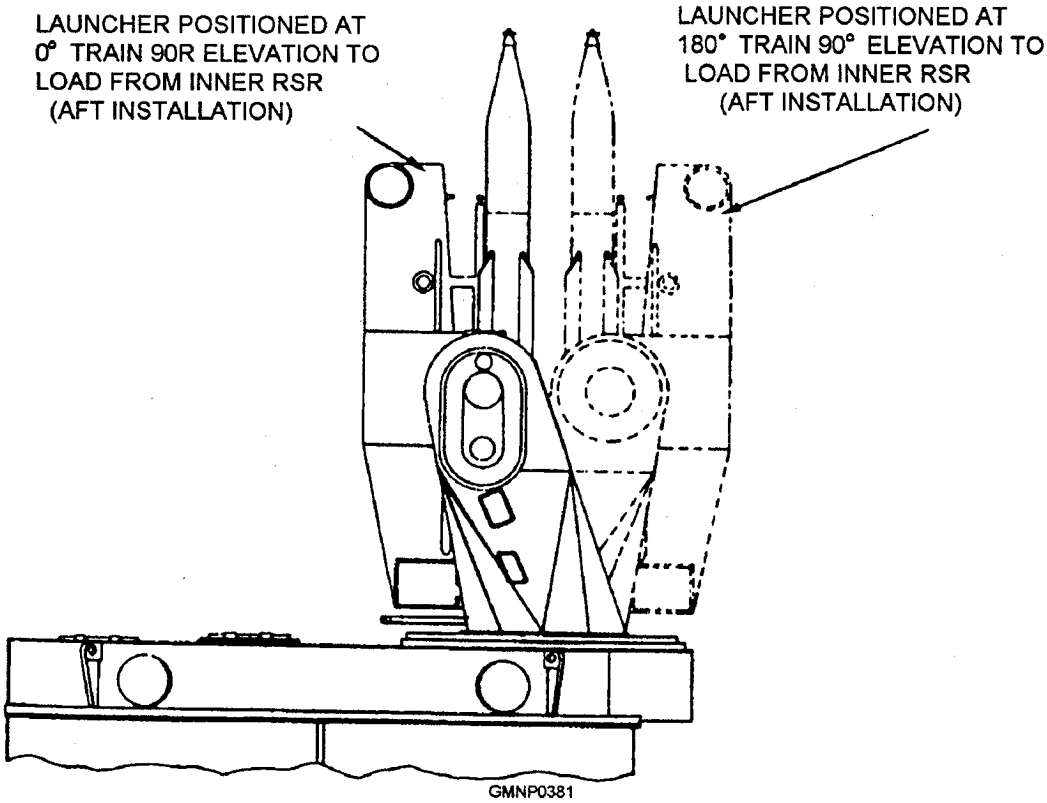

Figure 7-3.—Mk 13 Mod 4 GMLS, launcher load positions.

Single loading initiates the same operations as continuous loading, except that after launching one missile, the launcher trains and elevates to the LOAD position to await further orders. The operation resumes when WCS orders another single loading or continuous loading.

Also, if properly set up, the fire control system (FCS) can remotely light off the launching system and auto-load (or auto-unload) a selected type of missile. The launcher can be aimed and a missile fired before the GM can return from the mess decks with a fresh cup of coffee.

Step control is the step-by-step sequencing and operation of the Mk 13 GMLS components by manual switching at the EP2 panel. The system can be operated in step control to load and launch missiles in a tactical situation if the automatic control circuitry becomes inoperable. Missiles may be loaded onto the guide arm in step-load and maybe unloaded into the magazine in step-unload. System components may also be cycled in step-exercise. Interlocks in the system ensure that selected step control functions are sequentially correct. Indicating lamps on the EP2 panel signal completion of each component function.

The launcher train and elevation systems operate under remote and local control signals. Remote orders are generated by the FCS computer. Local orders come from synchro transmitters within the launching system control.

Functional Operation

Upon selection of a Standard or Harpoon missile in the magazine, the weapon is hoisted onto the single guide arm. Harpoon missiles receive initial warmup on the guide arm. (Standard missiles do not require warmup.)

The launcher trains and elevates in response to order signals from WCS to aim the missile toward the predicted target. When the launcher synchronizes within 10 either side of the ordered position and the missile is ready internally, WCS may initiate firing. After the missile fires, the launcher automatically returns to the LOAD position to receive the next missile selected for loading from the magazine.

During continuous launching operations, the system is capable, under ideal conditions, of a successive firing rate of (1) Standard missiles at 10-second intervals and (2) Harpoon missiles at about 22-second intervals. This action continues until a cease-fire order is given or the missile capacity (excluding the GMTR) of the magazine is exhausted.

Personnel Requirements

A launcher control station contains controls and indicators to regulate and monitor launching system operations. Under normal operating conditions, the Mk 13 GMLS requires the services of a launcher captain and a safety observer. The launcher captain supervises the overall operation of the system and performs all functions at the EP1 and EP2 panels as directed by WCS. The safety observer watches the launcher area and warns the launcher captain of unsafe conditions.

LAUNCHER

The Mk 13 GMLS consists of three major component areas, which are the launcher, the magazine, and the launching system control. We will discuss the launcher first, then the magazine. Again, watch the terminology.

The launcher (fig. 7-4) is a self-powered major assembly that supports, aims, and prepares the missile for firing. Part of the launcher is on top of the stand, while the rest of it sits within the magazine structure. The main components of the launcher are the guide, the carriage, and the train and elevation power drives.

Launcher Guide

The single arm launcher guide is mounted between the left- and right-hand trunnion supports and consists of the guide arm structure and a yoke. The guide arm holds and prepares the missile for firing. The yoke is an extension of the guide structure, or weldment. It pivots on trunnions extending from the left- and right-hand trunnion supports. The yoke also provides a weatherproof housing for some guide components and serves as a passage for electrical cables and fluid lines.

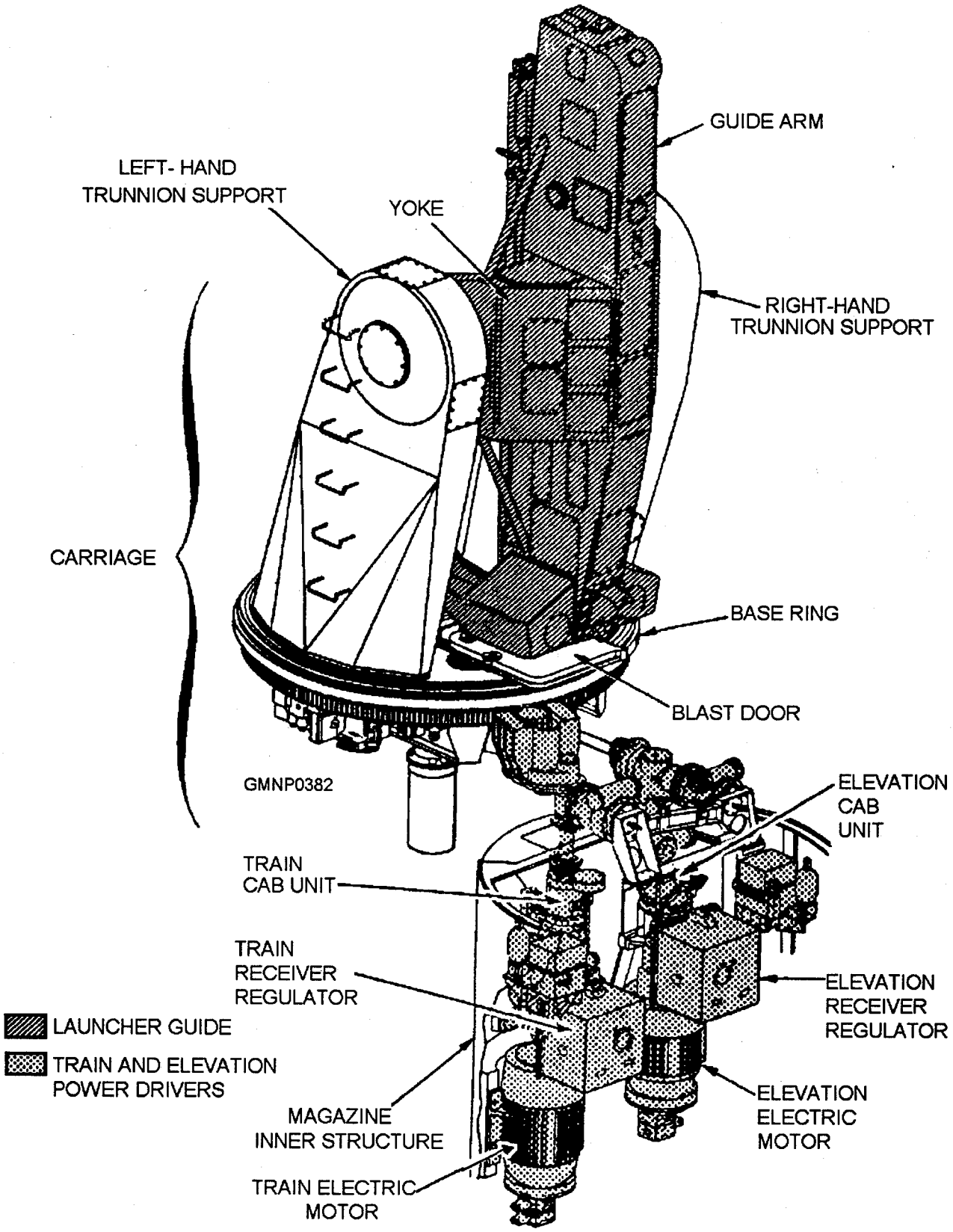

Figure 7-4.—Mk 13 Mod 4 GMLS, launcher.

FIXED GUIDE RAIL.— The fixed rail (fig. 7-5) is slightly less than 30 inches long and is secured to the lower or aft end of the guide arm structure. In addition to forward and aft shoe tracks, it contains an internal track for the hoist chain, the pawl, and the rollers. A cam track engages a special pair of rollers on the chain to compensate for any hoist chain overtravel as it extends up to the launcher. This is called the adjustable buckling chain link and is shown in figure 7-12. The cam track directs any excess chain into an upward curving chamber midway within the fixed rail.

An actuator arm in the forward left section of the fixed rail is a safety device. Through mechanical and hydraulic interlocks, it prevents the aft-motion latch from prematurely retracting during an unload cycle until the hoist pawl properly engages the aft missile shoe.

LAUNCHER RETRACTABLE RAIL.— The launcher retractable rail is an 8-foot-long unit that pivots between two positions. It remains extended except when the fired missile goes into free flight and during a jettison operation. During missile firing, it guides the missile for the first 20 inches of travel and then retracts so the aft shoe and fins do not strike it. For jettisoning a missile, the rail must be in the retracted position to engage the jettison mechanism.

A pivot unit connects the aft end of the retractable rail to the guide arm structure. The two retract shafts at the forward end of the retractable rail extend or retract the rail by means of the rail operating piston and control valve block. Latches secure the rail in the extended or retracted position. A cable within the right-hand shaft contains leads for the rocket motor igniters. The left-hand shaft contains some of the components of the rail retract trigger.

The rail retract trigger is a pivoting bar that protrudes through a slot at the forward end of the retractable rail. When contacted by the forward shoe of the fired missile moving forward, the trigger initiates the mechanical and hydraulic actions that retract the rail.

The arming tool is located between the rocket motor igniters. It mechanically opens and closes the circuitry between the missile firing contacts and the ignition squibs of the rocket motor. The tool is a cylindrical piece that contacts the arming lever of the missile. It is actuated by a spring-loaded rod and linkage mechanism attached to the latch lock of the forward-motion latch. Disengaging the latch lock arms the rocket motor.

Aft-Motion Latch.— The aft-motion latch (fig. 7-5, Detail B) is located near the pivot point of the retractable rail. This device is a stop that prevents a missile from moving backward on the retractable rail. The latch is a hydraulic piston that extends behind the aft shoe of the missile. One of its associated mechanisms is a rod that mechanically detects when a missile is on the guide arm. This rod also provides a discharge path for electrostatic charges on the missile surface. Another plunger of the aft-motion latch pivots a piece on the hoist pawl to disengage it (hoist pawl) from the aft shoe of the missile.

Forward-Motion Latch.— The forward-motion latch (fig. 7-5, Detail B) is a dual-purpose stop. It acts as a positive stop when the hoist raises a missile onto the retractable rail. Until missile firing or jettisoning, the latch also restrains the missile from moving forward on the rail and falling onto the deck.

The latch is a steel piece that pivots into and out of the track chamber of the retractable rail, where it makes contact with the aft shoe of the missile. The forward-motion latch and its operating mechanism provide a 2,320-pound restraining force that holds the missile on the guide arm. When fired or jettisoned, the missile overcomes this force, pivoting the latch out of the track chamber.

The forward-motion latch lock is a movable piece that bears against the forward-motion latch. The lock provides the positive stop when the hoist raises a missile onto the retractable rail. During the missile firing sequence, a release piston disengages the latch link. Through linkage, this action causes the arming tool to arm the missile.

The Mk 13 also has a key-operated lock in the release piston linkage. When closed, the key-operated lock prevents the forward-motion latch lock from disengaging and, in turn, causing the missile to arm. The launcher captain uses the keylock as a safety device to prevent accidental arming of the rocket motor during missile checkout or inspection.

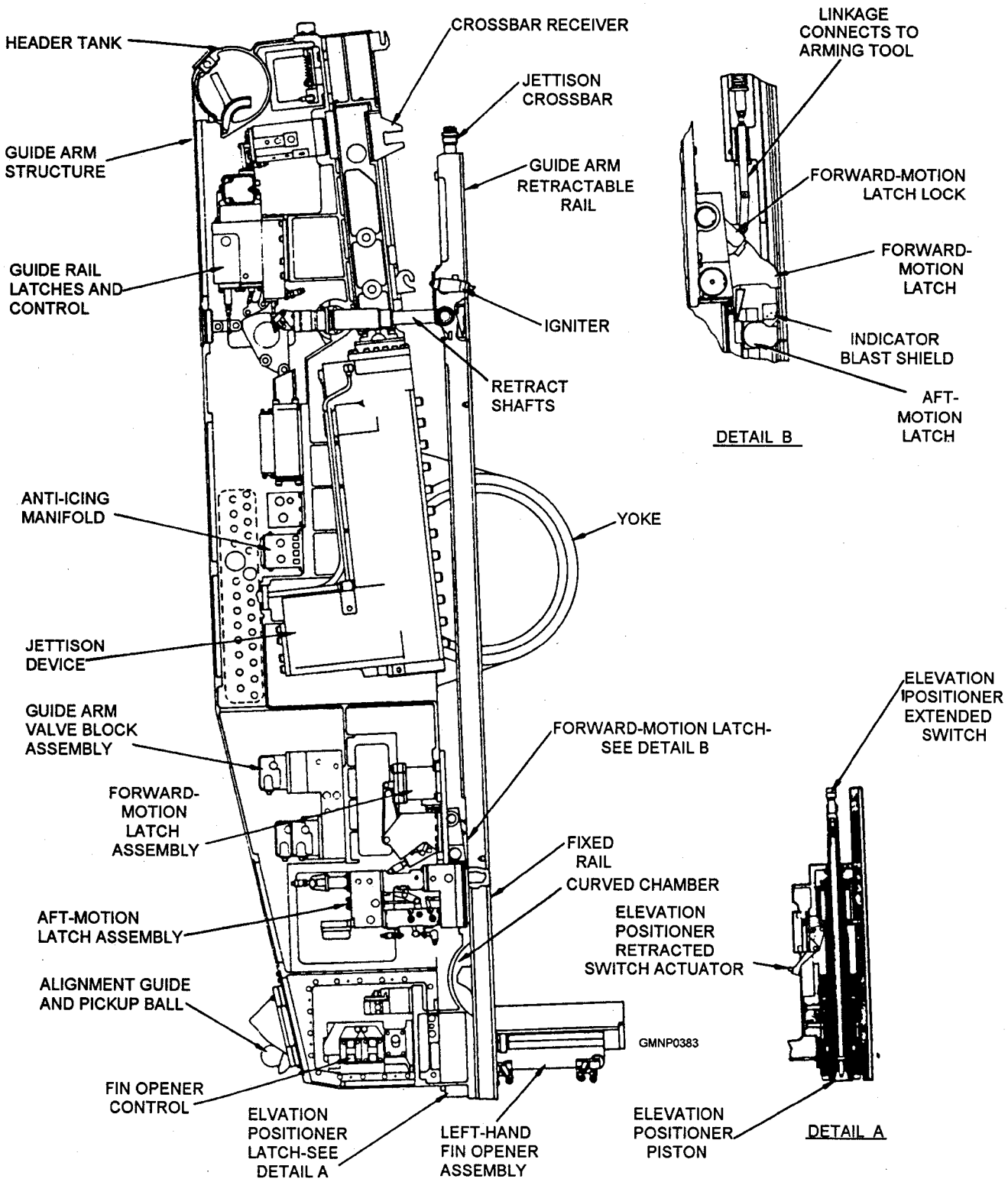

Figure 7-5.—Guide arm.

FIN OPENER AND CONTACTOR ASSEMBLY.— Functionally, the identification probe (fig. 7-6) is used twice in system operation. During an initial strikedown on-load of a missile, the fin opener assembly is extended to the missile. The probe connects the missile-type information to the control system of the launcher. There it is stored in the identification memory circuits as missile-type and cell-location data. When this action is accomplished, the fin opener assembly is disengaged and the missile may be unloaded into a cell.

During a load-and-fire operation, the fin opener assembly and probe are engaged again to recheck missile identification. If the type of missile on the guide matches the type of missile ordered from the RSR, preflight orders/Harpoon warmup are applied to the missile. Otherwise, circuits to the 23-pin contactor will remain open and the incorrect missile cannot be launched.

ELEVATION POSITIONER.— The elevation positioner consists of a hydraulic piston and a latch at the aft end of the guide arm structure (fig. 7-5, Detail A). When the blast door is open and the launcher guide is at 90° elevation, the tapered nose of the piston extends down to engage a spud on the door. This locks the launcher guide to the carriage. The piston, or positioner, retracts up into a bore within the guide arm structure to allow launcher elevation movements. The latch prevents the positioner from springing out due to a loss of hydraulic fluid pressure or because of vibration.

Carriage

The carriage (fig. 7-7) is mounted on the magazine stand and is the support structure for the launcher guide. The carriage rotates in response to mechanical movements of the train power drive and transmits the mechanical movements of the elevation power drive to the launcher guide. In addition, the carriage connects

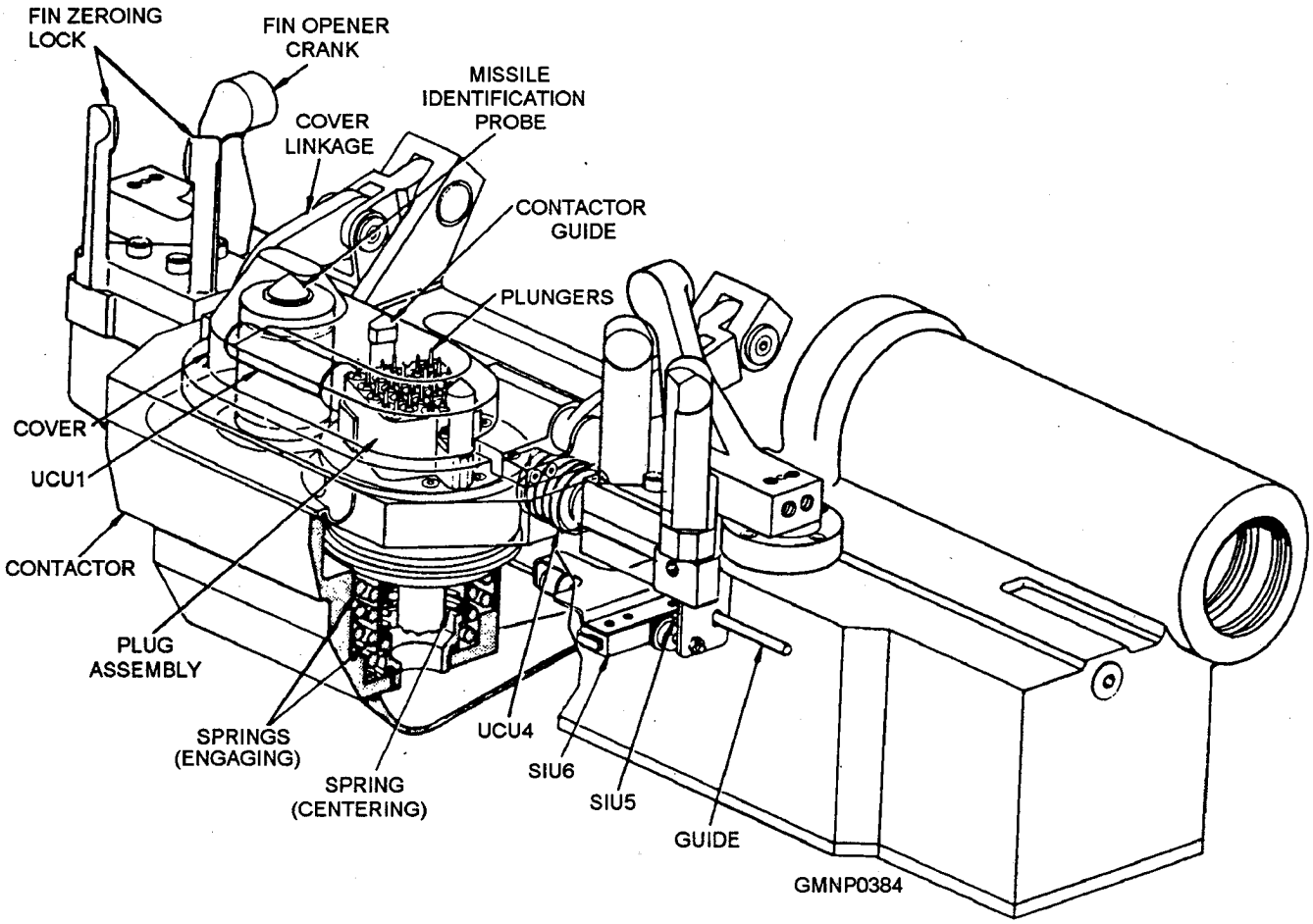

Figure 7-6.—Right-hand fin opener and contactor assembly.

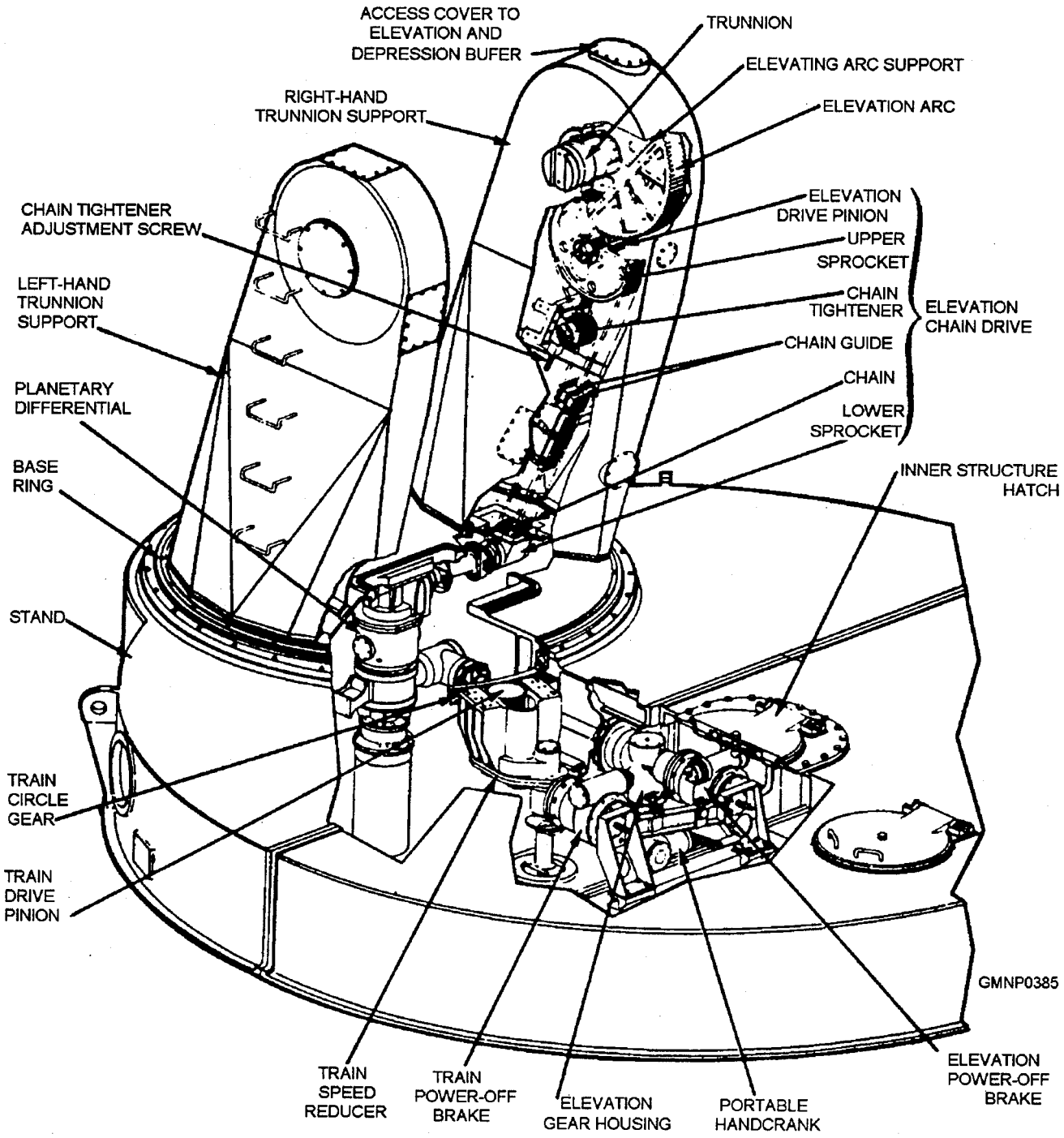

Figure 7-7.—Launcher carriage.

the launcher guide with electrical cables, hydraulic lines, and anti-icing lines. The main components of the carriage are a right-hand trunnion support, a left-hand trunnion support, and a base ring.

TRUNNION SUPPORTS.— The right-hand trunnion support is a weatherproof, 8-foot-high housing bolted over an opening in the base ring. The structure contains an opening in its base through which the elevation chain drive extends.

The trunnion is a drive shaft keyed to the yoke on one end and splined to the elevation arc on the other. This shaft transmits movements of the elevation arc to the launcher guide. The trunnion helps support the launcher guide and rotates on bearings mounted within an opening of the trunnion support.

The elevation chain drive is a chain and sprocket assembly that transmits the movements of a drive shaft in the base ring to the elevation arc. Four chains connect the lower sprocket to the upper sprocket. Each sprocket assembly has four wheels. The drive shaft in the base ring rotates the lower sprocket. The upper sprocket turns the elevation drive pinion that moves the elevation arc. The chain guide, near the lower sprocket, is a four-channel track that bears outward on the four chains to dampen their vibrations when operating. The chain tightener, near the upper sprocket, is also a four-wheel sprocket with an adjustment screw for establishing and maintaining the proper chain tension.

The left-hand trunnion support is physically similar to the right-hand structure. It holds the non-driven trunnion shaft and mainly serves to route cables and hoses up to the fixed rail and rotates with the base ring.

BASE RING.— The base ring is a circular, blastproof structure about 6 1/2 feet across and 17 inches high. It is designed to rotate within an off-center opening of the stand. The base ring also supports various components located inside the stand and trunnion supports.

Blast Door and Fixed Rail.— The blast door is a movable weldment that pivots up and aside to allow the transfer of a missile between the magazine and the launcher guide. With the door latched open, a spanning rail (about 4 1/2 inches long) on one side of the weldment aligns with a fixed rail on the base ring and the fixed rail on the guide arm. These rails provide the continuous tracks for the missile and the hoist. Also, when the door is open, a spud on the door aligns with the elevation positioner on the guide arm. The blast door drive is a hydraulic unit that opens and closes the blast door. One piston raises and lowers the door and another pivots the door sidewards through a 95-degree arc.

A small section of guide rail is attached to the structure of the base ring just below the blast door opening. It is called the fixed rail and rotates with the base ring. The fixed rail spans the distance between the top of the inner and outer retractable rails of the magazine and the spanning rail of the blast door.

Launcher Guide Power Unit.— The launcher guide power unit is an accumulator-type power supply that provides hydraulic fluid pressure to components in the launcher guide and the blast door. This power supply uses an electric motor to drive a rotary pump submerged in the main supply tank. A valve block regulates and filters the hydraulic fluid before charging three accumulators. Part of the structure of the base ring forms the supply tank for the launcher guide power unit.

Train and Elevation Mechanical Drives.— The train circle gear is mounted to and around the perimeter of the structure of the base ring. It is an external spur gear that meshes with the train drive pinion. Movement of the pinion rotates the base ring and launcher on the stand bearings.

Elevation drive components transmit the rotary motion of the elevation B-end motor to the chain drive mechanism in the right-hand trunnion support. A combination of shafts, couplings, and a planetary differential gearbox is in the base ring area.

Electrical Contact Ring.— The electrical contact ring (another term for a slip ring) is an electrical transfer device that allows continuous connections between the rotating base ring and the stationary magazine structure. The ring suspends from the bottom of the elevation planetary differential.

Train and Elevation Power Drives

The text will provide thorough coverage of the Mk 13 GMLS power drives in chapter 5. The Mk 13 GMLS power drives are mounted in the top inner structure of the magazine. (See fig. 7-4.)

MAGAZINE

The Mk 13 GMLS magazine (fig. 7-8) stows the missiles, transfers them up to or down from the launcher, and serves as a mounting pedestal for the launcher. The magazine may be divided into four main structural areas that contain the various major equipment assemblies.

Stand

The stand (shown in figure 7-8) is a stationary, round structure about 3 feet high. It forms the entire top part of the magazine structure. Besides the off-center base ring opening, the stand has four blowout plates equally spaced around its circumference. Two personnel hatches lead to the inner structure and the RSR areas.

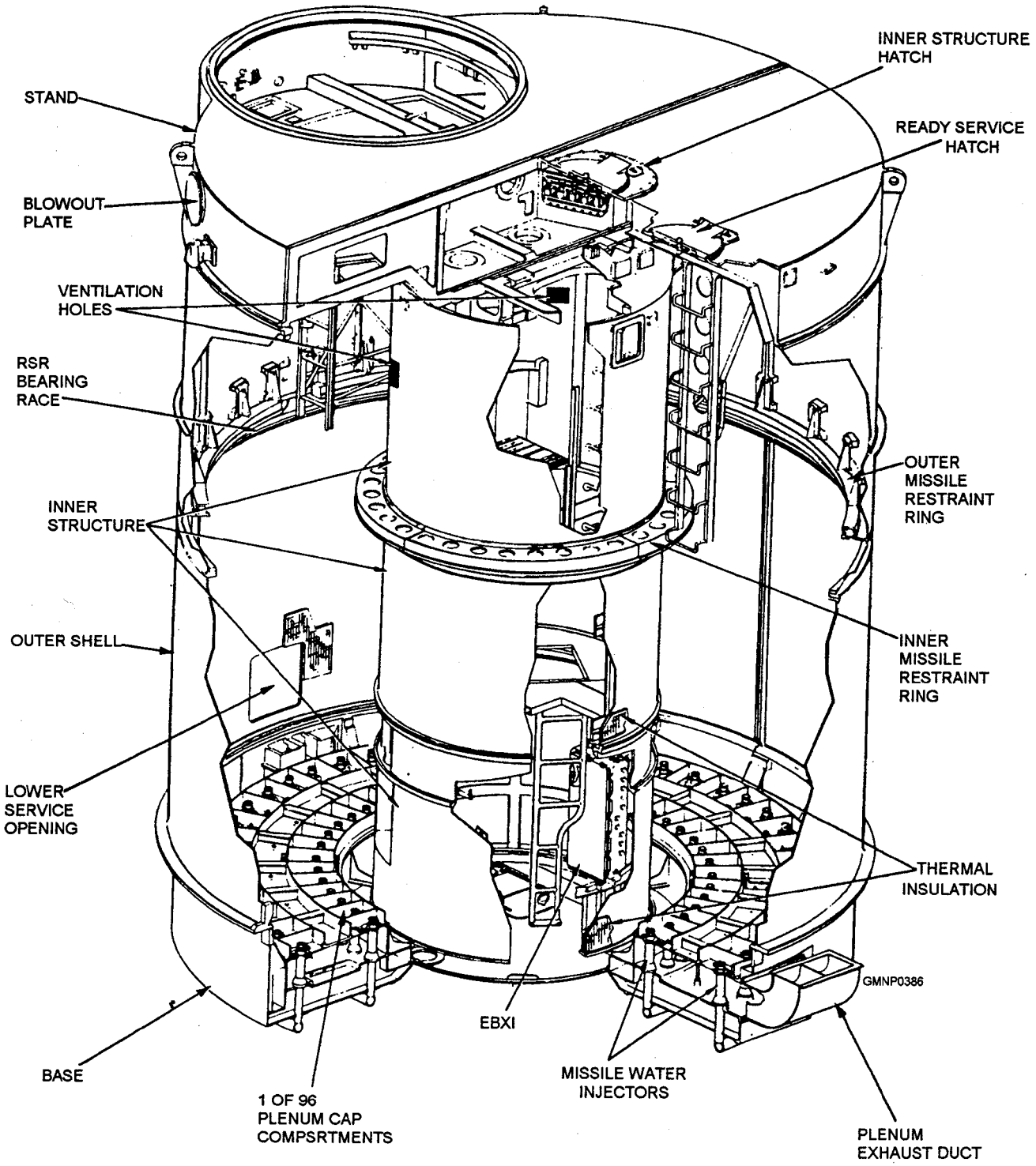

Figure 7.8.—Magazine structure.

Outer Shell

The armor-plated outer shell is the structure between the stand and the base. Service openings are located near the bottom and halfway up the shell. They provide access to the warmup contractors and RSR components, respectively. A bearing race for the RSR rollers is attached to the upper section of the shell. A four-segment missile restraint ring is directly above the bearing race. If a missile accidentally ignites in the magazine, the restraint ring holds it in place.

Inner Structure

The inner structure (fig. 7-9) of the magazine is in the center of the outer shell. It is made up of three sections: top, middle, and bottom.

The top inner structure is essentially a cylindrical shell with several mounting pads. The magazine hydraulic power supply main tank and the train and elevation hydraulic power drive main tank are integral parts of the top section. This section also contains a missile restraint ring similar to the one in the outer shell.

The middle inner structure has openings and components for the warmup electrical contact ring. The RSR radial bearings are in the rims at the top and bottom of this section.

The bottom inner structure, the shortest of the three sections, has five rectangular openings. Three of the openings have covers that provide access to a ring gear, warmup contractors, and a hoist track. The other two openings are for the RSR drive pinion and drive housing.

Base

The magazine base (shown in fig. 7-8) is at the bottom of the magazine structure. Its main components are a base structure, a plenum cap, a flametight hatch, 96 blow-in plates, and 96 water injectors. The base adds lateral strength to the outer shell, contains all the magazine service connections, and houses the missile

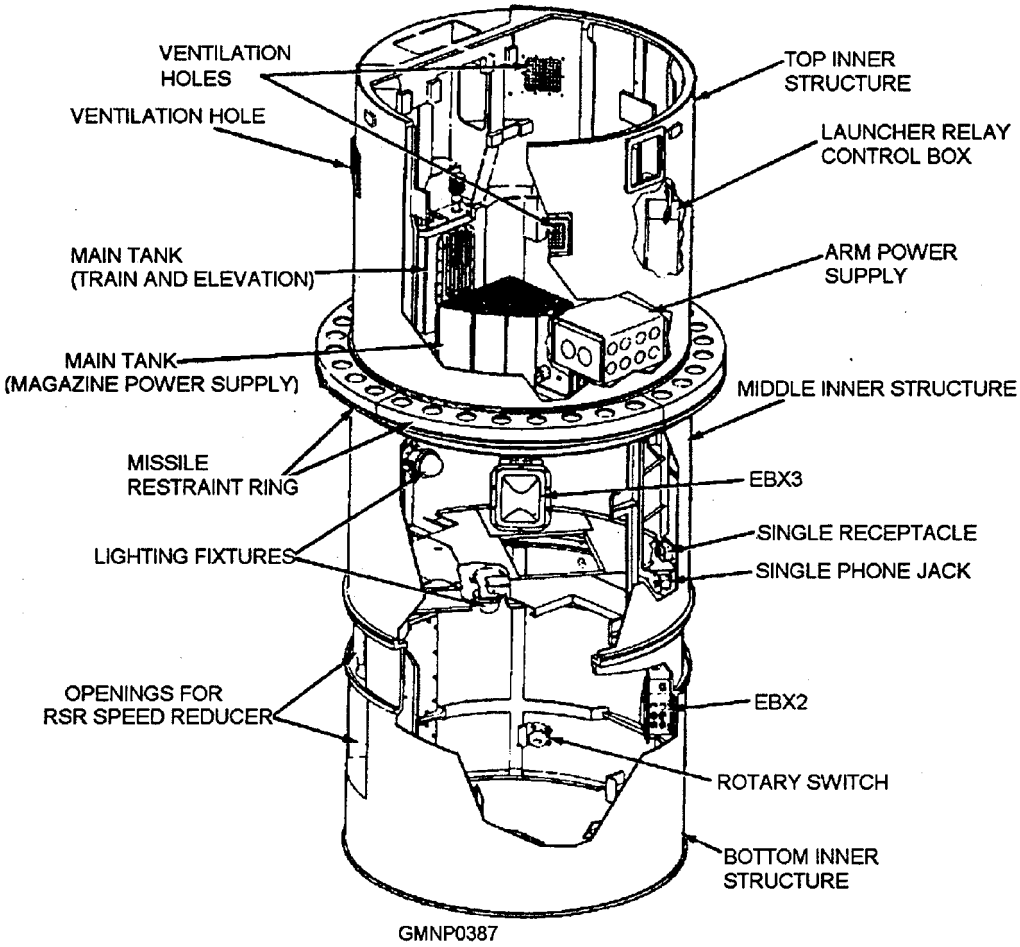

Figure 7-9.—Inner structure.

water injection system. If a missile ignites in the magazine, the plenum chamber receives the exhaust gases and conducts them to an elbow-shaped duct at the edge of the chamber. From here, the gases escape into the atmosphere.

The plenum cap contains a total of 96 compartments under the RSR cells. Under the 16 inner ring cells, there are 3 compartments for each cell (48). Under the 24 outer ring cells, there are 2 compartments for each cell (another 48). As a result, a compartment is always underneath each missile for any of the 32 possible RSR index positions. Each of the 96 compartments holds a blow-in plate assembly and a water injector nozzle.

Ready Service Ring (RSR)

The RSR (fig. 7-10) is a separate rotating structure inside the magazine between the inner structure and the outer shell. It indexes the cells clockwise or counterclockwise to deliver selected missiles to the inner or outer hoist positions. A station-at-hoist interlock switch produces a lamp indication on the EP2 panel, informing the operator which cell is at the selected hoist position.

A hydraulic B-end motor inside the inner structure drives the RSR. A speed reducer, consisting of a series of gear trains enclosed in a housing, connects the B-end output shaft to a speed reducer drive pinion. The pinion meshes with the RSR circle (ring) gear. Two radial

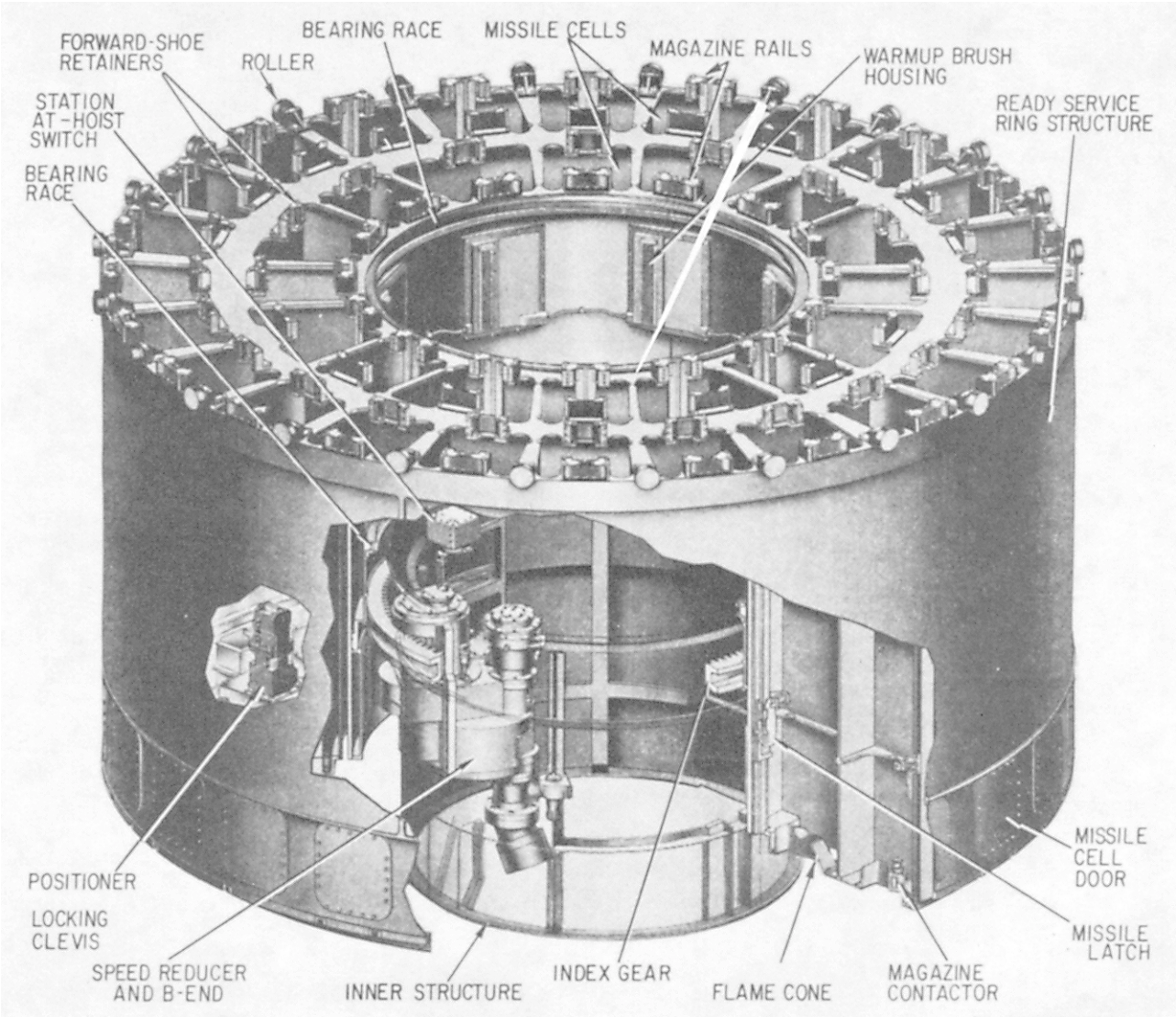

Figure 7-10.—Ready service ring.

bearings support the RSR laterally on the inner structure. Twenty-four roller assemblies fastened to the upper RSR rim between each cell support the RSR vertically. These rollers ride on a roller path mounted on the outer shell. A positioner (or latch) under the RSR locks the structure in any one of 32 index positions. The positioner blade engages locking clevises along the lower circumference of the RSR.

A magazine contactor is at the bottom of each cell. As a missile lowers into a cell, a male-type connector plug in the contactor enters a female-type receptacle in the base of the missile. That establishes system-to-missile connection. Through this device, missile cell identification circuits are possible.

Each cell has one full-length magazine rail that guides and supports the missile and hoist chain. A

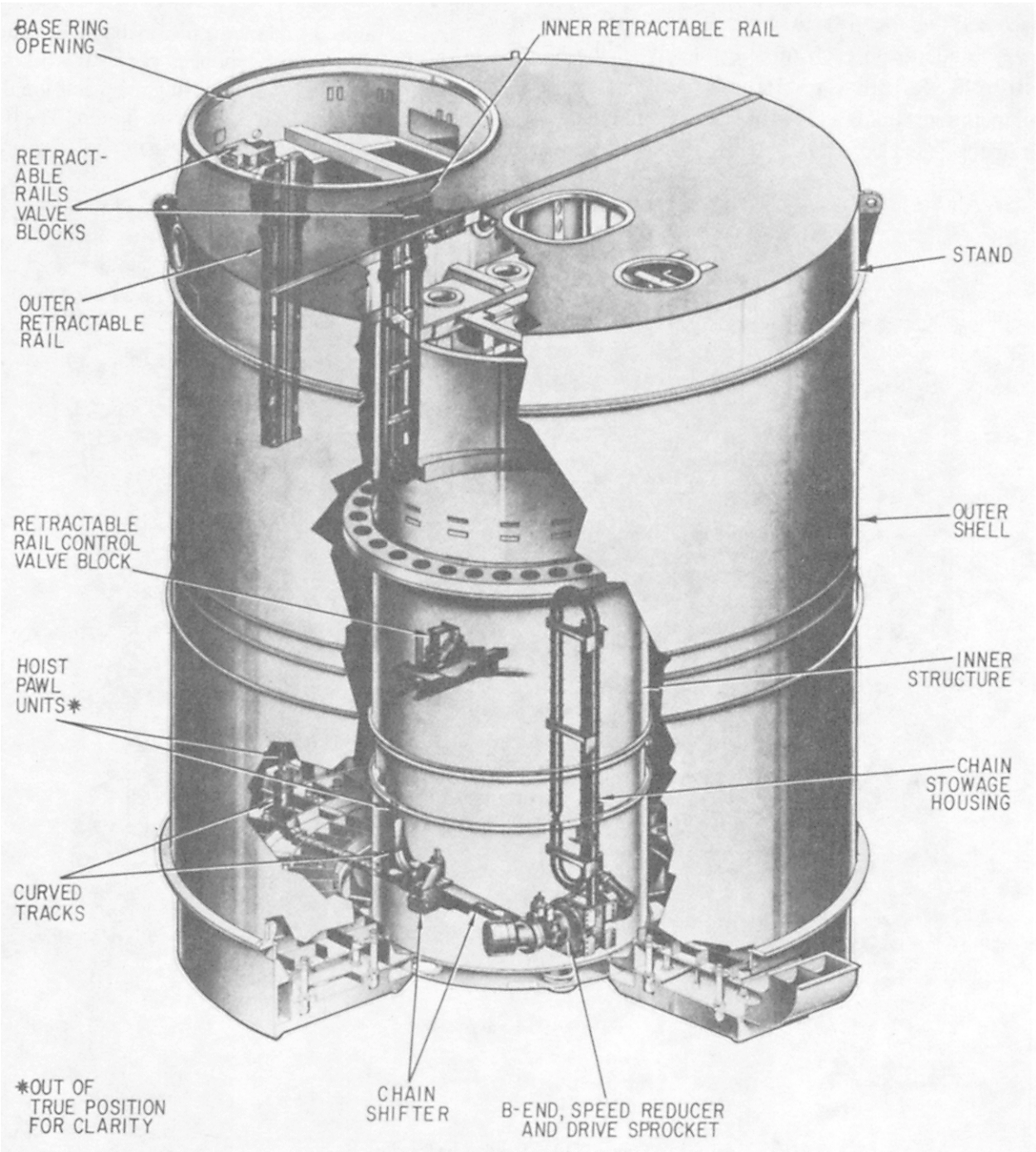

Figure 7-11.—Magazine hoist.

missile latch near the bottom of the rail locks the aft shoe of the missile in the cell. On the opposite wall of each cell is a forward-shoe retainer. It engages one of the forward shoes to help steady the missile in the cell. Also, at the bottom of each cell is a flame cone. The cone directs the flame of an ignited missile into the plenum chamber. Access to each cell is through individual doors along the lower inner and outer walls of the RSR.

Hoist Assembly

The components of the hoist assembly (fig. 7-11) perform all vertical transferring of the missiles. The hoist chain (fig. 7-12) is an open-end roller and link-type chain with cam-type projections and detentes on some specific links. They actuate interlock switches and valves, couple with the shifter half-links on the hoist pawl units, and act as travel limit-stops.

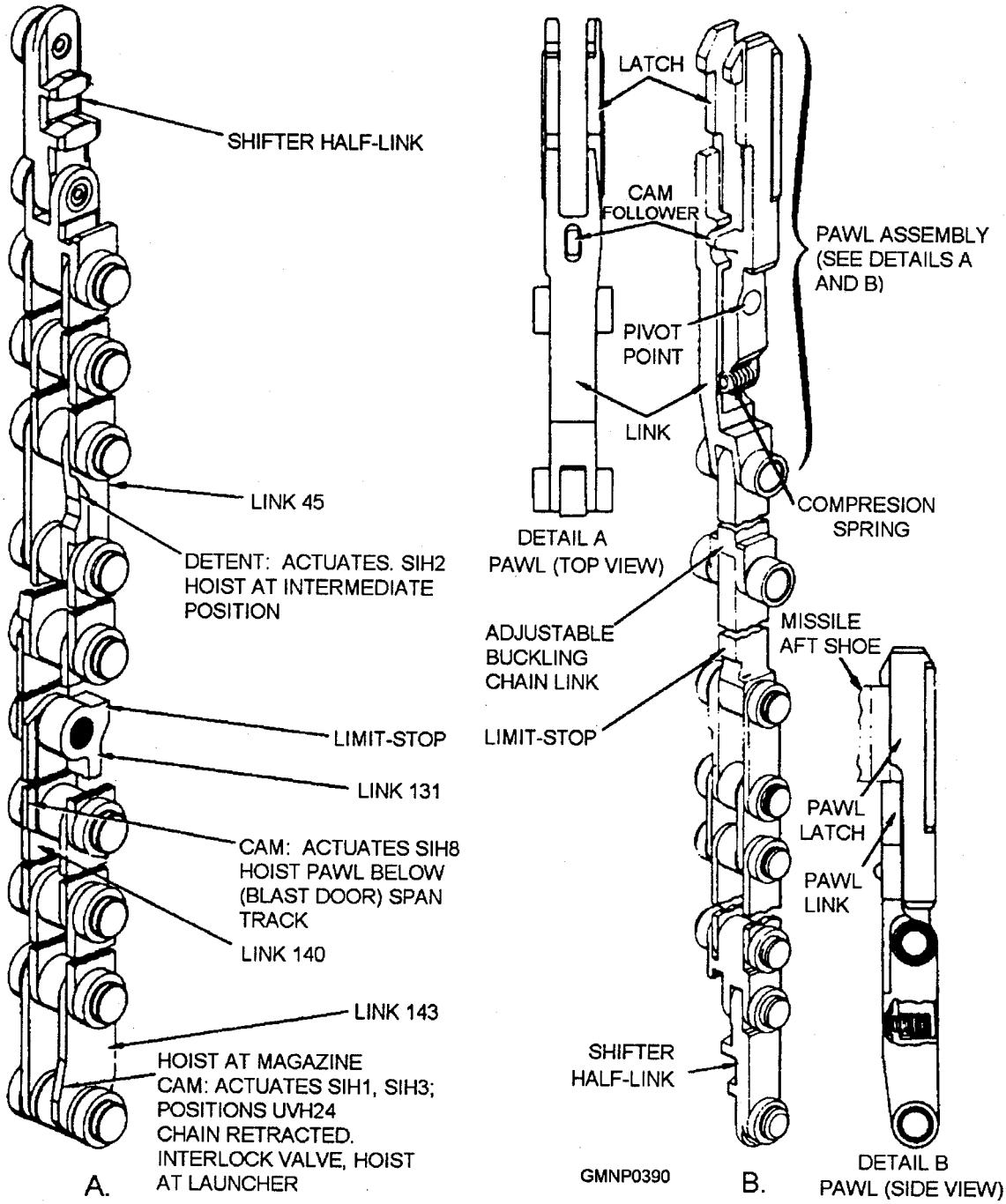

Figure 7-12.—Hoist chain component A. Hoist chain; B. Outer hoist pawl.

The chain stowage housing, mounted in the inner structure, stows a majority of the length of the chain when it is retracted. A small section of chain remains exposed on the drive sprocket and in the chain shifter. The hoist B-end hydraulic motor connects to a speed reducer and drive sprocket that drives the chain.

The hoist chain shifter is a hydraulically operated device located between the drive mechanism and the curved tracks. It raises or lowers the hoist chain's shifter half-link into alignment with either the inner or the outer hoist pawl unit's shifter half-link (see fig. 7-12). Two curved track assemblies, one for the inner ring and one for the outer ring, serve to guide the hoist chain and connected pawl unit. They pivot out and up to the magazine rail of the cell at the selected hoist position, Additionally, the hoist pawl units are stored in their respective curved track sections when the hoist chain is fully retracted at the magazine position.

A hoist pawl unit is extended to engage the aft missile shoe to load a missile. As the hoist pawl reaches the intermediate position (the point where the aft shoe of the missile rests), a cam follower forces the pawl latch to pivot sufficiently away from the pawl link to clear the aft shoe. At the same time, other surfaces on the hoist pawl are unlocking and caroming the cell latch open. The pawl link contacts the bottom of the shoe. A compression spring returns the pawl latch to its normal position, closing over the top of the shoe. The missile is then raised to the guide rail of the launcher. There the aft-motion latch mechanism extends and pivots the pawl latch to release it from the aft shoe. The missile is now secured to the launcher rail and the chain retracts to the magazine.

Associated with the hoist assembly are the inner and outer retractable rails of the magazine. (See fig. 7-11.) When either rail extends, it forms a continuous track between the magazine rail of the station at the hoist position and the fixed rail mounted on the carriage base ring. With both retractable rails retracted, clearance is provided betweenthe missile heads and the RSR during RSR rotation. Only one retractable rail may extend at a time.

Magazine Hydraulic Power Supply

The magazine power supply furnishes hydraulic pressure to operate components of the RSR/hoist power drive (refer to fig. 7-2) and other units in the magazine (that is, retractable rails, RSR positioner, and chain

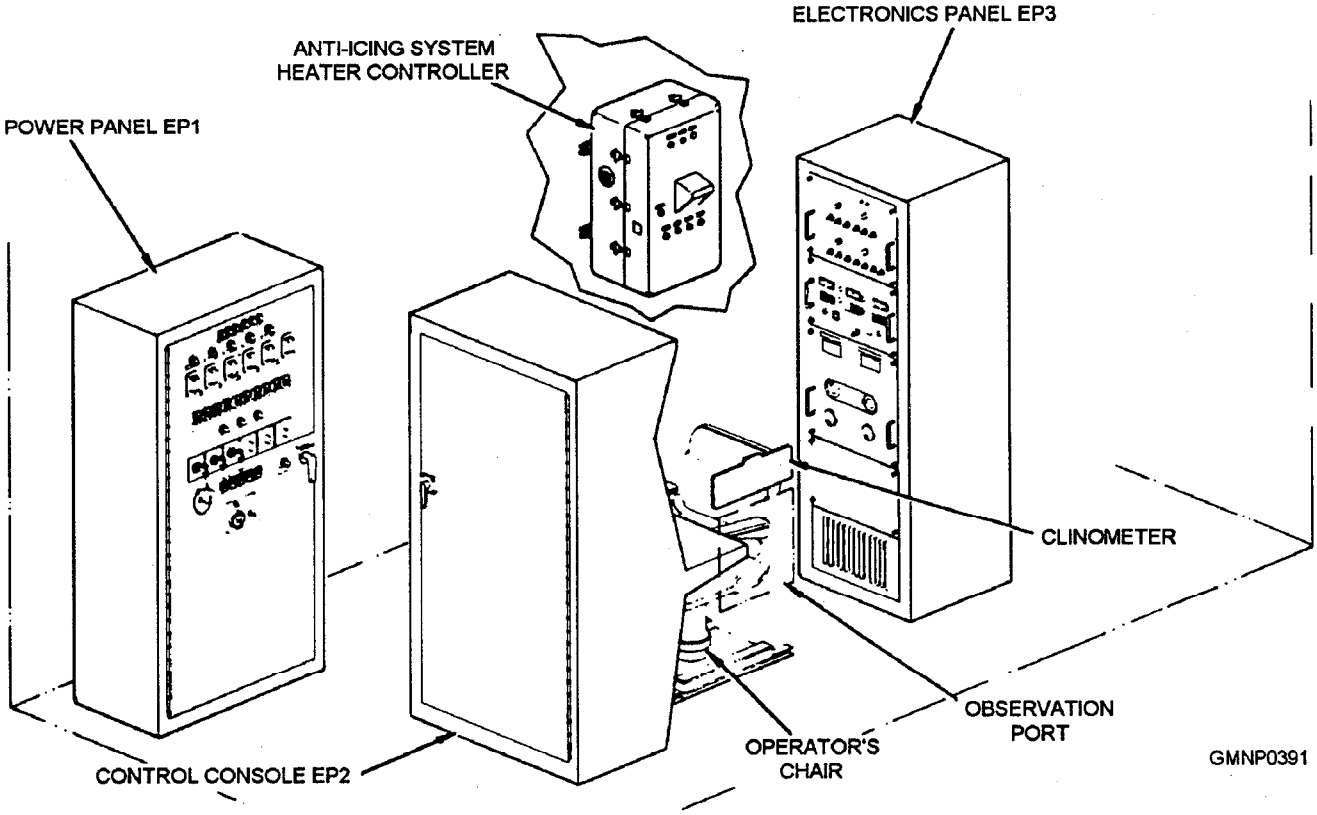

Figure 7-13.—Launcher control station.

shifter). The power drive consists of an electric motor that drives a hydraulic A-end pump. The pump provides hydraulic fluid pressure to either the RSR B-end or the hoist B-end. A hydraulic control valve shifts or redirects the output of the A-end to the selected motor.

It is not unusual to see this type of arrangement (one pump or A-end capable of driving two individual motors or B-ends) in ordnance systems. In the Mk 13 GMLS, the RSR cannot index while the hoist is cycling (and vice versa). This type of power drive is very practical in design and results in a smaller, more compact unit.

Harpoon Warmup

A Harpoon missile does not require warmup in the magazine, but does require about 10 seconds' warmup on the guide arm. Harpoon warmup power is applied through the fin opener arm (23-pin) contactor.

LAUNCHING SYSTEM CONTROL

The launching system control is the control, power distribution, and test center for the GMLS. The main components are the EP1, EP2, and EP3 panels located within the launcher control station (fig. 7-13). Other components in or near the launcher control station are the power transfer device (PTD), an inter-communication unit, a strikedown hand control, a clinometer, a safety observer switch, jacks, and receptacles. The strikedown and safety switch receptacle and a telephone jack are mounted outside the control station.

Power Panel, EP1

The EP1 panel (fig. 7-14) is the power distribution unit for the launching system. This panel contains 115- and 440-VAC power indicators, circuit breaker on/off switches, fuses, elapsed time indicators, ground detection indicator, and system safety and power supply switches. The system safety and power supply switches

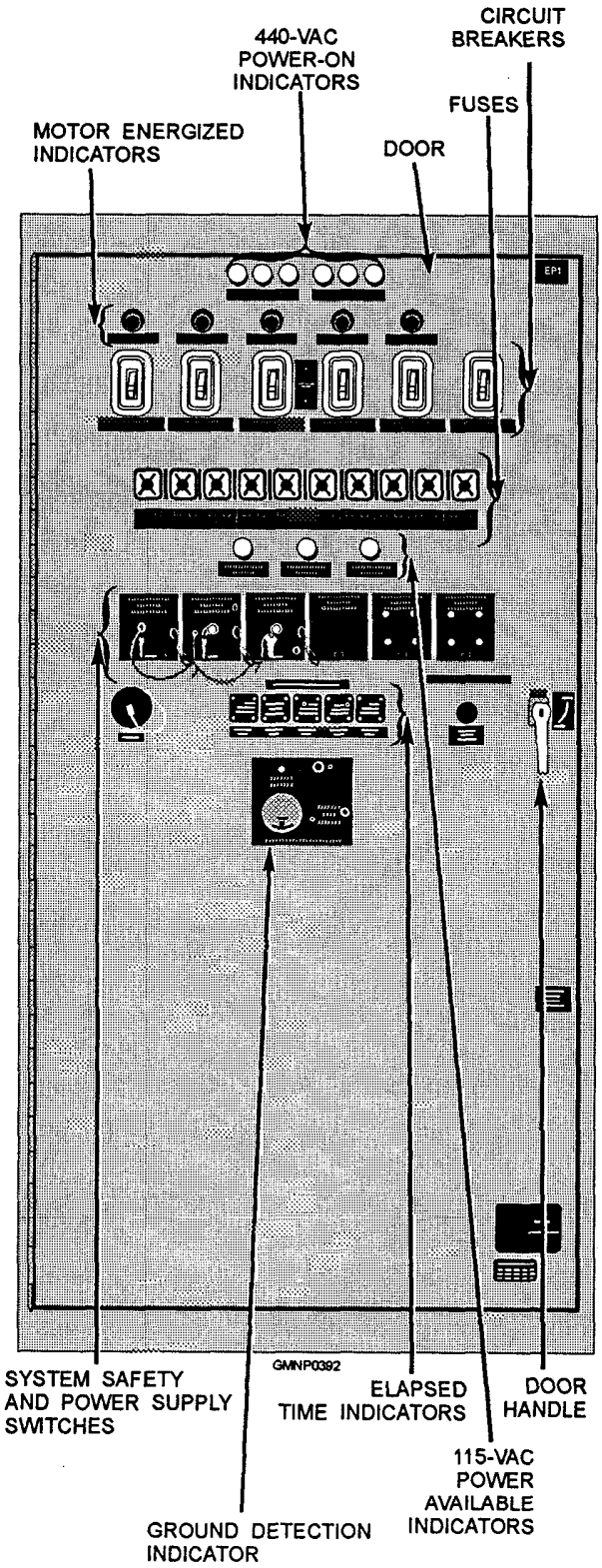

Figure 7-14.—Power panel, EP1.

are a two-position rotary keylock switch that controls the system motors. In the SAFE position, the switch opens the start/run circuit of the motor. The key may be removed (and retained) by system personnel. This is a safety feature that prevents system operation when personnel are working around rotating machinery. A solenoid-operated latch locks the door when power is available to the panel.

Control Console, EP2

The EP2 control console (fig. 7-15) is the control unit for the GMLS. It contains the operating controls

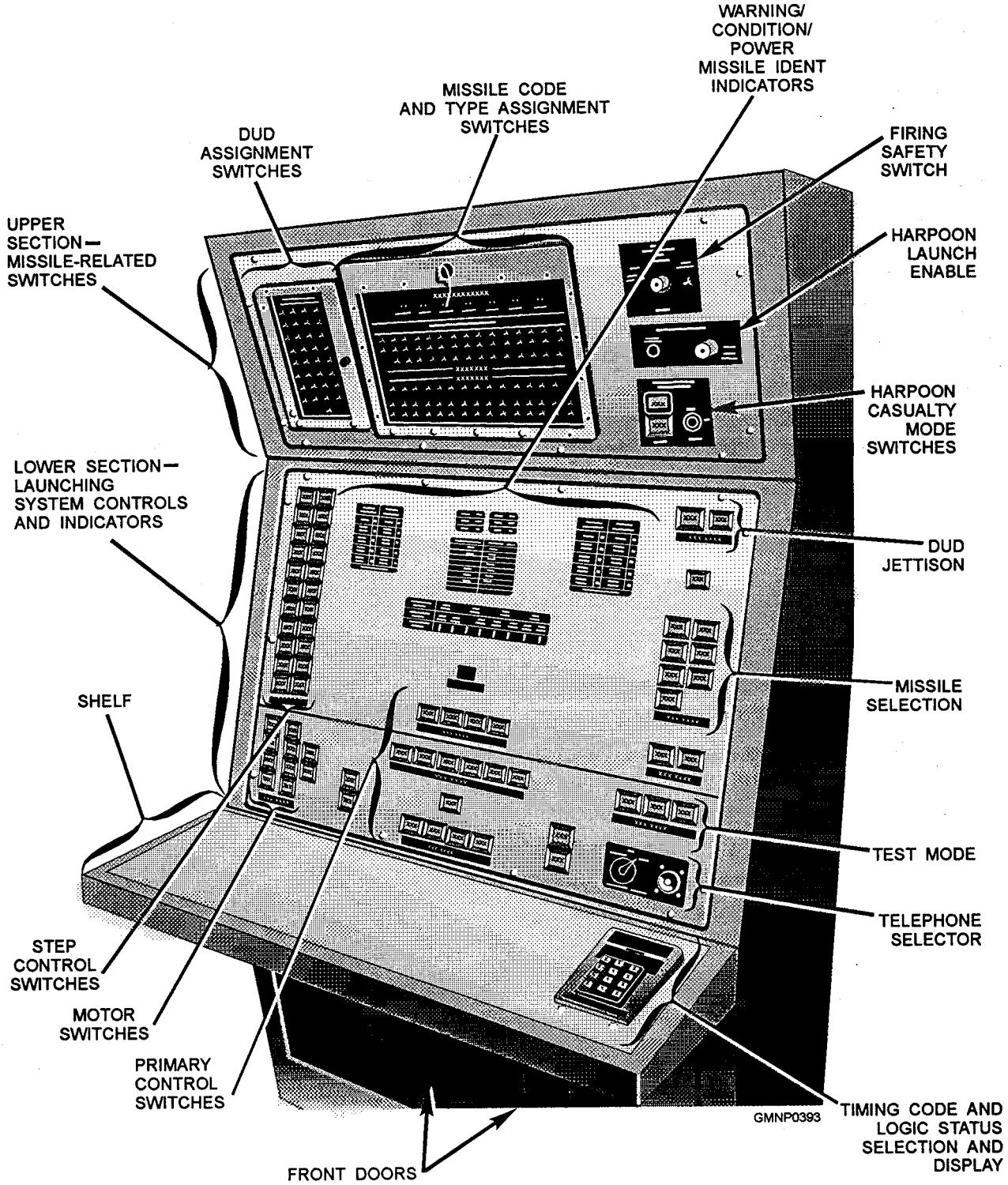

Figure 7-15.—Control console, EP2.

and indicators on two angular sections on the upper part of the console. These controls and indicators allow the operator to select and monitor GMLS operation.

UPPER SECTION.— The upper section contains missile-related switches. The 40 dud assignment switches designate which RSR stations contain dud or normal missiles. Missile code and type assignment switches are thumbwheel switches that assign a designated missile numerical code to type A through type G missiles and T for the GMTR stowed on the RSR in the magazine. Also, rows of indicating lamps light up to display the load status of each station (cell) and identify which station is at the HOIST position.

The Harpoon casualty mode and firing safety switches are connected in the normal and emergency firing circuits. The firing safety switch is another rotary key-type switch. The key is removed in the SAFE position to inhibit the rocket motor firing circuit.

LOWER SECTION.— The lower section of the EP2 contains the launching system controls and indicators. The controls are push-button indicator switches used to activate and select the mode of control and type of GMLS operation. For normal auto/remote control operation, three primary control switch groups at the center of EP2 start the GMLS load-and-fire operation. The remote launcher control or local launcher control push button selects who has control over loading operations. If remote launcher control is selected, FCS controls loading and, if applicable, remote motor starting. In local launcher control, the EP2 operator has control of the system.

The other switches are used with the primary switch groups for motor activation, step, exercise, and test modes of system operation. The indicator lamp groups provide the console operator with information related to the launching system and missile status.

A timing code and logic status (TCLS) selection and display module is on the right side of the shelf. This module is used to troubleshoot and test GMLS operations. Physically, it is very similar to a pocket calculator in size and construction.

Push buttons on the TCLS let the operator enter numerical codes for obtaining information on equipment electrical status and for timing component operations. Light-emitting diode (LED) indicators display timing and circuit status according to the codes (numbers) punched (entered).

INTERNAL COMPONENTS.— Access to components inside the EP2 console is through a large door on the back or two small doors on the front. The components accessible through the back door are the printed circuit (PC) cards on the wire-wrap backplane, fuses, manual handcrank solenoid controls, receptacles with polarizing key positions, electronic component circuit cards, terminal boards, and other miscellaneous components. All components in EP2 are identified by an electrical designation stamped (or applied) on or near each component.

Accessible through the two front doors are rectifiers, low dc voltage power supplies, a rechargeable nickel-cadmium battery, a battery charger, and a fan for component cooling.

The rechargeable battery provides dc power to launching system solenoids under two conditions. If a power failure occurs in the 115-VAC power distribution network during an operational cycle (that is, raising the hoist), the dc battery supply will activate automatically. The battery will provide a dc output for about 5 seconds and permit completion of the interrupted cycle. The second condition is used during maintenance or troubleshooting procedures in a normal power-off condition. System personnel activate the manual handcrank solenoids control and position a selected toggle switch. This actuates a particular solenoid and permits handcrank or handpump operation of a component (that is, extend or retract the launcher retractable rail).

Electronics Panel, EP3

The EP3 electronics panel contains the electronic control and test equipment for launcher train and elevation power drives. The front of the EP3 panel

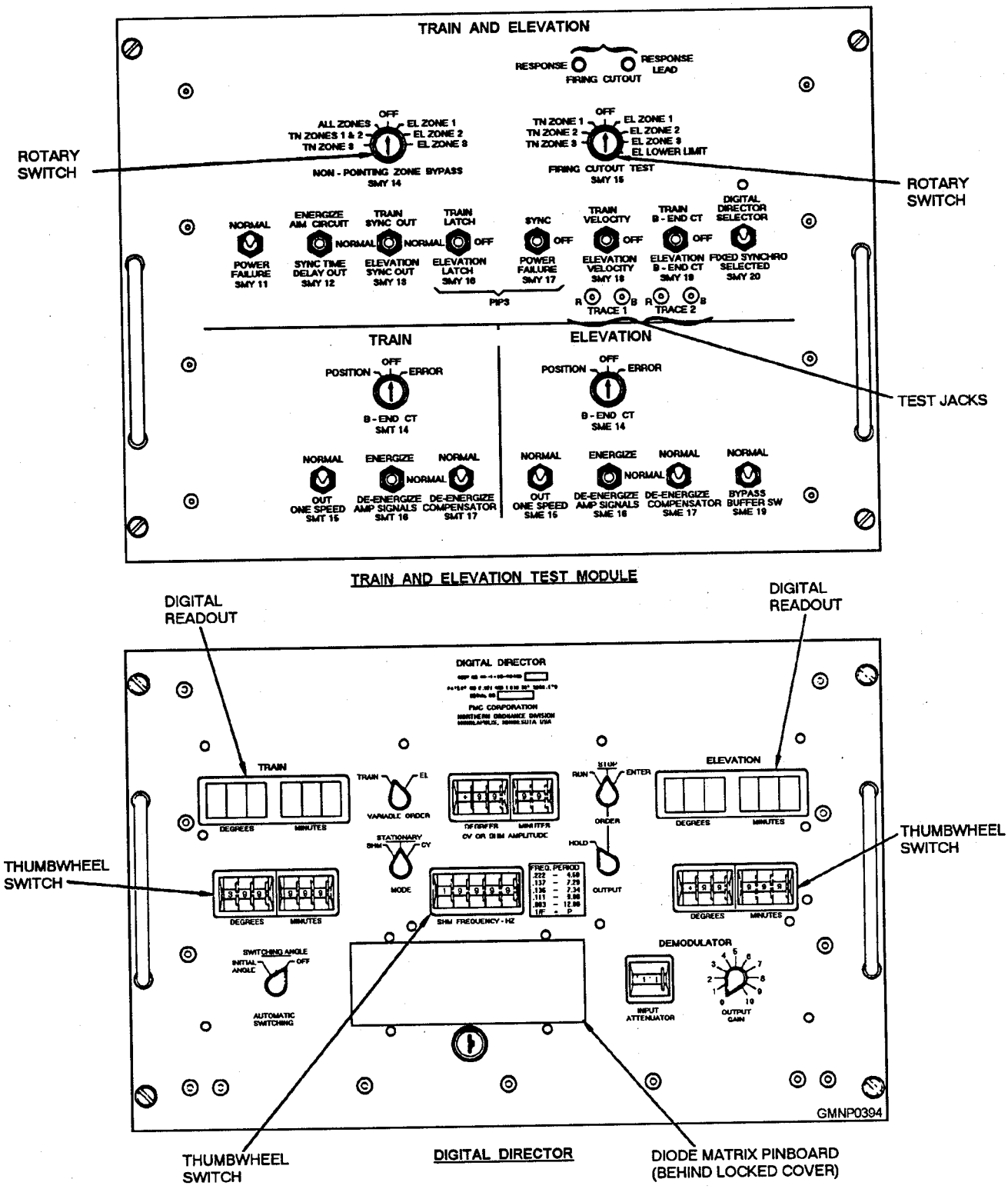

Figure 7-16.—Electronics panel, EP3 (sheet 1 of 2).

(fig. 7-16) contains the train and elevation test module and the digital director (DD), the local control handwheel module (LCHM), and the electronic servo control unit (ESCU).

The LCHM (fig. 7-16, sheet 2 of 2) generates train and elevation local control position order signals to point the launcher. Digital readouts on the LCHM show launcher train and elevation positions. Response signals from synchros in the train and elevation power drive receiver-regulators operate the digital readouts on the LCHM. The LCHM is the primary local control unit for the launcher and comes on-line automatically when local pointing is selected. During a HARPOON casualty mode, the LCHM is required to point the launcher.

The test module is used to test train and elevation nonpointing zones, nonfiring zones, and synchronization of the power drives. It contains switches and jacks to select the tests and record traces.

The DD is used to operate the train and elevation power drives in local control. It is also used with the test module and the electronic servo control unit (ESCU) to check and test power drive operation. The DD has rotary and thumbwheel switches to control the power drives. Digital readouts indicate DD output in degrees and minutes for train and elevation. A diode matrix pinboard, behind a locked cover, generates the stationary position orders for load, strikedown, and jettison operations.

The ESCU is located in the rear of EP3 and is the servo amplifier for the train and elevation power drives. The unit consists of a solid-state amplifier with 13 PC cards on the upper half and amplifier controls and test jacks on the lower half.

MK 26 GMLS AND MODS

LEARNING OBJECTIVES: Explain the purpose/function of the Mk 26 GMLS major components with Mod differences.

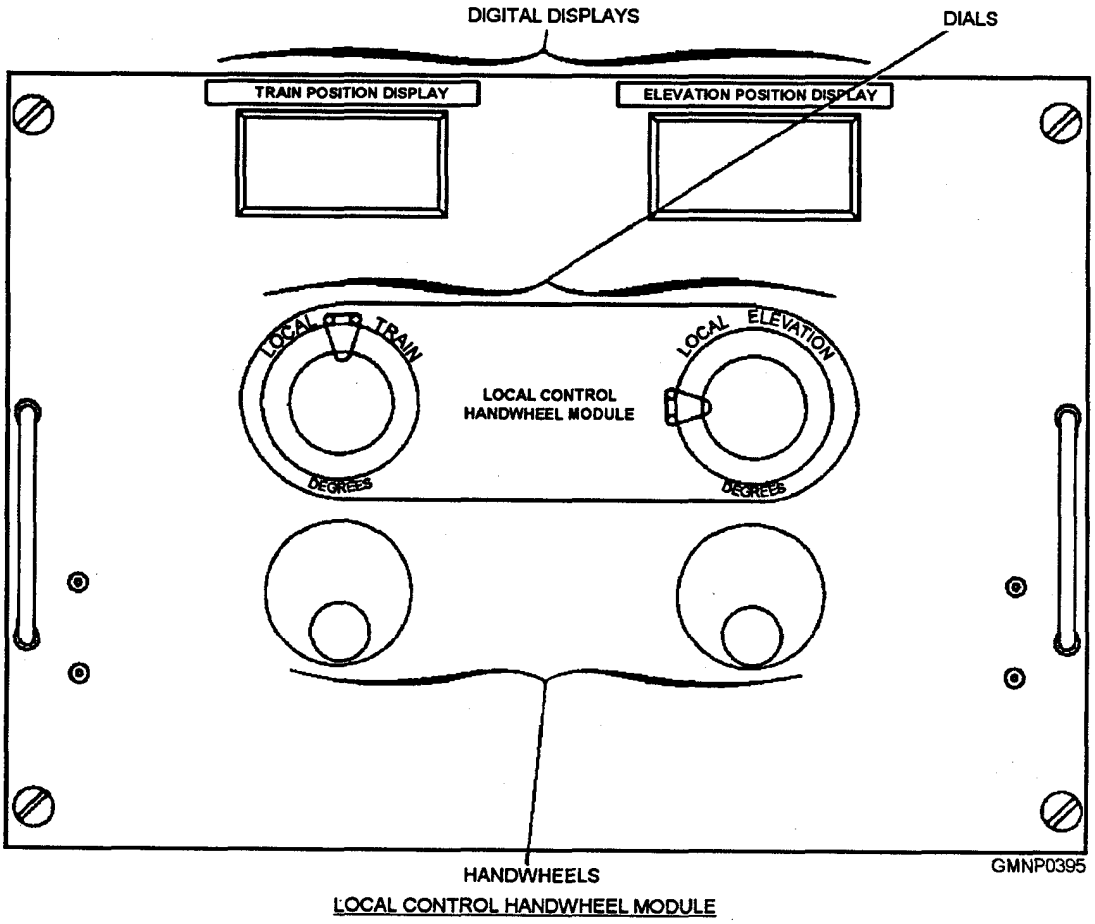

Figure 7-16.—Electronics panel, EP3 (sheet 2 of 2).

The Mk 26 Mods 0 through 5 GMLSs (fig. 7-17) have been designed to be an extremely versatile and sophisticated addition to the missile community. They are installed aboard the DD-993 *Kidd-*, *CGN-38 Virginia-*, and *CG-47 Tilconderoga-* class ships. This GMLS possesses one of the quickest reacting and fastest firing rates of any comparable dual-arm system.

Constructed with advanced solid-state electronic, hydraulic, and mechanical features, the Mk 26 GMLS is compatible with a variety of fire control systems (Standard, ASROC, and AEGIS). The system also handles a mixed arsenal of missiles including Standard SM-1, SM-1A, and SM-2 rounds and the ASROC (both torpedo and depth charge configurations).

PURPOSE AND CAPABILITIES

As a major subsystem of the ship's combat system, the Mk 26 GMLS consists of a launcher, a magazine,

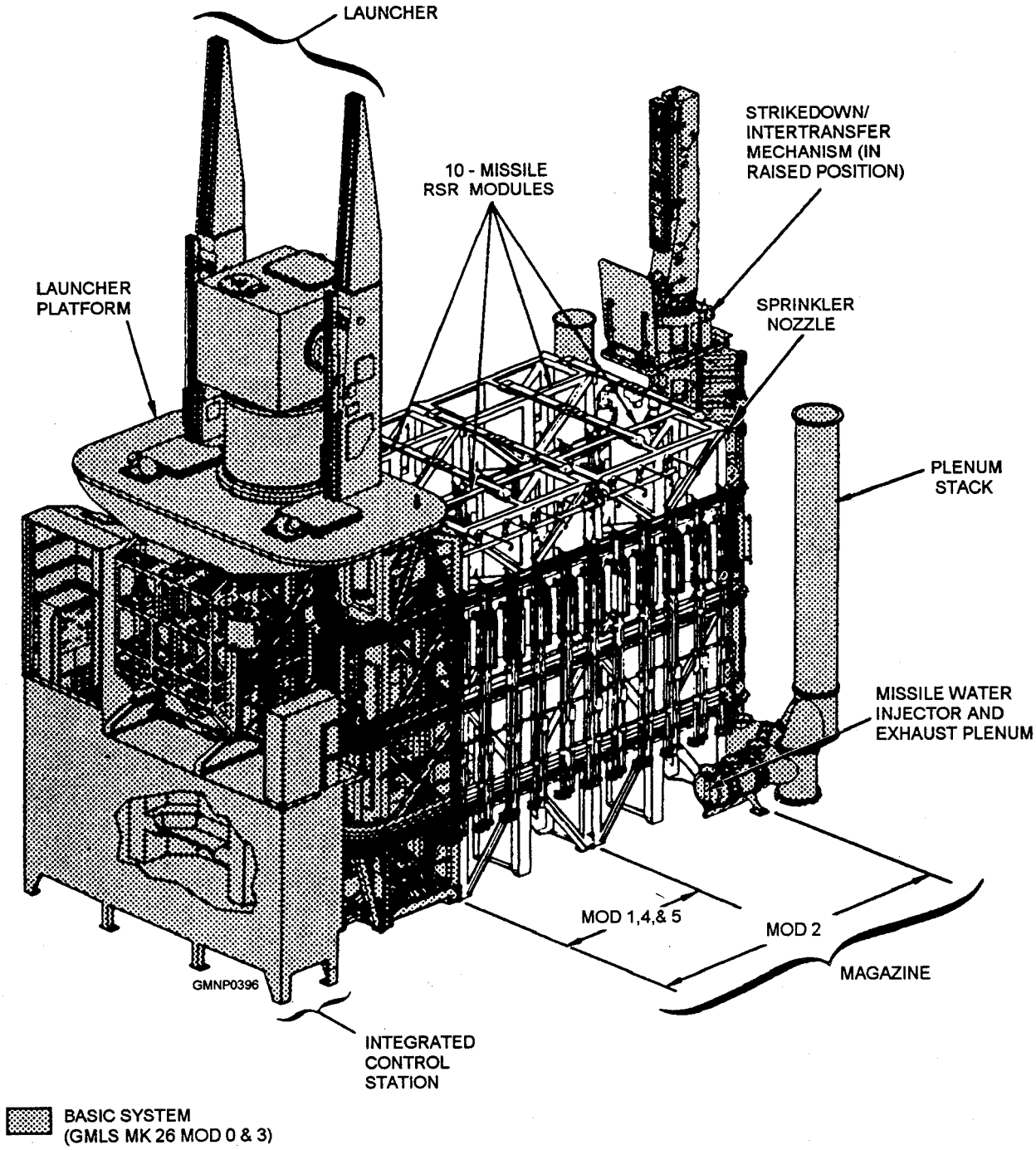

Figure 7-17.—Mk 26 GMLS with Mod differences.

and a launching system control. Depending on the Mod configuration of the system, 24 to 64 missiles are stowed vertically on the two rotating RSRs of the magazine. In response to remote or local commands, the system auto- or step-loads one or two missiles to the launcher. A firing rate of two missiles approximately every 9 seconds (with a 1-second salvo time delay) can be maintained.

The launcher is capable of unlimited train and may be elevated or depressed through an arc of 100°. The elevation load position is about 90°, with one train load position of 0° or 180° for forward- and aft-mounted launchers, respectively. The launcher must be within 20 minutes either side of the remote signal position to be synchronized with an FCS pointing order.

The launcher performs all missile preflight preparations like other GMLSs except for unfolding the missile fins. That action is accomplished in the magazine. Additionally, an adapter rail for the ASROC missile is not required on the Mk 26 GMLS.

The RSRs independently index the nearest selected missile(s) to the hoist position at one end of the magazine. When the RSR indexes a missile to the other end of the magazine, it aligns with the strikedown/ intertransfer mechanism. System on-load, off-load, and intertransfer (from one RSR to the other) operations are performed here.

The launching system control (fig. 7-18) is the brain of the launching system. Its electrical/electronic

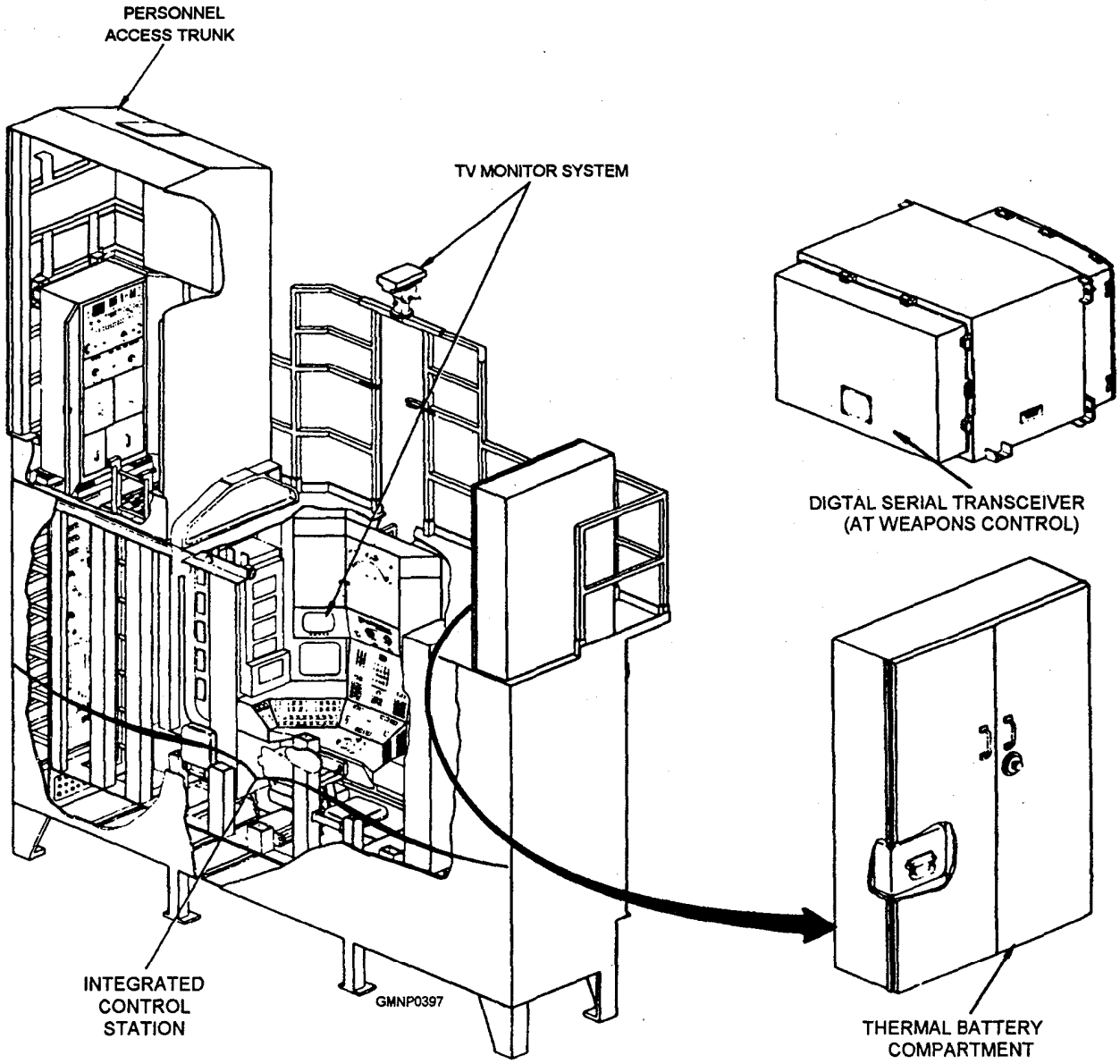

Figure 7-18.—Launching system control components.

equipment controls all launching system operations in reponse to ship computer signals. The integrated control station (ICS), located below the launcher in front of the two RSRs, is the major component of the launching system control. All the control panels and equipment necessary to activate the system, monitor its operations, initiate local orders, and transfer automatic control to weapons control are in this compartment. In addition, the ICS houses all the testing and cycle monitoring equipment needed for maintenance procedures.

The ICS operator can communicate directly with other shipboard command stations through a 20-station ship communication network as well as sound-powered telephone circuits. Also, the operator can watch the whole operation of the launching system. Two special high-strength windows in the front of the ICS let the operator see into the forward parts of the magazine. A closed-circuit television system with two remotely located cameras allows the ICS operator to monitor on-deck actions and parts of the magazine not visible through the windows during all system operations.

MOD AND SERIAL NUMBER DIFFERENCES

The Mk 26 GMLS is currently divided into six different Mods that differ mainly in missile-stowage capacities and "value engineering design changes." Refer to figure 7-17.

The magazine of the Mod 0, called the basic system, contains two RSRs that can stow 12 missiles each. By adding one lo-missile module to each RSR, the Mod 0 becomes a Mod 1; likewise, by adding two 10-missile modules to each RSR, the Mod 0 becomes a Mod 2. The Mod 0, then, can stow 24 missiles; the Mod 1, 44 missiles; and the Mod 2, 64 missiles. The first eight systems manufactured were assigned serial numbers 1 through 8 and are currently the Mods 0, 1, and 2 systems. They are primarily installed on the CGN-38 *Virginia* class.

Mk 26 systems with serial numbers 9 through 18 have incorporated valuable engineering design changes into various components of the launching, loading, strikedown/intertransfer, and control system. These design changes alter the physical characteristics of components and systems without affecting their functional characteristics. Generally, these minor design changes were made to reduce system cost and weight. They also improved system reliability, maintainability, and availability (RMA). These systems were originally built as Mod 0s and Mod 1s but, because of the number of changes made, are now designated Mod 3s (old Mod 0s) and Mod 4s (old Mod 1s). They are primarily installed on the DDG-993 *Kidd* class.

The Mk 26 Mod 5s are installed on the CG-47 *Ticonderoga*- class ships with the AEGIS weapons system. Additional design changes have been made to interface with the AEGIS equipments. The magazine capacity is the same as Mod 1 and 4 systems.

The magazine size of the different Mods also affects some auxiliary equipment. The amount of piping needed for the sprinkling and water injection systems grows with the magazine stowage capacity. The extra piping also needs more pressurized seawater. Ship air-conditioning demands differ among the various Mods.

The launcher is the same for all six Mods. Except for internal logic circuitry and some panel displays, the ICS for each Mod is the same. The strikedown/ intertransfer mechanism is unchanged. However, additional RSR modules do move the mechanism farther from the launcher.

PERSONNEL REQUIREMENTS

For normal tactical operation, four persons are required to run the system. The main control console (MCC) operator activates, readies, and monitors system functioning. A launching system captain is in charge of the ICS and supervises total system operation. Two other personnel are assigned as fin assemblers/folders and remain at-the-ready in the ICS. They also help observe magazine equipment operation through the two observation windows and visually verify that correct missiles are at the hoist positions.

The text will now provide a general physical description of the major component areas of the Mk 26 GMLS. We will use the Mod 0 configuration (the basic system) as our model, and only the A-side equipments will be covered. Be particularly alert to the terminology associated with the Mk 26 GMLS.

MAGAZINE

The magazine is a below deck, weathertight compartment for handling and stowing the missiles in an environmentally controlled condition. Its components perform all operations involved with loading, unloading, strikedown, and intertransfer.

Ready Service Ring (RSR)

A complete 12-missile RSR (fig. 7-19) is made by joining three basic support structures: a hoist end, a six-missile section, and a strikedown end (assembled in that order). The two end sections are structurally similar and provide space to mount three hanger rail assemblies apiece. The six-missile section is inserted between the end sections and is fastened to the magazine deck. It also supports the launcher platform above. It has space for three hanger rail assemblies along each side.

To increase magazine capacity, either one (Mods 1, 4, and 5) or two (Mod 2) 10-missile sections are added to a basic RSR. (See fig. 7-17.) Physically placed between a six-missile section and the strikedown end, a lo-missile section provides space for five hanger rail assemblies along each side.

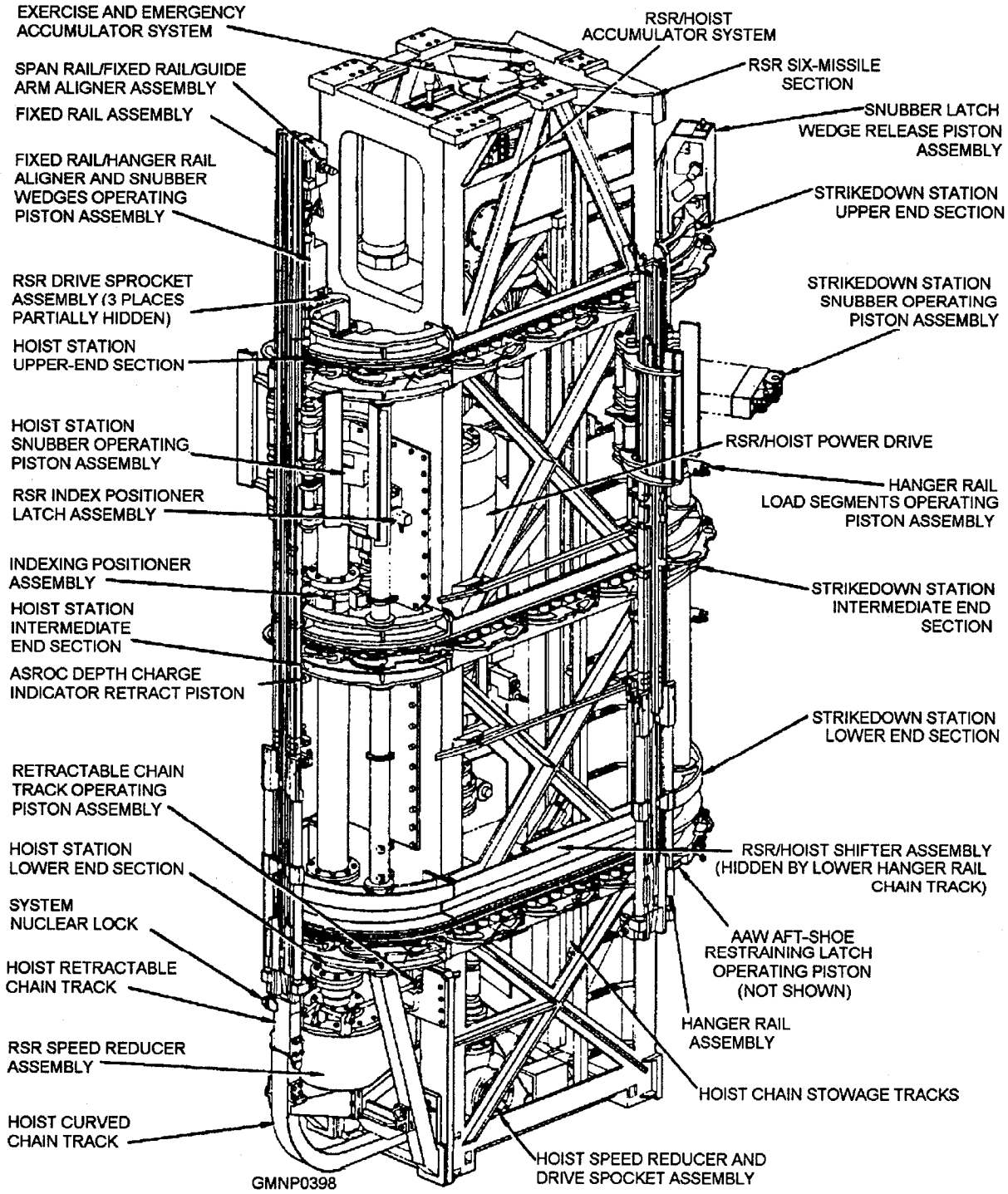

Figure 7-19.—RSR components, general arrangement.

Each basic section has three hanger rail chain tracks (upper, intermediate, and lower) that guide the hanger rail chains. A roller track, mounted just above the lower chain track, guides the hanger rail rollers. The hoist end also has six proximity switches gang-mounted near its bottom. As the hanger rails move past these switches, rail-mounted actuators activate them in various combinations. This action identifies to the control system individual hanger rails according to the number assigned them.

Hanger Rail Assemblies

A hanger rail assembly (fig. 7-20) is made up of a 13-foot structural rail column. The individual components of the hanger rail support and hold a missile on the RSR. Mounted on the back of each column are three chain sections with rail links. When joined to other hanger rails, three continuous chains are formed around the RSR. They secure the rails to the RSR and provide a means for indexing. A hanger rail roller supports the assembly vertically in the RSR roller track.

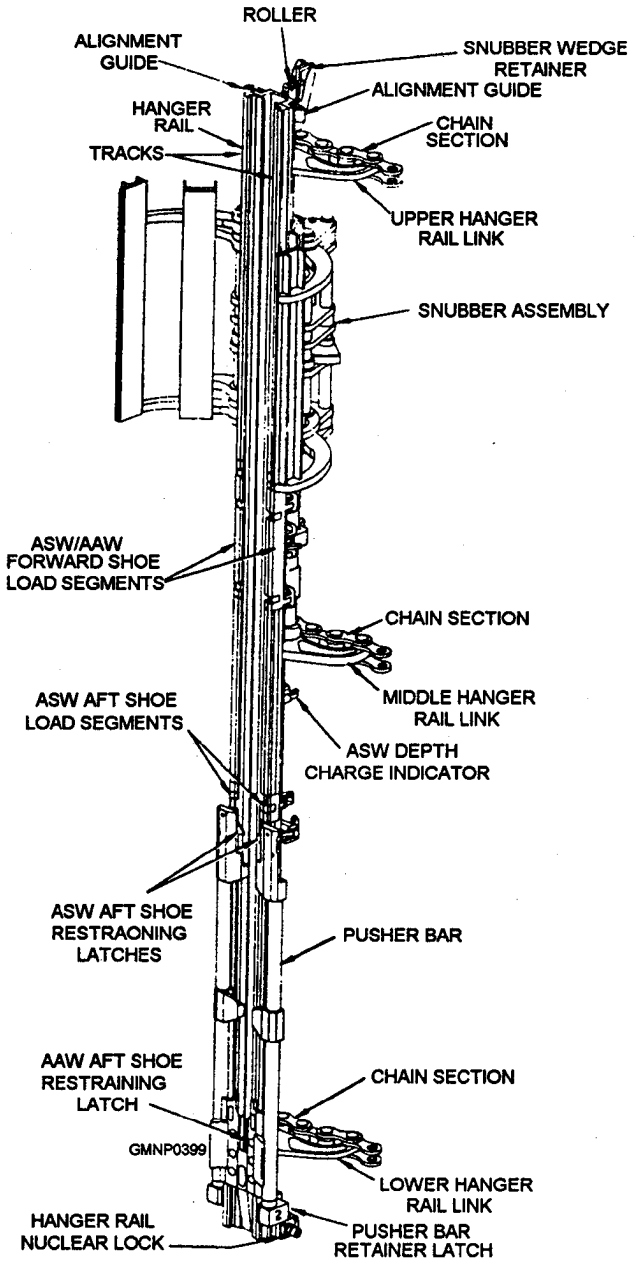

Figure 7-20.—Hanger rail assembly.

Rail tracks on the front of the column engage and guide the pusher bar, missile shoes, and hoist chain. During loading/unloading operations, the hanger rail at the HOIST position is locked to the RSR fixed rail above it.

SNUBBER ASSEMBLY.— A snubber assembly is mounted to the back of each hanger rail. It has padded arms which close on the missile to stabilize it in the RSR. A hydraulic piston and linkage arrangement at the hoist station and a similar mechanism at the strikedown station actuate the snubbers. The arms open to clear the way for all loading and unloading operations.

PUSHER BAR.— The hanger rail pusher bar is a device that rides in the rail tracks and holds the aft shoes of AAW and ASW missiles. There are three different latch groups associated with the pusher bar. A pusher bar retainer latch at the bottom of the hanger rail locks the bar at its fully lowered position. The latch is retracted by the hoist retractable chain track when it extends to align with a hanger rail at the HOIST position. The retainer latch is spring-loaded to the extended position and reengages the pusher bar when the hoist retractable chain track retracts.

An ASW aft shoe restraining latch is near the top of the pusher bar. An AAW aft shoe restraining latch is near the bottom of the pusher bar. Both latches are spring-loaded devices that close over their applicable aft missile shoe, locking it to the pusher bar. Functionally, during a hoisting operation, the hoist pawl engages the pusher bar and raises it to the launcher. There, guide arm components unlock the (AAW or ASW) shoe restraining latches and disengage the missile from the pusher bar. The hoist retracts, returning the empty pusher bar to the magazine.

LOAD SEGMENTS.— The hanger rail contains two different load segments. They are small, outer sections in the guide track. They pivot open to admit missile shoes to the hanger rail at the strikedown station (only). They close to hold the shoes in the rail at all other times. The upper segment receives the forward shoe of an AAW and an ASW missile. The lower segment receives only an ASW aft shoe. (The AAW aft

shoe enters a loading slot cut in the bottom of the hanger rail near the AAW aft shoe restraining latch.) When a hanger rail is indexed to the strikedown station, the load segments align with a hydraulic piston assembly. Through linkage, the load segments are made to open and close as the piston extends and retracts.

HANGER RAIL NUCLEAR LOCK.— Each hanger rail mounts a hanger rail nuclear lock (referred to as a rail lock). This key-operated device functions in conjunction with a system nuclear lock to permit or prevent the hoisting of a missile from that particular rail. The rail lock is locked (or extended) whenever a nuclear missile is initially onloaded into that rail. For conventional missiles, it is normally left unlocked.

ASW DEPTH CHARGE INDICATOR.— The ASW depth charge indicator (fig. 7-21) is a device that informs the control system whether an ASROC depth charge missile is or is not at the hoist station. Mounted to the back of each hanger rail, the device consists of two plungers and a proximity switch actuator.

Functionally, when a depth charge missile is loaded into a hanger rail, one of the fins of the rocket depresses the spring-loaded fin indicator plunger that extends through the rail. This action moves the switch actuator plunger and actuator magnet.

The magnet will activate a proximity switch (mounted to the RSR at the hoist station) when that hanger rail is indexed to the HOIST position. An electronic signal is relayed to the control system indicating a depth charge round is at the hoist station.

Also, before any hoist cycle may start (for any type of missile), the fin plunger must be retracted to allow the hoist chain to pass. A hydraulic piston on the RSR is made to extend and, through linkage, retracts the plunger from the chain track of the rail.

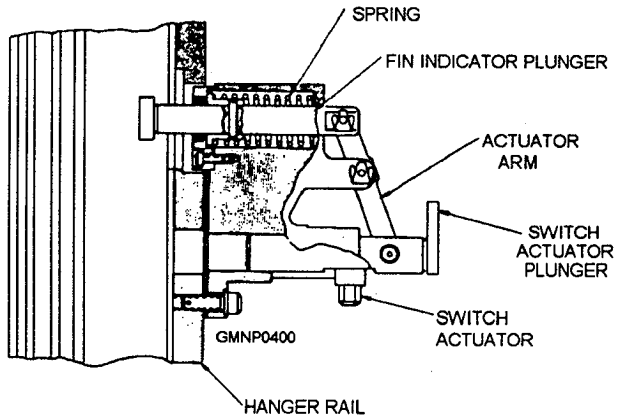

Figure 7-21.—ASW depth charge indicator.

Hoist Assembly

The Mk 26 GMLS hoist assembly (fig. 7-22) is an integral part of the RSR and is very similar to other hoist assemblies. The hoist chain is a link-connected, roller type about 31 feet long with magnet actuators mounted to various links. They activate proximity switches on the chain stowage track that indicate the raised, lowered, and intermediate positions of the hoist.

A hoist pawl and latch, an adjustable link, and a buckling link are on the forward end of the hoist chain. The hoist pawl and latch connect the hoist chain to the pusher bar for hoisting operations. The adjustable link makes possible the proper positioning and alignment of missiles on the launcher guide arm. The buckling link compensates for any overtravel of the chain on an extend cycle.

The curved and retractable chain tracks extend from the hoist speed reducer and drive sprocket assembly to the hanger rail. The curved chain track is stationary. The retractable chain track is a pivoting track that aligns the curved track section with the hanger rail for hoisting operations. When the retractable chain track extends, it actuates a mechanical linkage that releases the pusher bar retainer latch.

SYSTEM NUCLEAR LOCK.— The system nuclear lock (also known as the RSR lock) is a device similar to the hanger rail nuclear locks (fig. 7-23). It is mounted to the retractable chain track of the hoist. Both locks work together to prevent unauthorized loading of nuclear warhead missiles.

Both locks must be locked to perform their intended function. Figure 7-23, view A, shows how the retractable chain track is prevented from aligning with the hanger rail. If the locks are in the conditions displayed in views B, C, and D, hoisting can be accomplished.

One key fits all the rail locks of one RSR, while a different key fits the system nuclear lock. According to nuclear weapon security regulations, the commanding officer or a designated representative (must be a commissioned officer) maintains custody of these keys at all times. To load a nuclear ASROC round, personnel must enter the magazine, prepare the missile, and (according to ship's doctrine) unlock at least one of the locks.

FIXED RAIL.— The fixed rail section is mounted to the top of the RSR's hoist end section. (See figs. 7-19 and 7-22.) This 4-foot rail bridges the gap between a hanger rail and the span rail assembly. All three rails

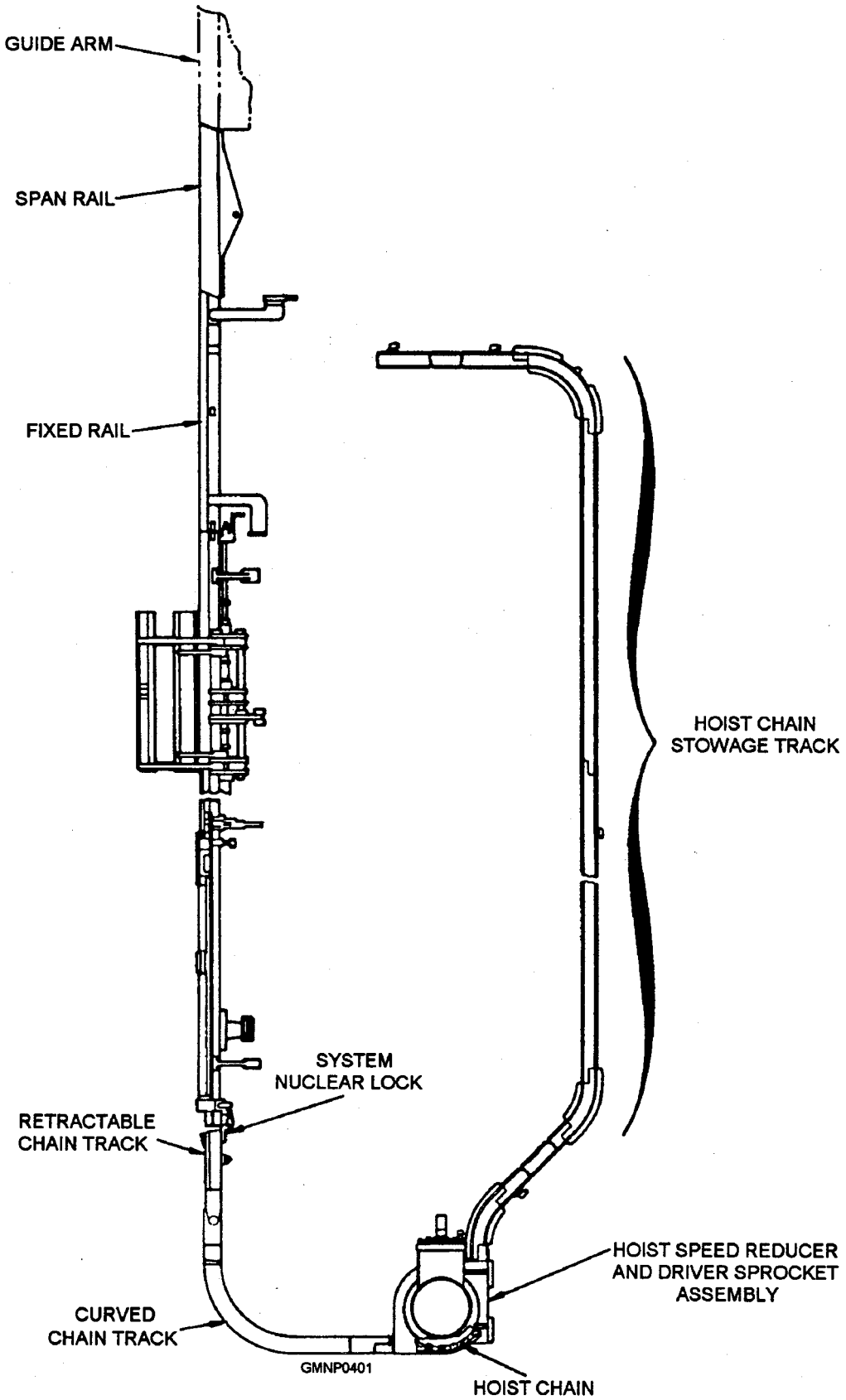

Figure 7-22.—Hoist components, general arrangement.

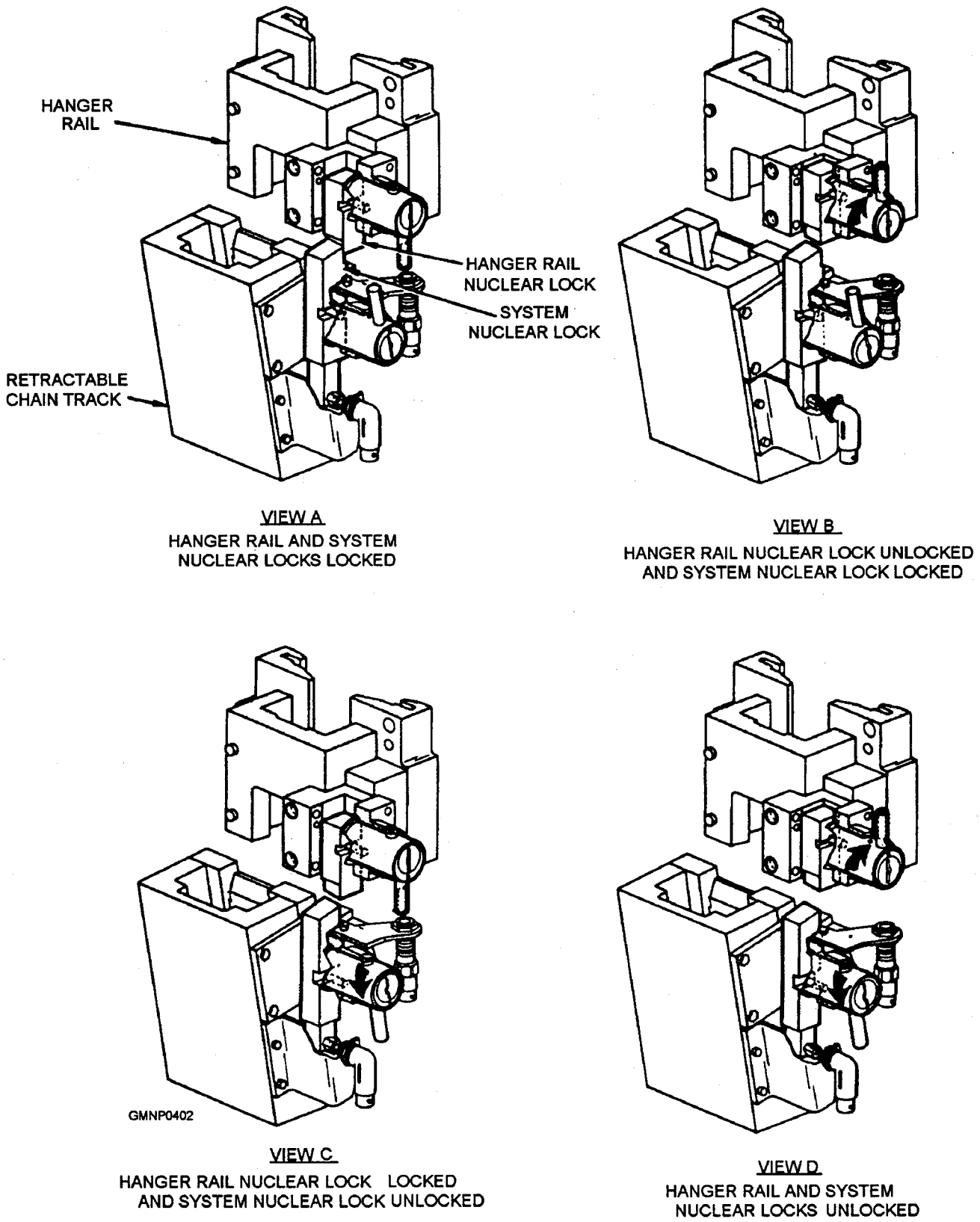

Figure 7-23.—Hanger rail and system nuclear locks.

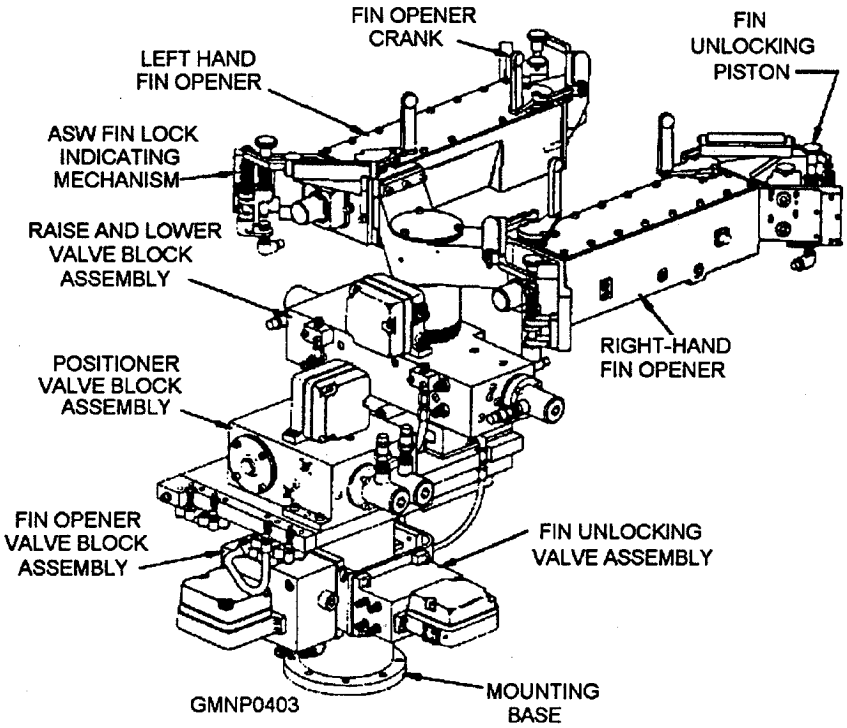

Figure 7-24.—Fin opener assembly.

are locked together by hydraulically operated aligning rods extending into appropriate alignment guides.

Fin Opener Assembly

The Mk 26 GMLS fin opener assembly (fig. 7-24) is mounted to the magazine deck at the hoist station. It is somewhat physically comparable to other fin opener arm assemblies. During a load cycle, the entire assembly shifts laterally between two positions, AAW or ASW, if required. This action aligns the fin cranks to the fins on the different diameter missiles. Once in proper position, the assembly then raises to engage the missile, unfolds the fins (of AAW and ASW rounds), and then lowers.

During an unload cycle of an ASW missile, the fin opener assembly raises, unlocks, and refolds the ASW fins. The fins of AAW missiles cannot be automatically refolded. System personnel must enter the magazine and manually close them.

Associated with the fin opener assembly is an AAW identification probe (fig. 7-25). It is located within the inlet of the plenum assembly at the hoist station. The probe is used to identify AAW missile groups before they are hoisted. When the tin opener assembly shifts to the AAW position, an actuator plate on the left-hand opener engages a linkage rod attached to the probe. As the assembly raises (or lowers), the probe also raises (or lowers) to engage (or exit) the aft receptacle of the missile.

Magazine Hydraulic Systems

Within each RSR's six-missile section and hoist end section are the components that produce the necessary hydraulic forces to operate the system during normal

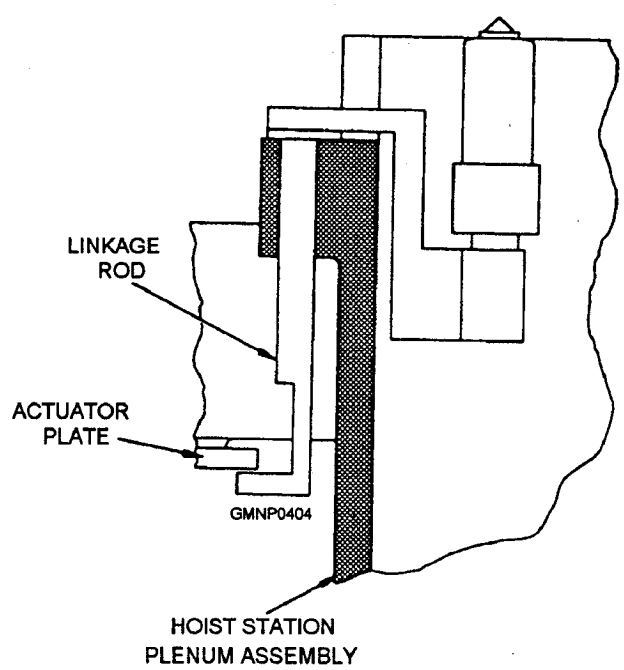

Figure 7-25.—AAW identification probe.

and emergency conditions. The principal hydraulic systems are the RSR/hoist main accumulator and power drive system and the exercise and emergency accumulator system.

RSR/HOIST SYSTEM.— Sharing a common electric motor, the RSR/hoist main accumulator system and the RSR/hoist power drive function during all normal GMLS operations. The main accumulator system supplies various hydraulic fluid pressures to operate components of the loading system, the strikedown system, the jettison devices, and the RSR/hoist power drive.

The RSR/hoist power drive (fig. 7-26) provides the hydraulic power and control needed to index the hanger rails and to raise/lower the hoist chain and pawl. A hydraulically operated shifter mechanism transfers the output of the hydraulic transmission to either the RSR speed reducer and drive sprocket or to the hoist speed reducer and drive sprocket. The individual drive trains for the RSR and hoist are shown in figure 7-26.

EXERCISE AND EMERGENCY ACCUMULATOR SYSTEM.— Each RSR contains an exercise and emergency accumulator system. It is used in the event of normal electrical power failure or for

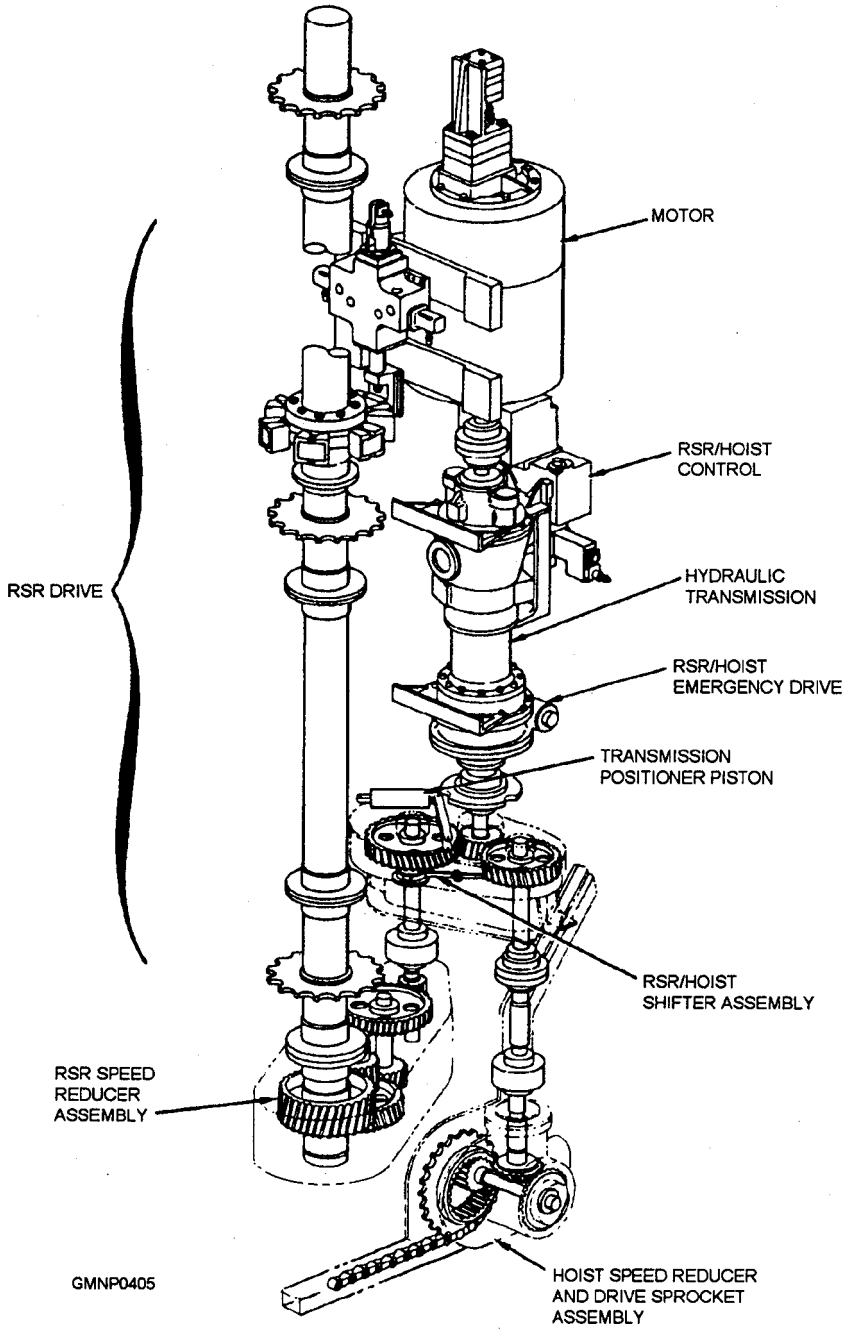

Figure 7-26.—RSR/hoist power drive.

exercise/maintenance purposes. This system is hydraulically part of the RSR/hoist main accumulator system. However, it uses a smaller electric motor and pump to deliver a reduced hydraulic fluid pressure to the magazine components and the train power drive.

LAUNCHER

The launcher consists of all the components necessary to receive missiles from the magazine and prepare them for launching. A rectangular plate about 18 feet long and 10 feet wide, called the platform, supports the carriage and two dud-jettison devices. It also provides mounting surfaces for the blast doors, span rails, and some train drive components.

The carriage supports the guide arms and consists of various components, as shown in figure 7-27. The stand is secured to the platform and serves as a stationary support structure. The base ring fits inside the stand and rotates on two sets of bearings. Ball bearings near the top of the stand support the weight of the rotating launcher. Roller bearings near the bottom of the stand hold the base ring in vertical alignment.

The trunnion support is a boxlike structure mounted to the top of the base ring. It supports the trunnion tube on ball- and roller-bearing assemblies. It also houses the elevation drive and other hydraulic components. The electrical contact ring is located within the base ring area. It transmits electrical power and anti-icing fluid between the stationary and rotating parts of the launcher.

Blast Door and Span Rail

A blast door is mounted to the platform under each guide arm. (See fig. 7-17.) In opening, the door unlatches, raises, and swings aside. This provides sufficient clearance for a missile with fins extended to pass through. In closing, the sequence is reversed and a seal on the bottom of the door forms a water- and blast-tight closure,

A separate span rail assembly (not part of the blast door) is located inside the door opening. (See fig. 7-22.) It is a pivoting rail segment, about 3 feet long, extended by a hydraulic piston. A bumper pad on the rail contacts the edge of the blast door opening to provide a positive aligning stop. When fully extended, aligning and latch rods lock the span rail to the freed rail of the guide arm and the fixed rail of the magazine.

Guide Arm

The guide arm structure (fig. 7-28) is a steel weldment with three different guide rails, ASW-related components, and AAW-related components.

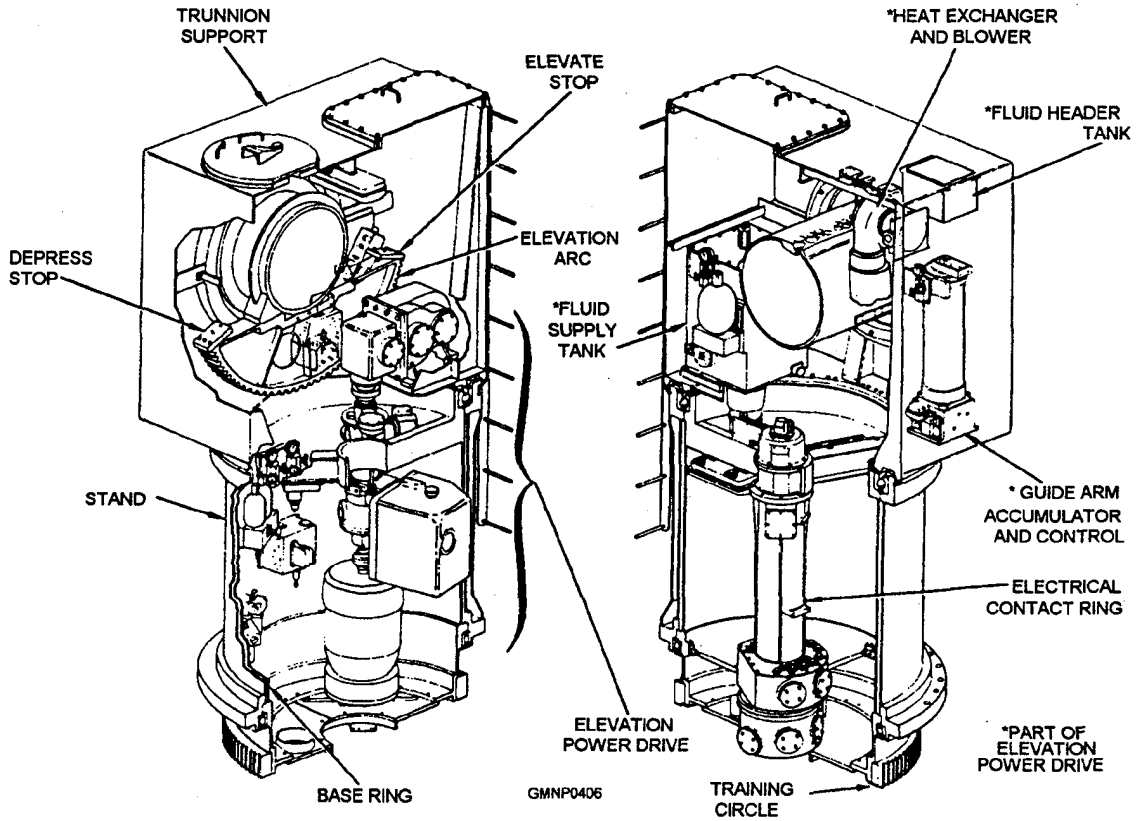

Figure 7-27.—Carriage, general arrangement.

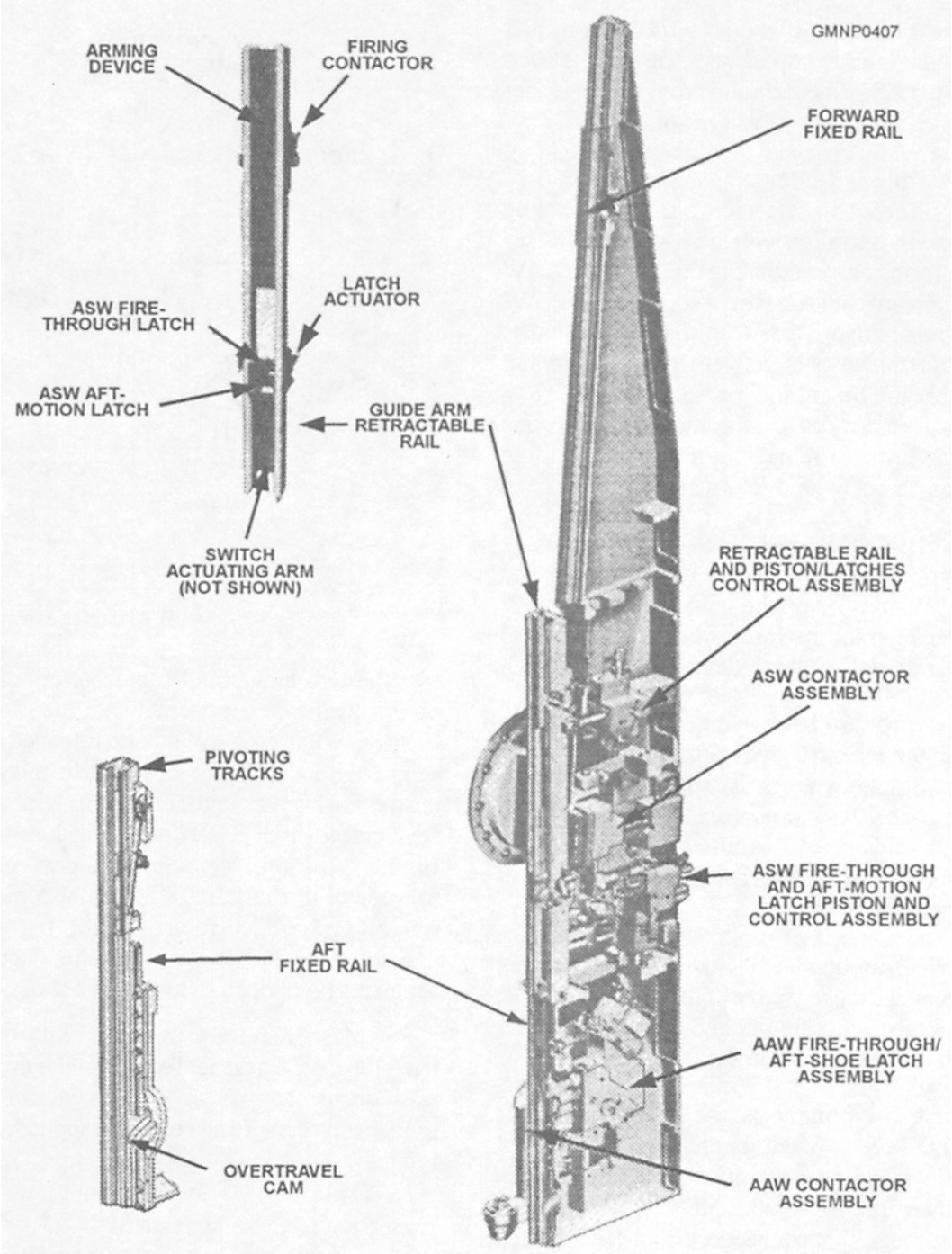

Figure 7-28.—Guide components, general arrangement.

Depending on the mode (AAW or ASW) in which the system is operating, the applicable equipments connect to and prepare the missile for flight.

GUIDE RAILS.— Of the three individual guide rail sections on each guide arm, two are fixed and one is movable. The total length of the aft fixed rail is about 50 inches. It contains a pair of hinged rail track segments and an overtravel cam. The pivoting segments, about 19 inches long, open and close to form the rail track for the aft shoe of an AAW missile. The overtravel cam accommodates a positioning link on the hoist chain and pawl to allow proper positioning of a missile on the guide rail.

The forward fixed rail is about 11 1/2 feet long and contains no fictional components. This rail is used only when firing ASW missiles and provides the longer on-rail guidance required by this type of missile.

The retractable rail is mounted between the two fixed rails and is about 6 1/2 feet long. During a loading operation, it extends to align with the aft freed rail. This combination forms one continuous rail track for AAW and ASW forward missile shoes. With an AAW missile, the rail remains extended until the round is launched. As the missile moves forward, the rail retracts to clear the fins of the missile. With an ASW missile, the rail retracts as soon as the round is loaded onto the guide arm. It remains retracted to form the longer guidance track with the forward freed rail.

ASW RAIL COMPONENTS.— There are three different components involved with preparing and launching ASW missiles on the guide arm. The ASW fire-thru and aft-motion latch piston and control assembly operates two of these devices.

The ASW fire-thru latch is extended through the rail to engage the forward edge of the aft missile shoe. As it extends, it causes the ASW aft shoe restraining latch (on the pusher bar) to release. During firing, the fire-thru latch holds the ASW missile on the rail until about 2,600 pounds of thrust is developed by the rocket motor and then it trips (releases).

The ASW aft-motion latch is extended by the same assembly to engage the rear edge of the aft missile shoe. It secures the missile to the rail and allows the pusher bar and hoist chain to retract to the magazine.

The third component is the ASW contactor assembly (fig. 7-29). When it extends, the contactor pins penetrate a pad near the aft shoe of the missile. Electrical power, preflight data, and firing voltages are transmitted through this connection from UBFCS and WCS to circuits within the missile. At firing, the contactor retracts into the guide arm.

AAW RAIL COMPONENTS.— The rail components required to load, prepare, and launch AAW missiles involve three separate (and more complicated) assemblies. Located above the aft fixed rail, the AAW fire-thru and aft-motion latch assembly (see fig. 7-28) is functionally similar to its ASW counterpart. The AAW fire-thru latch trips from 4,000 to 4,600 pounds. The AAW aft-motion latch extends to release the AAW aft-shoe restraining latch (on the pusher bar) to secure the missile to the rail.

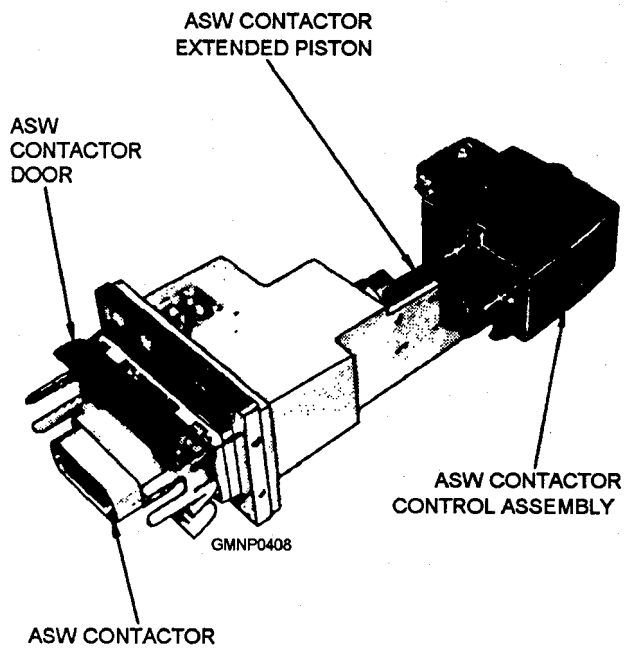

Figure 7-29.—ASW contactor assembly.

The two hinged-rail segments (mentioned earlier on the aft fixed rail) operate with the aft-motion latch linkage. When an AAW missile is loaded to the rail, the segments are open to accept the missile. As the aft-motion latch extends, mechanical linkages cause the segments to pivot closed, engaging the aft missile shoe. In this position, the segments prevent any lateral movement of the missile. They also provide a short on-rail guidance track. After firing or during unloading, whenever the aft-motion latch retracts, the segments pivot open to release the shoes.

A blast shield also operates with the aft-motion latch linkage. The shield extends with the latch. In this position, it can protect the mechanism from launch sequence, rocket firing voltage is applied, and the motor ignites.

Launcher Hydraulic Systems

There are three hydraulic systems associated with the launcher. They provide all the necessary hydraulic forces required to train, elevate, depress, and operate the guide arm components.

The train power drive system is located under the launcher platform. It drives the launcher through the training circle gear mounted to the base ring.

The elevation power drive system is located inside the carriage. It drives the guide arms through the elevation arc mounted to the trunnion tube. In addition to elevating or depressing the guide arms, the elevation

power drive system provides the main accumulator pressure for the guide arm components. Figure 7-27 shows the location of the elevation power drive and the guide arm accumulator and control assembly.

The third hydraulic system is the launcher exercise and emergency accumulator system. (It is very similar to the exercise and emergency accumulator systems described with the RSR/hoist power drives.) This system is hydraulically connected to the elevation power drive system. Hydraulic fluid at reduced pressure is supplied to operate the guide arm components and the elevation power drive.

LAUNCHING SYSTEM CONTROL

The launching system control components perform three main functions: (1) They distribute electrical power, (2) they process system orders and responses, and (3) they perform tests to determine system readiness. As you study the Mk 26 GMLS control system, you will notice a break with tradition. Panels are no longer designated EP1, EP2, and so on, but are known by their full name or first-letter abbreviations.

Most communications and interface between weapons control, FCS, and the GMLS are in digital word format. (There may be some terms presented here with which you are not yet familiar, but they will be explained later in the text.) Although not physically located in the GMLS area, the digital serial transceiver (DST) (shown in fig. 7-18) is a solid-state electronic module in the weapons control area. It serves as a communication Iink between WC and launching system control. This module receives parallel order data (electrical signals) from a computer in WC. It changes the order data from parallel to serial form for transmission to the ICS through cables. One cable connects to the digital interface module (DIM) and the other to the local control module. The order data signals direct launching system operations in remote control.

The DST also provides response data from launching system control to WC. The DST receives serial response data from the local control module on cables. It changes these data from serial to parallel form. In parallel form, these data are in the correct format for transmission to the WC computer. The response data show the status of the launching system.

Integrated Control Station (ICS)

The integrated control station (ICS) (fig. 7-30), located at the hoist end of the magazine, is a water- and blast-tight compartment. It houses most of the power, control, monitoring, and test equipments of the system. The major cabinets in the ICS are the power distribution center (PDC), the MCC, the right- and left-hand circuit card housings, and the train and elevation control test center.

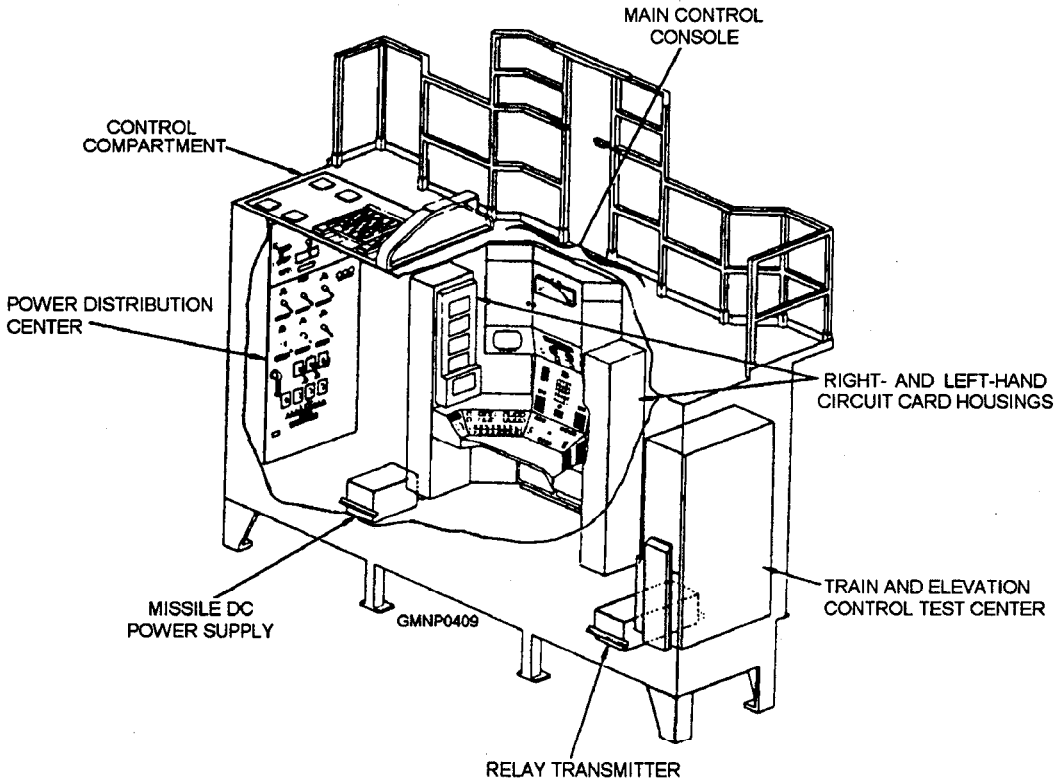

Figure 7-30.—Integrated control station.

POWER DISTRIBUTION CENTER (PDC).— PDC houses the electrical components that distribute and regulate all power to the launching system. It is comparable to other EP1 power panels.

MAIN CONTROL CONSOLE (MCC).— The MCC (fig. 7-31) is a modular, wraparound type of unit. It contains the operating controls and indicators needed for programming and monitoring launching system operations. The individual modules in the MCC are shown in separate figures for clarity.

The video monitor module (fig. 7-32, view A) consists of electrical components and a TV screen used for watching either the launcher area or rear magazine areas.

The local control module (fig. 7-32, view B) is used by the MCC operator as the local control station for the train and elevation power drives. Also provided are a firing safety switch, rail and system nuclear lock indications, and digital readout displays of both launcher ordered and actual positions. This module acts as a communication link between the DST and other ICS equipments.

The intercom module assembly (fig. 7-32, view C) has a 20-station intercom to other parts of the ship. A small compartment can store a set of sound-powered phones for the MCC operator (plus a deck of cards, favorite magazines, and the latest copy of the GM training manual).

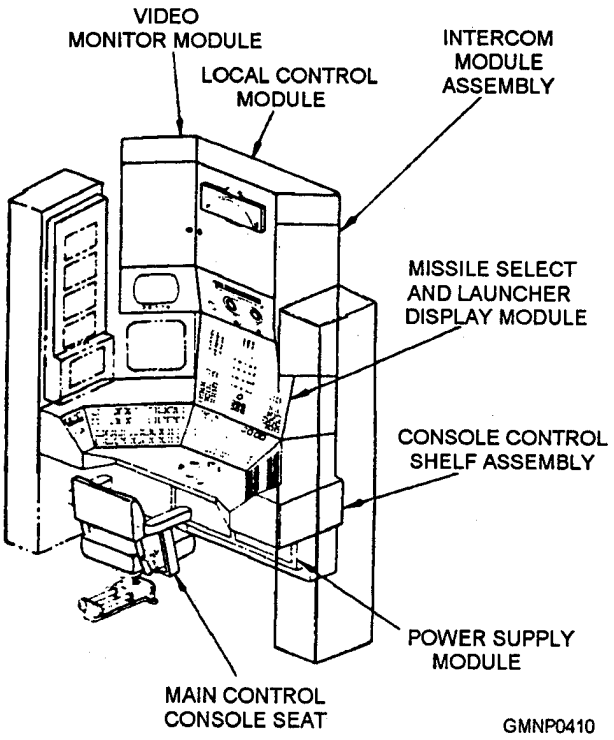

Figure 7-31.—Main control console.

The missile select and launcher display module (fig. 7-33) has a variety of switches and indicators used by the MCC operator during remote and local control modes. When the system is operating in remote control, the operator monitors the indicators that show the status of power drives, remote WC orders, and load-and-fire operations. When the launching system is operating in local control, the operator selects the type of missile, a load (or unload) operation, and either one or both launcher guide arms and RSR/hoist equipment.

The console control shelf assembly is directly in front of the MCC operator's chair. It provides a horizontal working space and mounts five separate modules. They will be described left to right.

The system availability module (fig. 7-34, view A) contains push-button indicating and toggle switches. They are used to tell WC of launching system availability status and to select various test modes.

The strikedown step module (fig. 7-34, view B) contains the strikedown hatch, emergency motor, main motor, and strikedown step control push-button indicating switches.

The system control module (fig. 7-34, view C) contains the all motors start/stop, loading selection, pointing selection, magazine safety, launcher warning bell, and system selection groups of switches.

The launcher step module (fig. 7-34, view D) contains the launcher step control, jettison, and launcher emergency drive groups of switches. This module provides the controls and indicators for performing and monitoring load and jettison operations and for directing the launcher using the emergency motors.

The telephone selector module (fig. 7-34, view E) has two rotary switches and a telephone jack. The load and firing indications lamp test switch is a 13-position rotary switch. The MCC operator uses this switch to test the load-and-fire indicator lamps in the missile select and launcher display module. The telephone selector switch is a six-position rotary switch. The MCC operator positions this switch to select telephone channels to communicate with either WC or local launching system sound-powered phones.

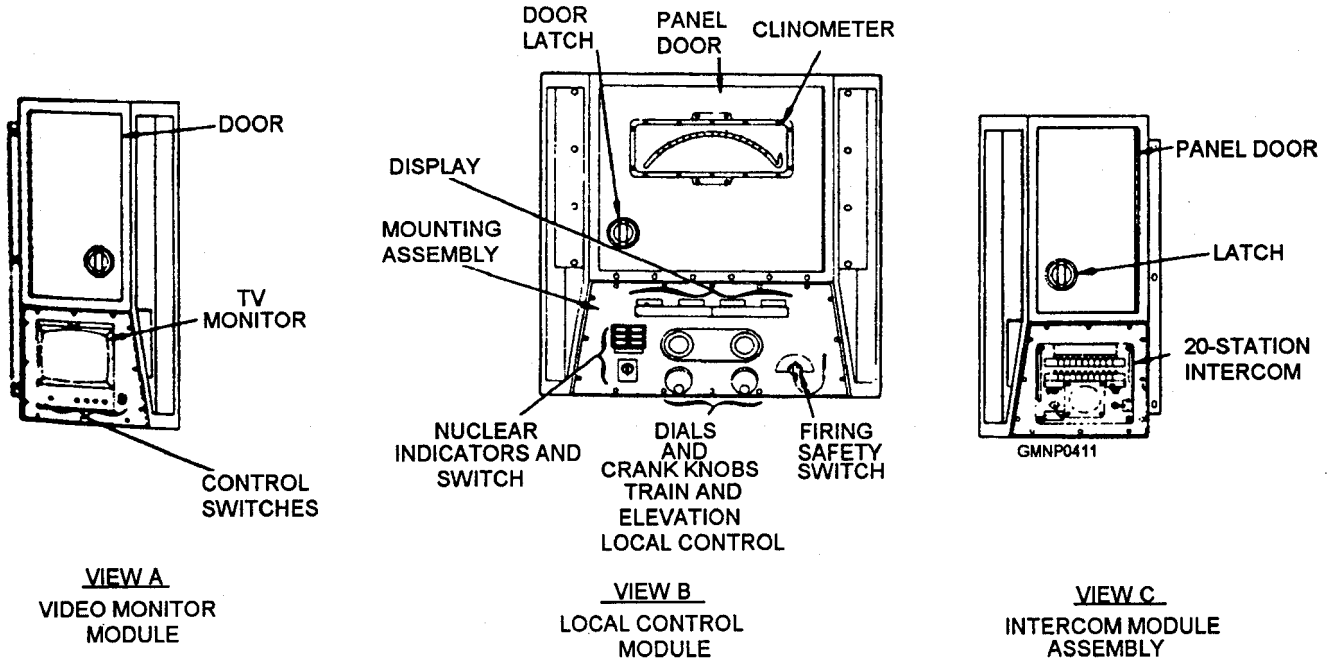

Figure 7-32.—Main control console modules.

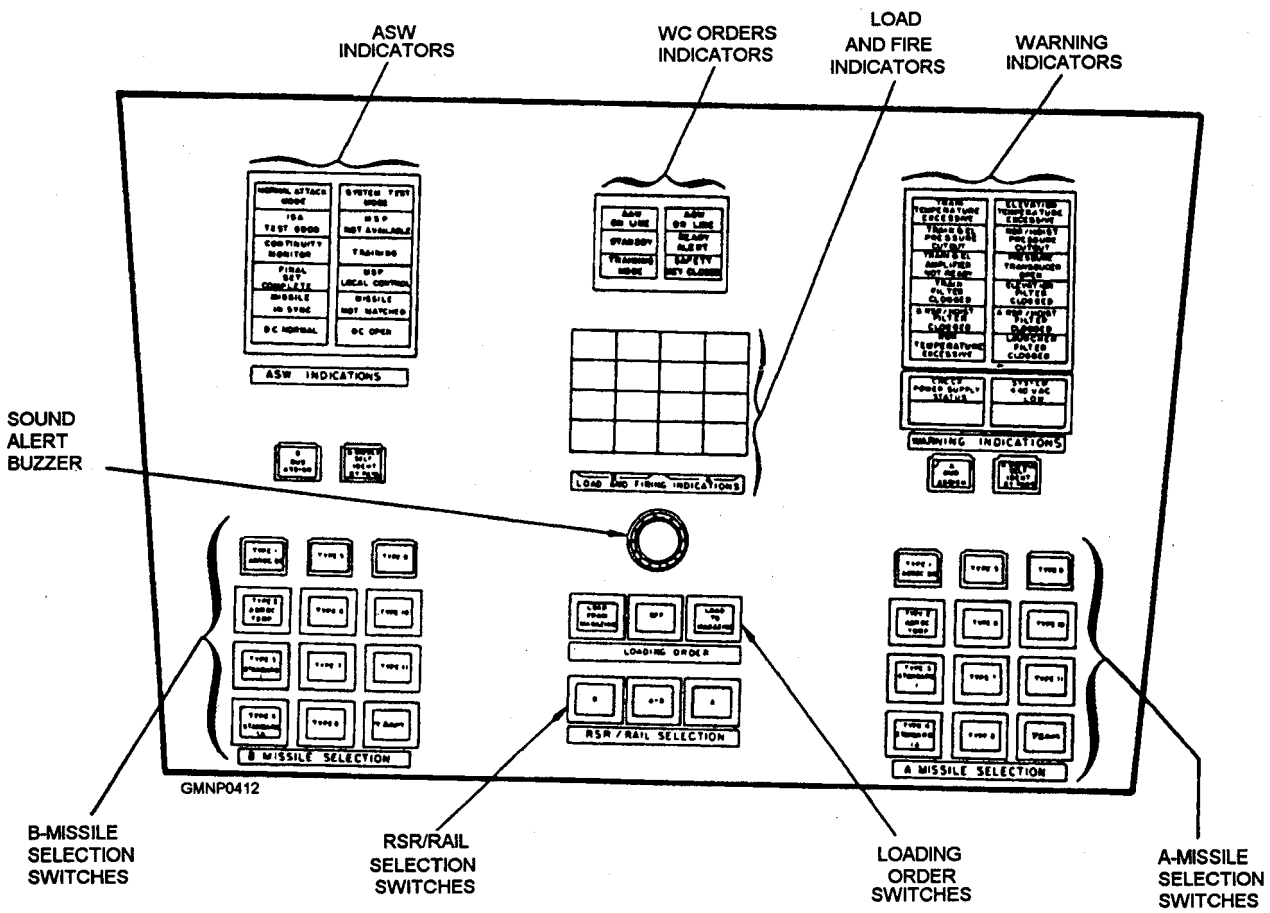

Figure 7-33.—Missile select and launcher display module.

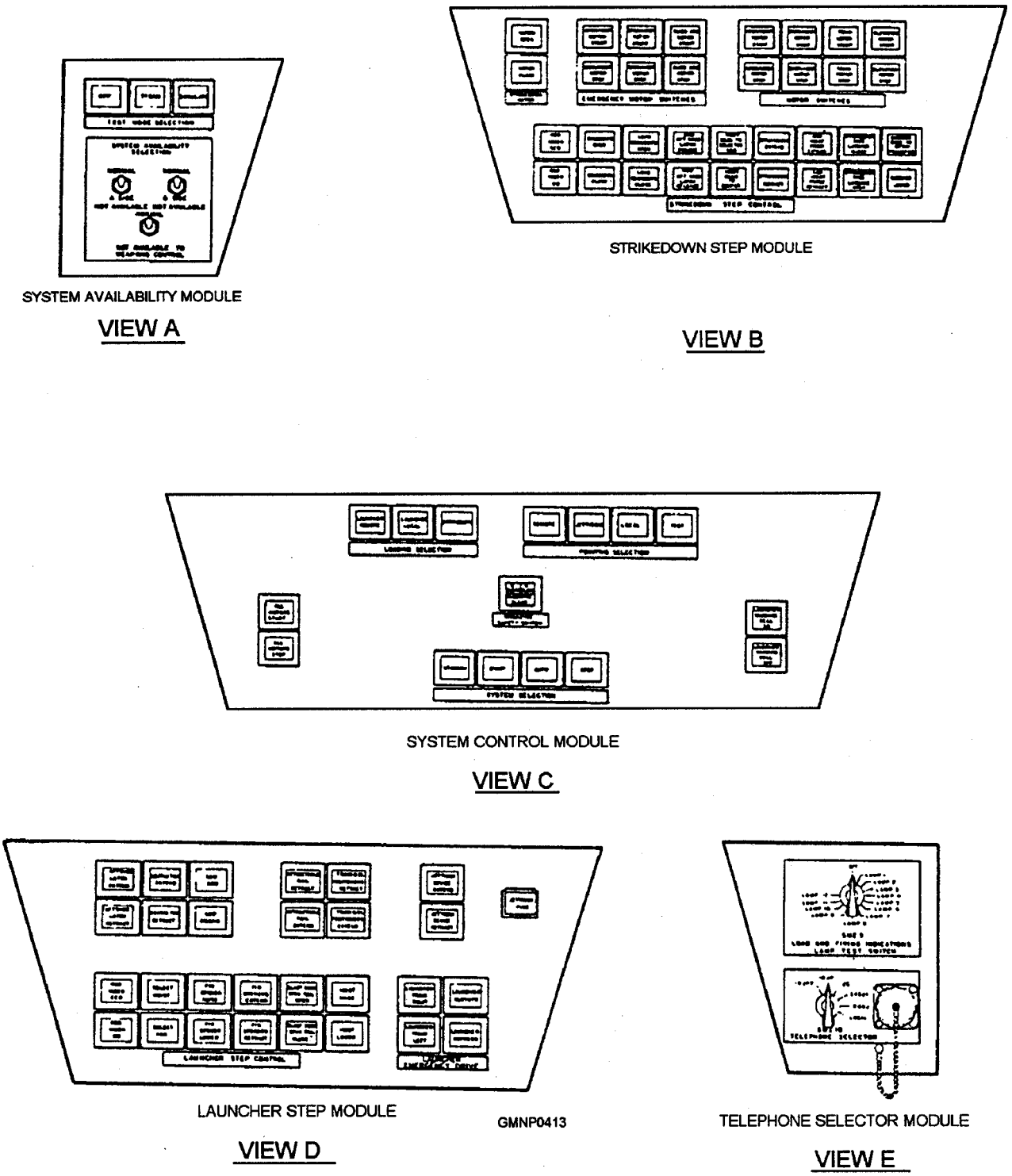

Figure 7-34.—Console control shelf assembly modules.

The last component of the MCC is the power supply module (fig. 7-35). Electrical receptacles on the bottom of the module connect it to the PDC. The components of the module provide regulated dc power to solenoids and solid-state circuits throughout the system. Many of the various rated de-power supplies are identical, interchangeable, and adjustable.

RIGHT- AND LEFT-HAND CIRCUIT CARD HOUSINGS.— The right- and left-hand circuit card housings (fig. 7-36) are on either side of the MCC. These housings contain the electrical/electronic components used for system control. The two housings are arranged the same but show different information. The right-hand circuit card housing shows A-side, train, and elevation system status. The left-hand circuit card housing shows B-side and strikedown system status.

TRAIN AND ELEVATION CONTROL TEST CENTER.— The train and elevation control test center

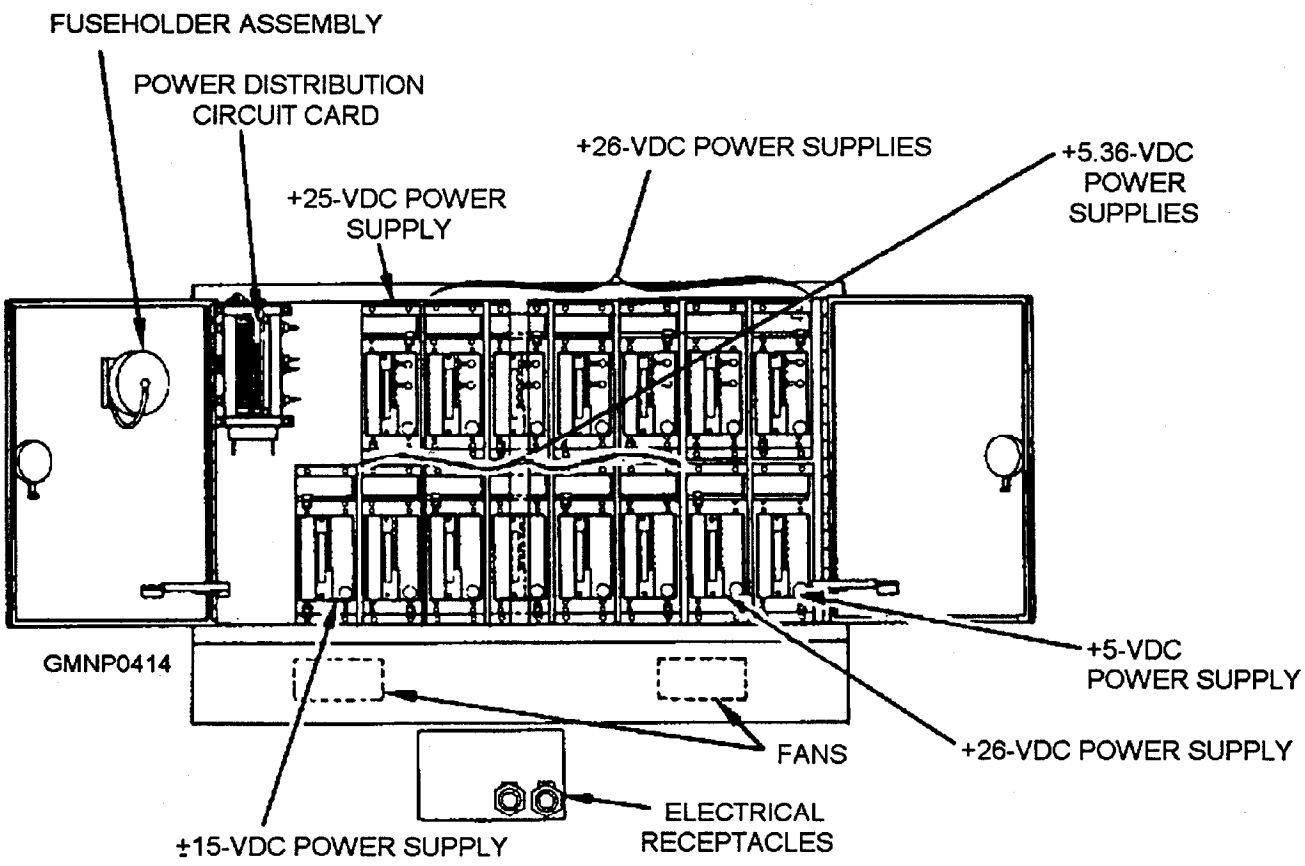

Figure 7-35.—Power supply module.

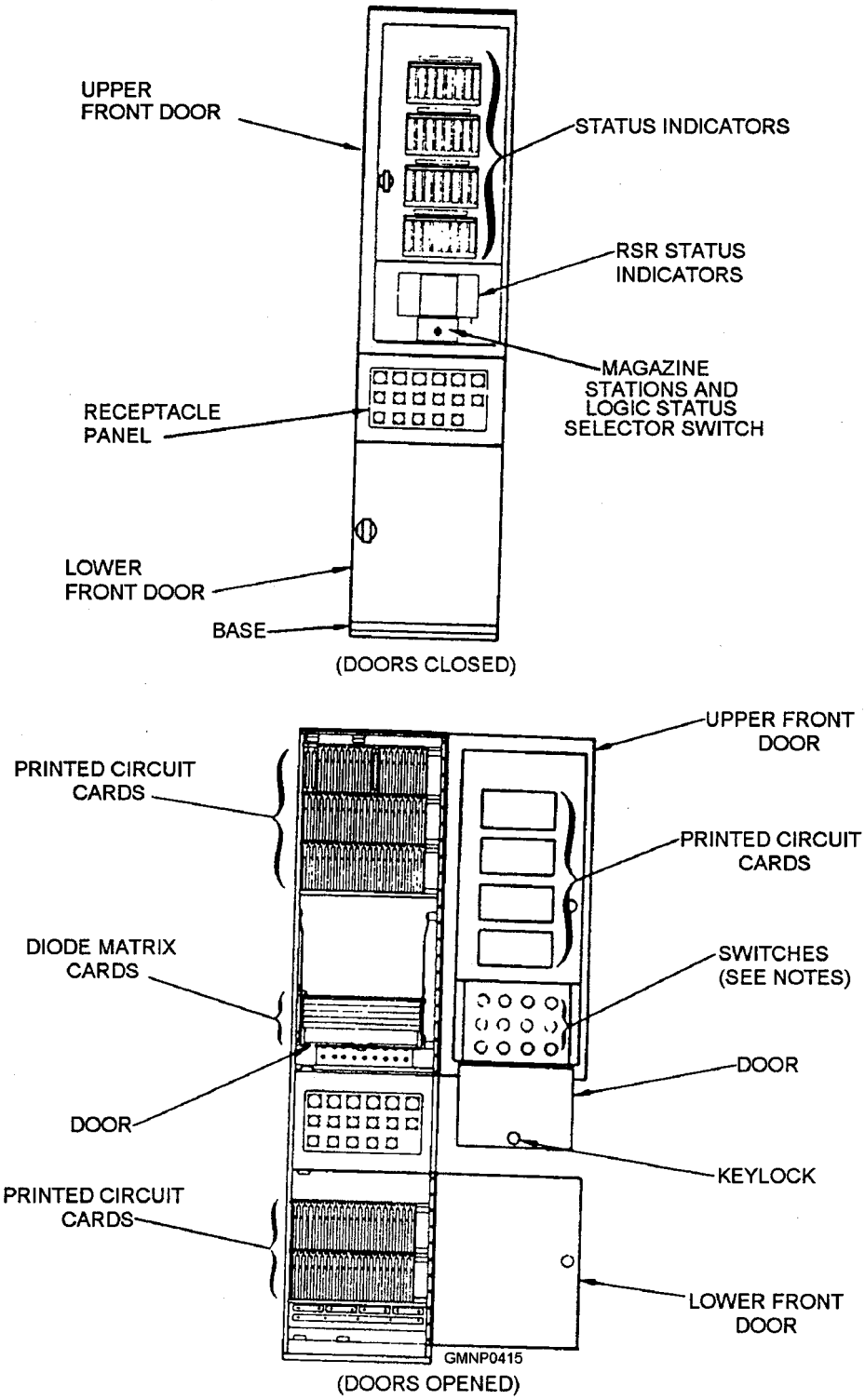

NOTE: MOD 0 HAS 12 MISSILE TYPE ASSIGNMENT SWITCHES.
MOD 1 HAS 22 MISSILE TYPE ASSIGNMENT SWITCHES.
MOD 2 HAS 32 MISSILE TYPE ASSIGNMENT SWITCHES.

Figure 7-36.—Circuit card housings, typical.

(fig. 7-37) is mounted on the right bulkhead of the control compartment. It houses launching system test equipment, a DIM, and an ESCU.

Launching system test equipment is on the upper two shelves of the train and elevation control. The test equipment is used for programming and signal tracing of train and elevation components. Operating cycles of the launching system may be timed and proximity switch actuators may be tested and charged. The elapsed running time of motors, control system, and strikedown equipment, along with the cumulative number of RSR index and raise hoist cycles, are monitored. The equipment is also used for programming and testing integrated circuit components.

The DIM is a solid-state electronic control module. It provides train and elevation analog signals to the train and elevation control and to the ESCU. Inside the DIM are PC cards that accept either a remote, test, load, or jettison order signal. The signal depends on the pointing mode selected at the MCC. In remote mode, the PC cards accept serial order data from the DST or-on an alternate path-the same serial order data from the local control module (view Bin fig. 7-32).

The PC cards change the serial order data to two analog signals: a synchro position order and a velocity order. The synchro position order causes the train and elevation control to position the launcher. The velocity order allows the ESCU to compensate the train and elevation control.

The PC cards process test orders the same way as remote orders, except that the order signal generator (OSG) provides the serial order data. For load or jettison mode, a diode pinboard in the DIM generates fixed position signals. These signals allow the PC cards to generate the desired position.

The ESCU is the servo amplifier for train and elevation control. The PC cards inside the ESCU generate command signals that cause the train and elevation power drives to move the launcher to an ordered position. The PC cards give command signals by processing analog synchro pointing orders from the DIM and comparing these orders to the actual position of the launcher. The actual launcher position is provided to the ESCU by feedback signals from train and elevation controls.

Auxiliary Equipments

Located on top of the ICS compartment are other components not directly associated with the control system, but they do bear mentioning.

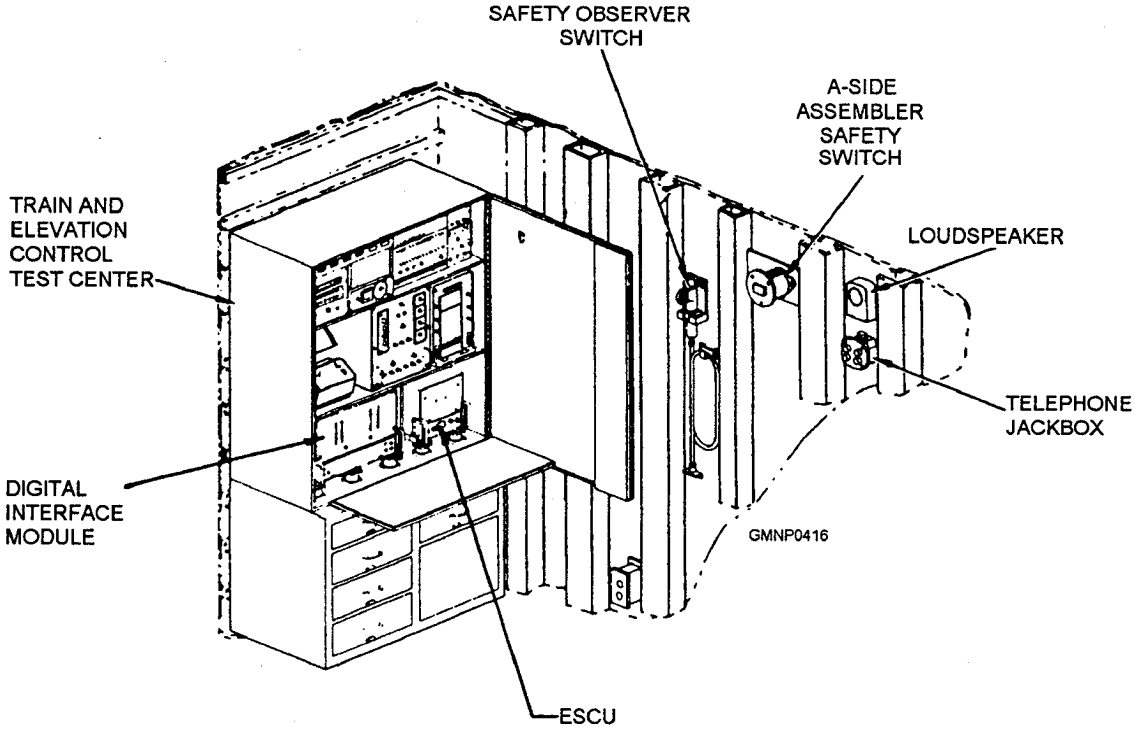

Figure 7-37.—Train and elevation control test center.

The personnel access trunk (fig. 7-38) serves as a passageway connecting the ship security station to the ICS. It also mounts various weapons system-related electrical and electronic equipments. Interconnecting cabling from WC and ship's power enter the trunk and are routed to a receptacle assembly. The cables are then attached to quick-disconnect plugs and routed to the ICS.

A filter box assembly has components that filter 115-volt ac, 400-Hertz synchro power and the 28-volt dc power for firing circuits. A channel selector (not part of the launching system) contains components used to match the frequency of the AAW missile on the launcher rail to the radar channel frequency of the fire control system.

An ASW-missile setting panel (also not part of the launching system) contains electrical and electronic equipment used for programming ASW missiles. The thermal battery compartment (shown in fig. 7-18) stores 15 ASROC missile (depth charge) thermal batteries. A battery is installed manually in the weapon before it is loaded onto a guide arm. The compartment has two doors and a combination lock.

Mk 41 VERTICAL LAUNCHING SYSTEM (VLS)

LEARNING OBJECTIVES: Explain the purpose/function of the Mk 41 vertical launching system (VLS). Identify the major components and Mod differences of the VLS.

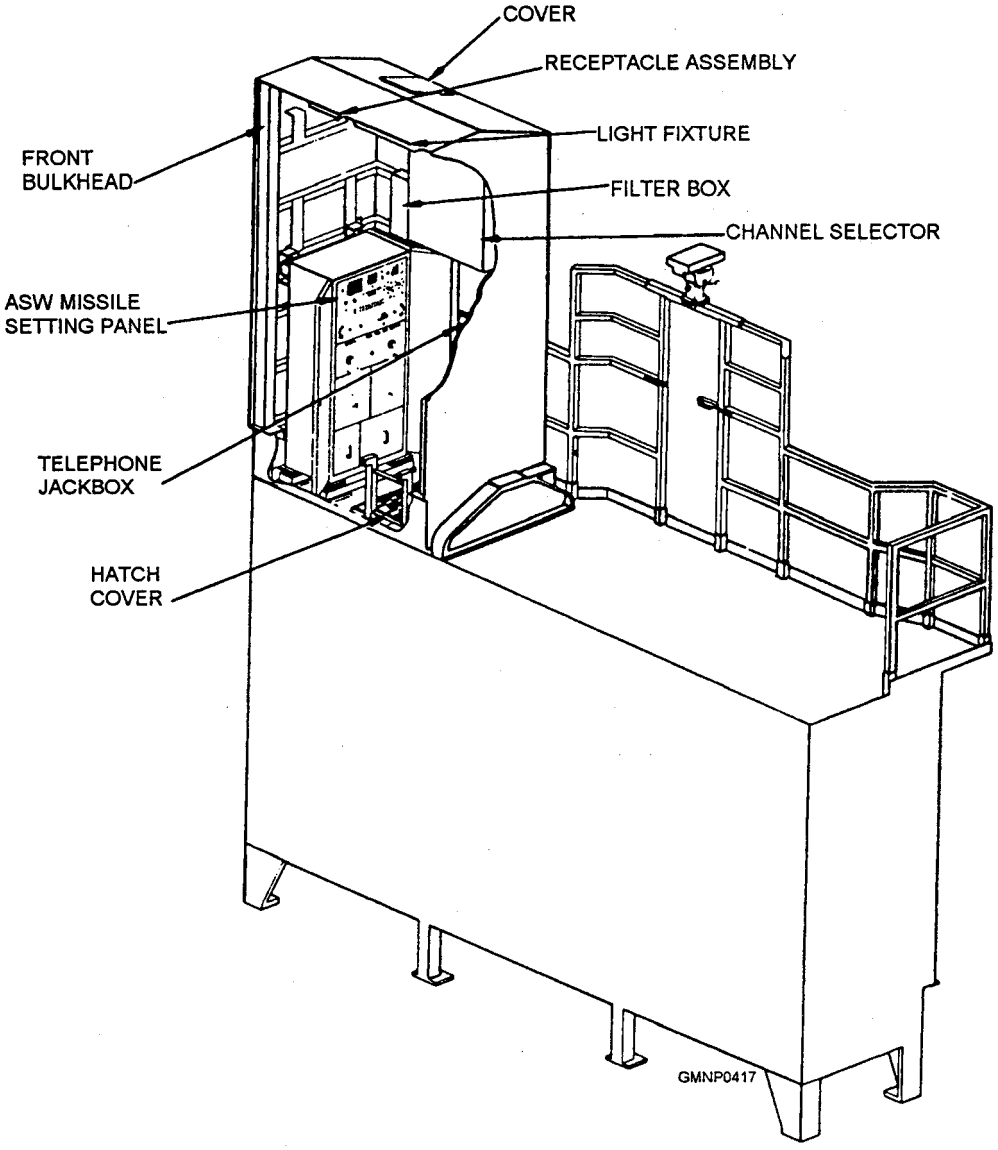

Figure 7-38.—Personnel access trunk.

We will now discuss the physical and functional characteristics of the Mk 41 Mods 0, 1, and 2 VLSs. The Mk 41 Mod 0 VLS is used with the AEGIS, Tomahawk, and underwater weapon systems onboard CG-47 and CG-52 and up class ships. The Mk 41 Mod 1 is used with the Tomahawk and underwater weapon systems onboard DD-963 class ships. The Mk 41 Mod 2 is used with the AEGIS, Tomahawk, and underwater weapon systems onboard DDG-51 class ships.

DESCRIPTION AND CAPABILITIES

The VLS (figs. 7-39, 7-40, and 7-41) is a multipurpose launching system that can load/accept, stow, select, prepare for launch, and launch the Standard missile Type 2 (SM-2), the Tomahawk cruise missiles, and the vertical launch antisubmarine rocket (ASROC VLA) against air, surface, land, or subsurface targets.

The missiles are contained in separate sealed canisters that are installed vertically below deck in

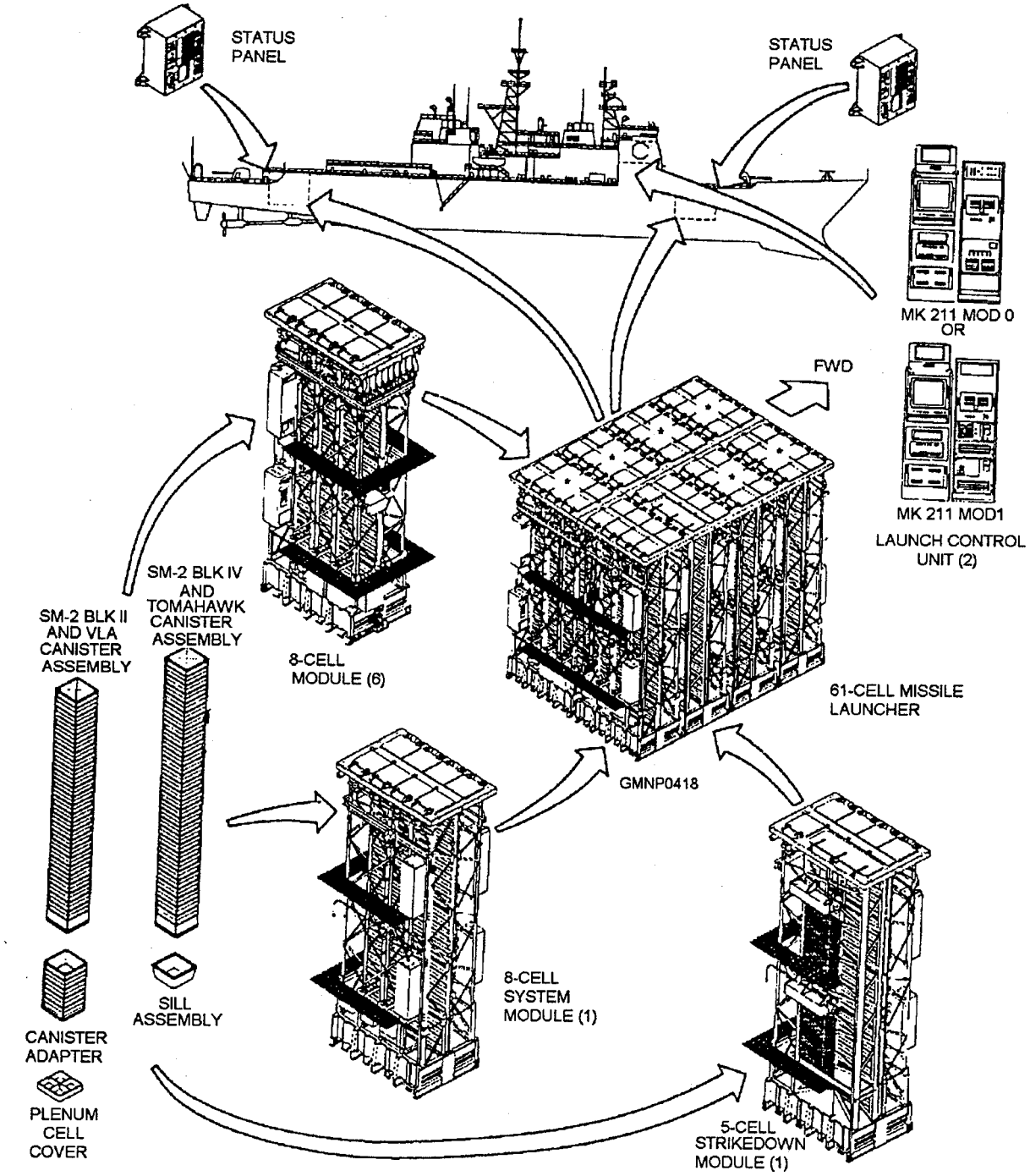

Figure 7-39.—Vertica1 Launching System Mk 41 Mod 0.

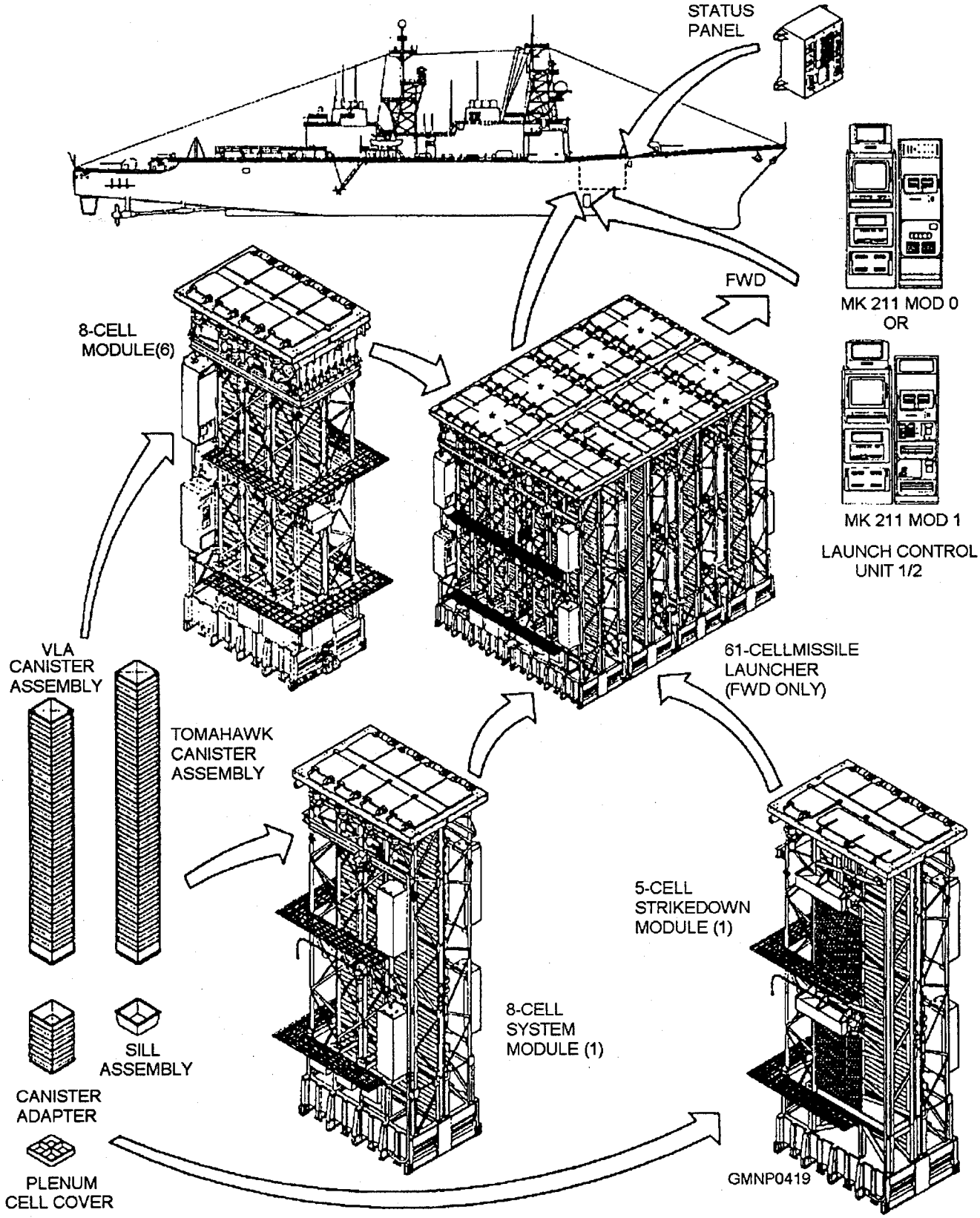

Figure 7-40.—Vertica1 Launching System Mk 41 Mod 1.

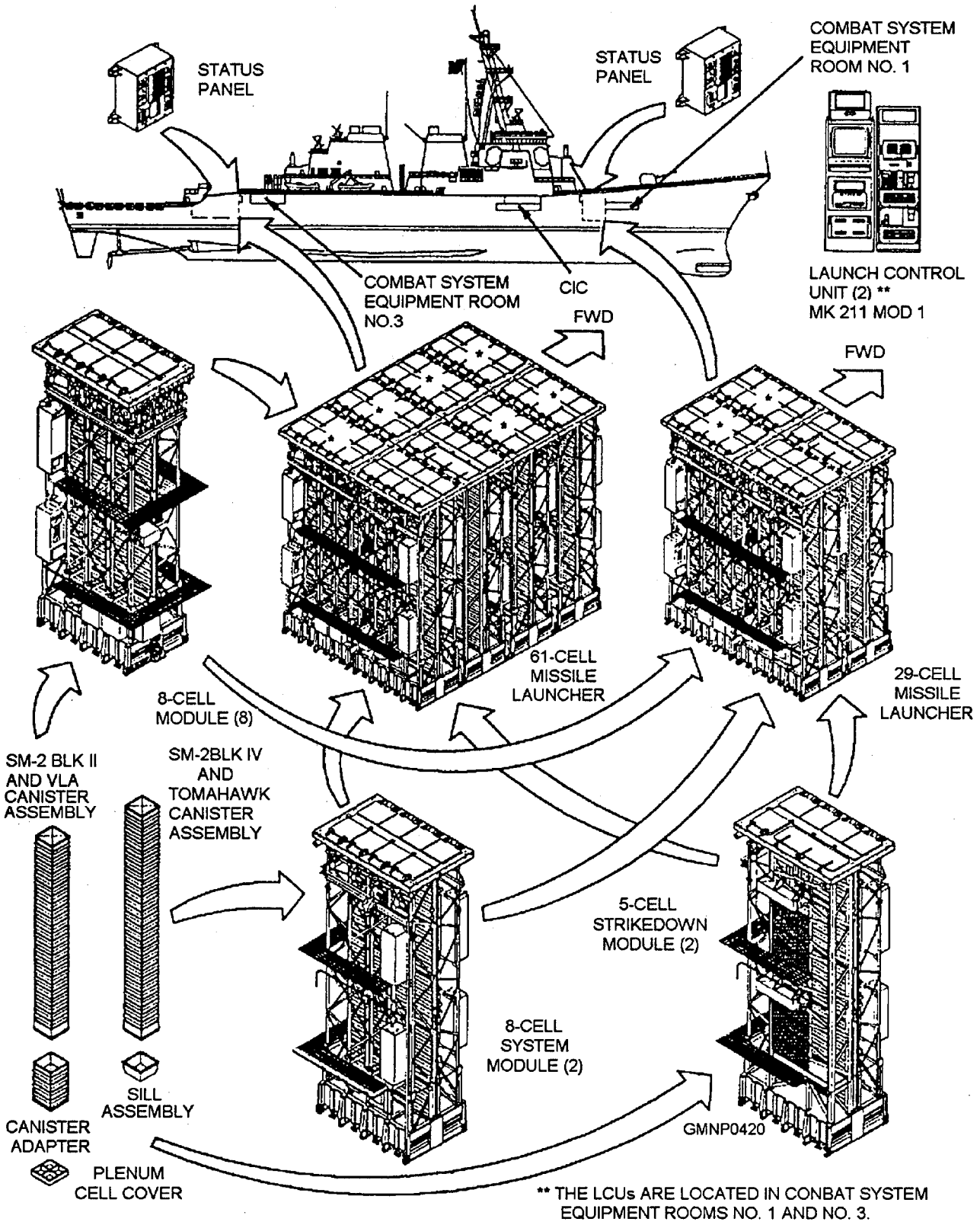

Figure 7-41.—Vertical Launching System Mk 41 Mod 2.

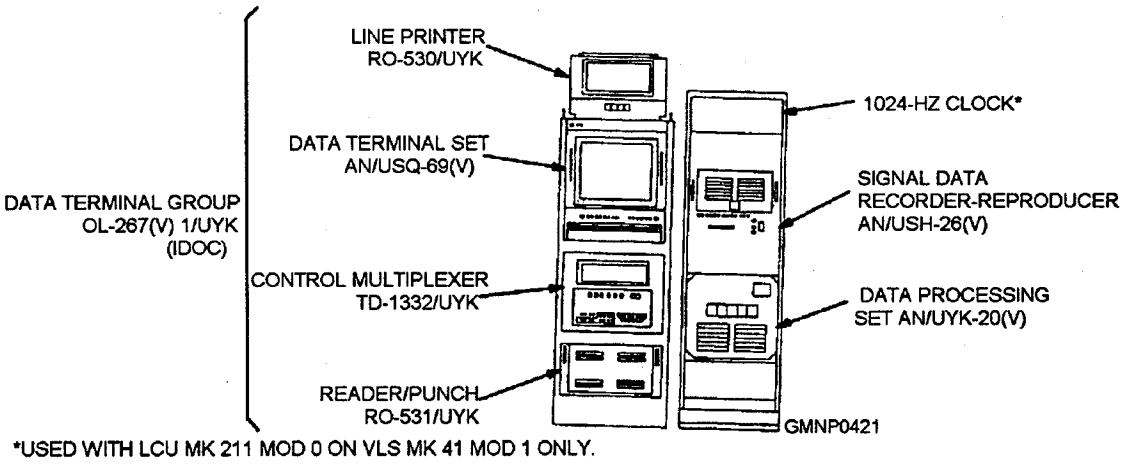

Figure 7-42.—Launcher Control Unit Mk 211 Mod 0.

individual cells of a vertical launcher. The Mk 41 Mod 0 VLS on CG-47 and -52 and up class ships has both a forward and aft launcher with 61 cells in each. The Mk 41 Mod 1 VLS on DD-963 class ships has a single, forward 61-cell launcher. The Mk 41 Mod 2 VLS on DDG-51 class ships has an aft launcher with 61 cells and a forward launcher with 29 cells.

LAUNCHER CONTROL UNITS (LCUs)

Each Mk 41 VLS contains two launcher control units (LCU 1 and LCU 2), Mk 211 Mod 0 or Mk 211 Mod 1 (figs. 7-42 and 7-43), depending on the class and the equipment installed. The LCUs interface with the ship's WCSs, manage VLS operations, and interface with VLS weapons for hazard monitoring and to select, prepare, and launch missiles. Each LCU is capable of controlling all missiles in either launcher. They maintain simultaneous communications with the WCSs and each other.

Status Panel

The status panel Mk 416 Mod 0 or Mk 430 Mod 0 monitors hazards and continuous power, controls launcher power, enables strikedown and anti-icing, and provides the launcher hazard status to the combat systems maintenance control or damage control center. The status panel maintains communication with the remote launcher enable panel (RLEP) in CIC for remote control of the magazine power and launch enable. The panel also includes a relay that is controlled by the safety observer's safety switch during strikedown operations.

Remote Launch Enable Panel (RLEP)

The RLEP, located in CIC, interfaces with the status panel to provide control of the remote magazine power and remote launch enable signals to the launcher. The Mk 428 Mod 0 RLEP is a double panel with one side for the forward launcher and an identical side for the aft launcher. The Mk 441 Mod 0 and 1 RLEP is a single panel for controlling one VLS launcher.

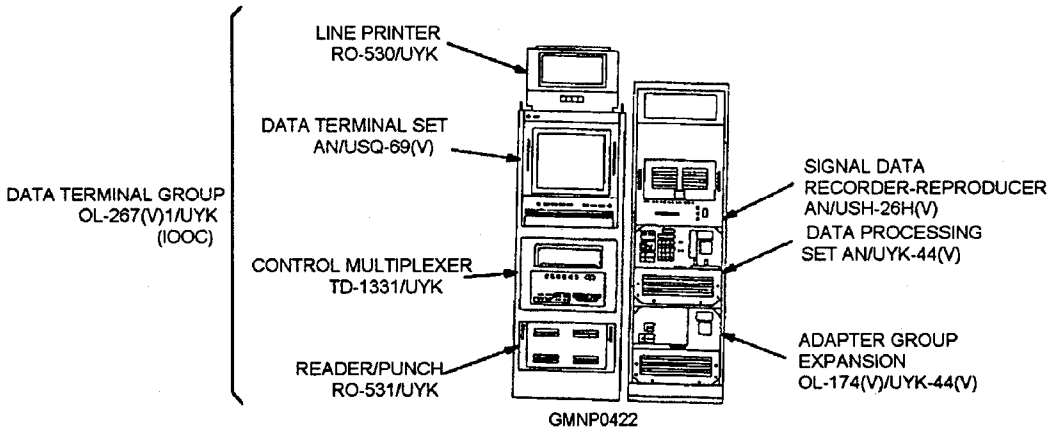

Figure 7-43.—Launcher Control Unit Mk 211 Mod 1.

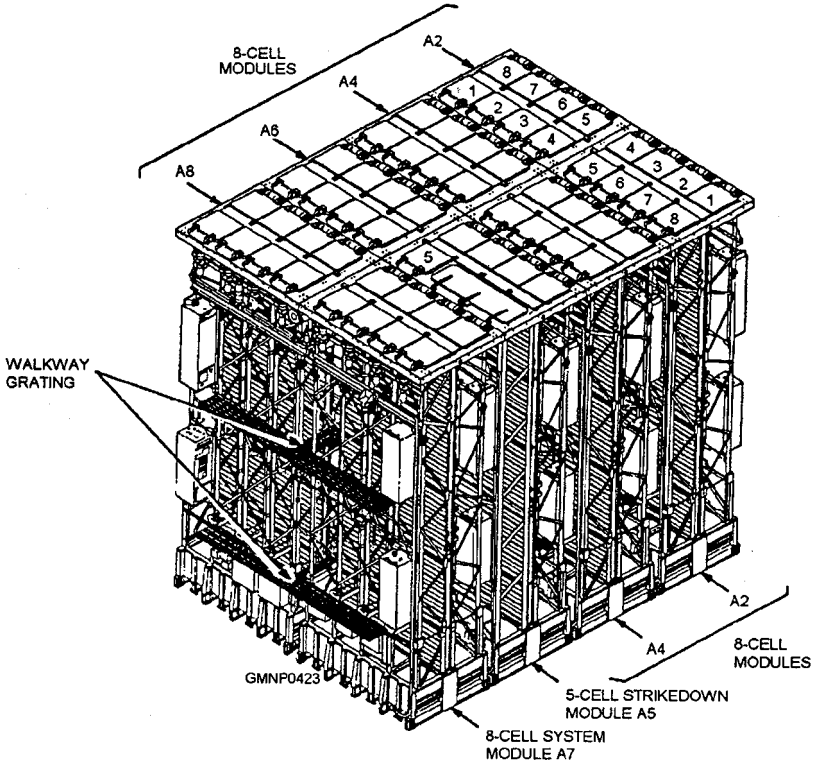

Figure 7-44.—Vertical Launcher Mk 158 Mod 0.

VERTICAL LAUNCHERS

There are two types of launchers associated with the VLS—the Mk 158 Mod 0, which is a 61-cell launcher, and the Mk 159 Mod 0, which is a 29-cell launcher (figs. 7-44 and 7-45). The launchers are housed in watertight compartments that extend vertically from the second platform to the 01 level in all three ship classes.

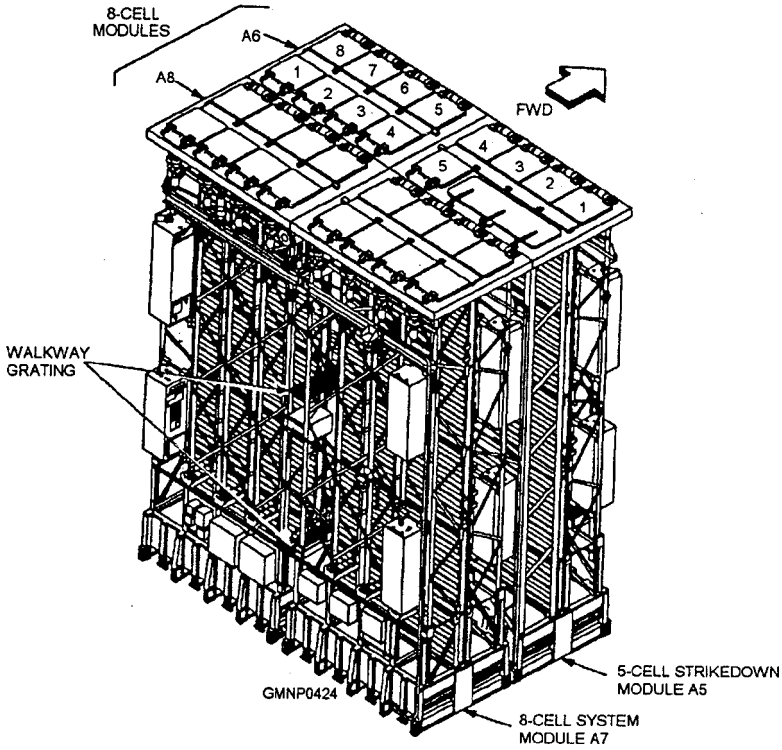

Figure 7-45.—Vertical Launcher Mk 159 Mod 0.

The module is the primary structure component of the VLS launcher (fig. 7-46). It consists of the deck structure, the intermediate structure, and the base structure.

On the 8-cell module, the deck structure consists of eight cell hatches and an uptake hatch. The deck structure provides ballistic protection and supports the upper ends of the canisters. The deck structure is part of the gas management system that prevents rocket motor exhaust gases from escaping into the open launcher area. All hatches (with the exception of the strikedown hatch) contain heating elements to prevent icing. The cell hatches and uptake hatches are automatically opened by individual drive motors before missile launch. After a 10-second delay, to permit venting of the remaining missile exhaust gases in the launcher cells, the cell hatches automatically close.

The intermediate structure forms the midsection of the module and is also a part of the gas management system. It consists of five uptake sections bolted together and the outboard structures. The uptake sections form a fluelike structure for venting missile exhaust gases. The outboard structures are bolted to the sides of the uptake sections that serve as canister guide rails for installation and removal of canisters.

The base structure serves as a base structure for the module and as a plenum for the gas management system. The intermediate structure mounts directly to the base structure for support of the module and canisters. The interior surface of the plenum and uptake are protected with ablative material to prevent the heat blast from overheating the VLS structure or ship structure.

The launcher sequencer, mounted to the module structure at cell 1, is the interface unit between the controlling LCU, other module equipment, and the missiles. The launcher sequencer monitors the status of the module and the cells within the module.

5-CELL STRIKEDOWN MODULE

The 5-Cell Strikedown Module Mk 3 Mod 0 (fig. 7-47) consists of the deck structure, the intermediate structure, the base structure, and the strikedown

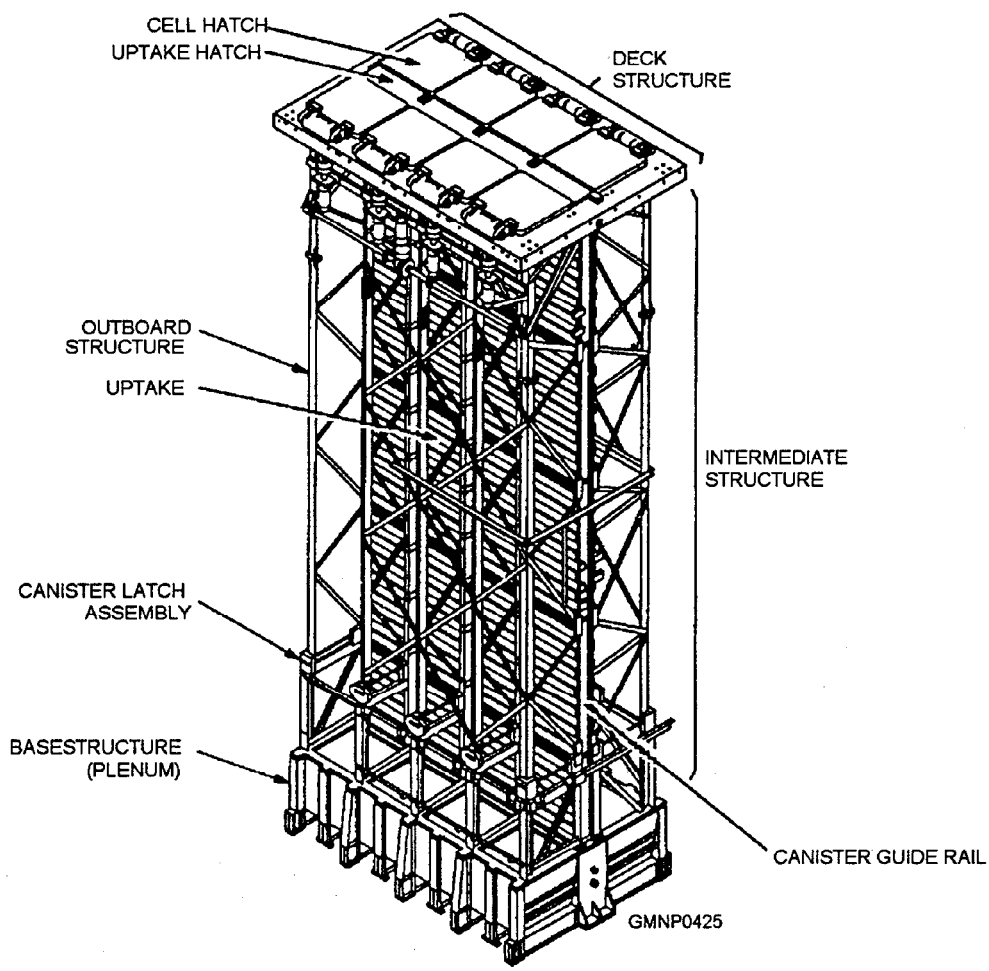

Figure 7-46.—Module structure.

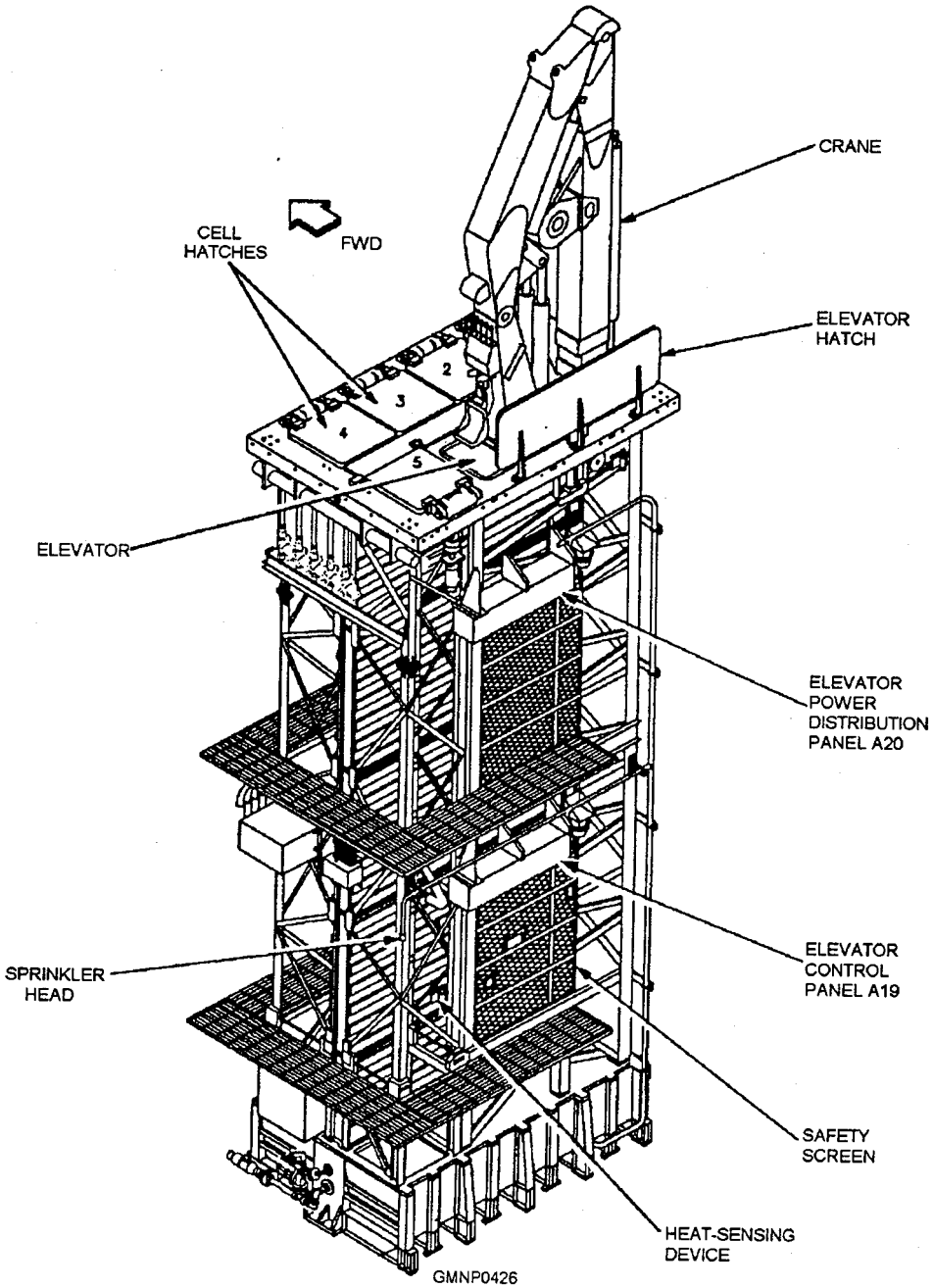

Figure 7-47.—5-Ce11 Strikedown Module Mk 3 Mod 0.

equipment. The major subassembliess are common to the 8-cell module.

The deck structure consists of 5-cell hatches, 1 uptake hatch, and 1 elevator hatch. The strikedown module related equipment is the same as that for the 8-cell modules, except the elevator hatch replaces cell hatches 6 through 8.

The intermediate structure is the same as that of the 8-cell module, except that the elevator extension structure is part of the outboard structure. The intermediate structure holds four cells on one side of the module—the fifth cell, the elevator, and the crane assembly are on the other side of the module.

The base structure is the same as that for the 8-celI module, except that the area containing cells 6 through 8 on an 8-cell module are replaced by the elevator and crane in the 5-cell strikedown module. There are no cell openings in the plenum at cells 6 through 8.

The strikedown equipment consists of a crane, an elevator, an elevator control panel, an elevator power distribution panel, and a junction box (see fig. 7-47). The crane is a hydraulic expendable boom that is stored

below deck. The elevator raises and lowers the crane on its platform by means of a three-stage telescoping hydraulic cylinder, controlled by the elevator control panel. The elevator power distribution panel and junction box provides 440 VAC, 60-Hz, three-phase power to the hydraulic power supply.

LAUNCHER SUPPORT EQUIPMENT

The vertical launcher support equipment consists of a sill adapter assembly, a canister adapter, and a plenum cell cover that are coated with a heat-absorbing ablative material that protects the equipment from heat damage.

The sill adapter assembly is an open, funnel-like, steel weldment assembly that provides the lower mating surface for the missile canisters. The sill assembly also directs missile exhaust away from the sides of the missile cell and into the plenum.

The canister adapter is a combination nozzle and spacer installed under the bottom of the canister to prevent rocket motor exhaust gases from circulating back into the canister. When used in an empty cell, the canister adapter holds the plenum cover at latching height.

The plenum cell cover is used with the canister adapter to seal cell openings when a canister is not in place. The cover also prevents gas from missile firings in that module from entering the empty cell.

GAS MANAGEMENT SYSTEM

The gas management system includes all the systems, assemblies, adapters, and covers that were discussed in the vertical launcher and launcher support equipment sections. The purpose of the gas management system is to direct exhaust gases from a missile firing to the external atmosphere.

Another part of gas management is the blowout system. It removes toxic fumes from the launcher by opening vent lines and activating the motor controller of the vent fan. After a missile firing, the blowout system must be operated for a minimum of 20 minutes before personnel enter the launcher and for 1 minute each hour thereafter that personnel remain in the launcher.

POWER DISTRIBUTION

The VLS power distribution consists of an ac power distribution system THAT applies 60-Hz, three-phase, 115 VAC and 440 VAC to the motor control panel (MCP), power distribution panels, system transformer platform, and module transformer platform. Dc power is produced within the MCP for equipment use outside of the MCP, such as prelaunch operations, hatch motors, and the Tomahawk missile prelaunch phase.

FAULT PROCESSING

Fault processing is the detection and reporting of faults within the VLS. This process can be accomplished by system level fault detection and reporting operations or local level built-in test equipment (BITE) tests.

System level BITE tests are conducted only when the VLS is in standby mode and LAUNCH ENABLE is not applied to the launcher. The LCU initiates a system level BITE test within approximately 30 seconds from the time the VLS is placed in the standby mode and every 2 hours thereafter. Other system BITE tests include the LCU, single module, system module, and deluge BITE tests.

SUMMARY

In this chapter we described the major GMLSs currently in the fleet, focusing on the major components, function, and operation. In subsequent chapters we will discuss their secondary and auxiliary equipment, guided missiles, ordnance handing equipment, and other maintenance requirements associated with the different types of GMLSs.

CHAPTER 8

GMLS: SECONDARY AND AUXILIARY FUNCTIONS

You should now have a pretty good understanding of the general physical arrangement and operational characteristics of the major guided-missile launching systems (GMLSs). The subject matter of this chapter will continue along those same lines. We will describe the secondary and auxiliary functions performed by the launching systems.

Secondary functions involve the equipments associated with guided-missile jettison and strikedown operations. Auxiliary functions cover a variety of equipment areas. We will only address the major types of fire suppression and environmental control systems. A brief section of general GMLS equipment safety precautions is presented at the end of the chapter. Pay close attention to the terminology used to describe each system.

NOTE

Throughout this chapter, as well as in other areas of this manual, certain equipment or system operating procedures will be presented. This is for general training purposes ONLY. The information presented should NOT be misinterpreted as the absolute step-by-step sequence of events in any case. ALWAYS refer to and use the applicable reference instructions (GMLS publications, maintenance requirement cards, ship doctrines, and so on) when dealing with actual operational procedures.

JETTISONING

LEARNING OBJECTIVES: State the purpose for missile jettisoning, and list the major components and operation of the dud-jettisoning assembly for the Mk 13 Mod 4 and Mk 26 GMLS.

Jettisoning, also known as dud jettisoning, is the act of clearing an unwanted missile from a launcher guide rail by ejecting it overboard. Whenever the firing key is closed, there is never a 100 percent guarantee that every missile will properly ignite and launch under its own power. A dud or misfire condition could exist that may lead to a potentially hazardous situation. Should the missile endanger the safety of the ship and its personnel or interfere with tactical operations, the order to jettison the round could be given. In some cases, however, after an appropriate waiting period, the missile may be safely returned to the magazine.

In any event, the final decision rests with the commanding officer. The orders to prepare to jettison and to actually jettison are relayed to GMLS personnel by the weapons control system (WCS). The launcher and jettison devices are readied for operation. Generally, a piston slowly extends out to contact the missile. The piston then ejects (or pushes) the missile over the side. The ejecting force is usually supplied by a high-pressure pneumatic source.

MK 13 MOD 4 GMLS JETTISON

The Mk 13 GMLS uses a jettison device (fig. 8-1) that is an integral part of the launcher guide arm. Components of the device are located within the forward part of the guide arm and the yoke. (Also see fig. 7-6.) The jettison device is essentially a high-pressure, hydropneumatic ram-type piston. Jettison operations may be performed in the remote, local, or exercise modes as selected by the EP2 panel operator.

Physical Description

The main jettison components in the guide arm are a piston, a beam, a track, two shafts, and a latch. The piston, working from hydraulic and nitrogen pressures, is the propelling force. In extending, the piston moves the beam and the two shafts, pushing the missile from the retractable rail. With the retractable rail retracted, a crossbar receiver on the beam engages the crossbar of the two shafts. The beam, attached to the forward end of the piston and riding on rollers, is guided onto the beam track. The shafts are two tubes that slide into

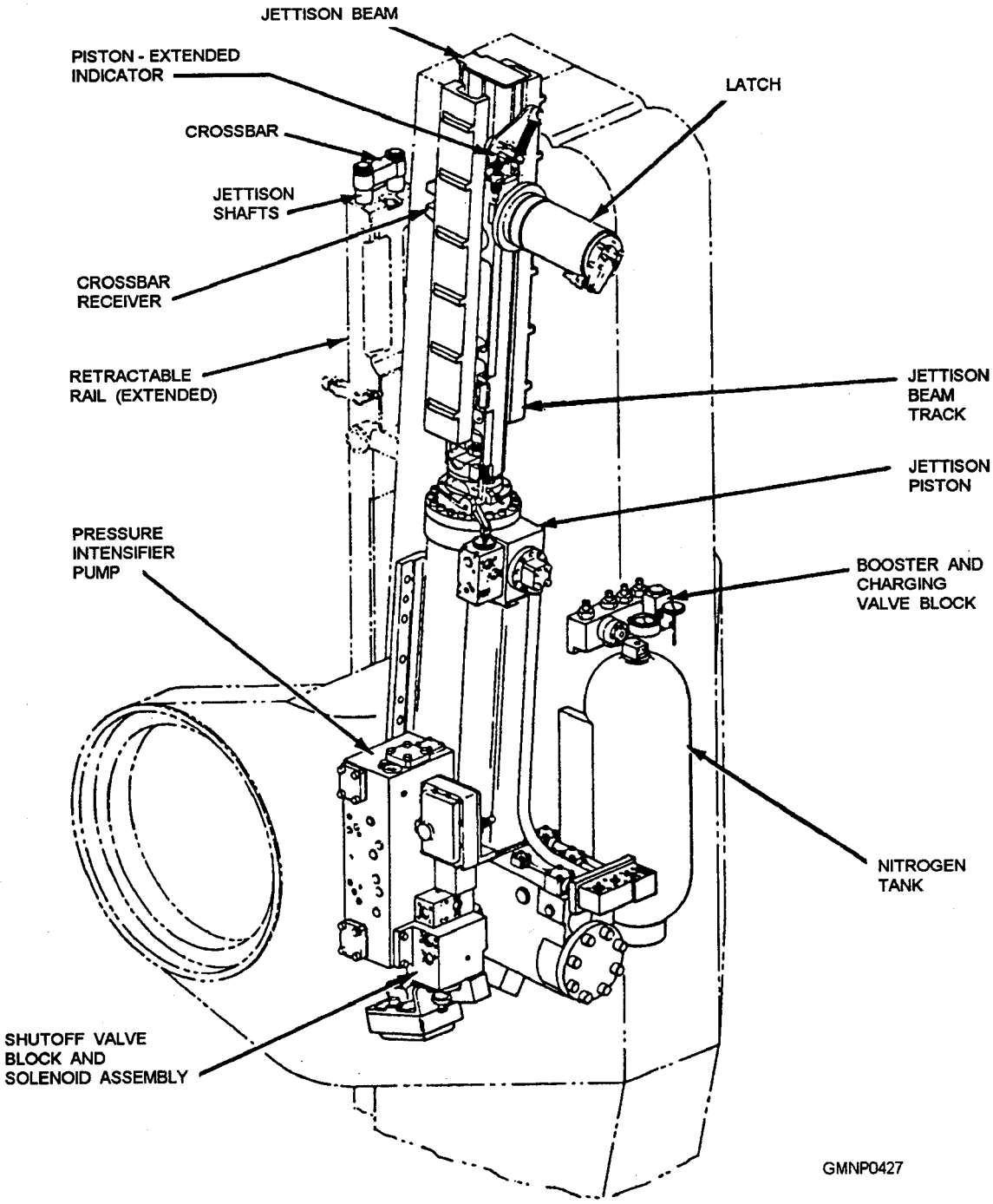

Figure 8-1.—Mk 13 Mod 4 GMLS jettison device.

bores within the retractable rail. The crossbar receiver engages the shafts and latches them to the beam. Two pawls below the shafts engage the missile forward shoe. The latch is a spring-loaded valve that extends its plunger into a recess of the beam. The latch locks the beam and jettison piston in their retracted positions.

Other jettison components are in the yoke section of the guide. They include a pressure intensifier pump, a nitrogen tank, and a booster and charging valve block. The pressure intensifier pump is a special pumping unit for boosting hydraulic pressure when retracting the jettison piston. The increased hydraulic pressure offsets the high nitrogen pressure used to extend the piston. Attached to the pressure intensifier pump is a shutoff valve block and solenoid assembly. It opens or closes the hydraulic fluid pressure line to the launcher guide components. The nitrogen tank is a steel flask charged with nitrogen. This pressurized gas extends the jettison piston at the velocity needed to eject a missile overboard. The booster and the charging valve block

are part of a hydropneumatic unit. This unit also contains a piston and shutoff valves. The valves are used to maintain the nitrogen supply and hydraulic pressure at the proper level for operating the jettison piston.

Portable nitrogen supply cylinders (bottles) and a nitrogen booster pump supply nitrogen to the tank. Supply cylinders normally are charged to only 1,800 psi. This is insufficient pressure to operate the jettison device safely. A manually operated nitrogen booster pump is, therefore, used to increase supply cylinder pressure. The pump increases nitrogen pressure to about 2,400 psi when the nitrogen tank is filled or recharged. The Mk 13 Mod 4 GMLS has a permanently installed unit in the inner magazine structure.

Functional Description

Functionally, the Mk 13 Mod 4 GMLS jettison device is a compact, simple, ready-to-use piece of equipment that is totally independent of the ship's HP air system.

JETTISON REMOTE.— When jettisoning is ordered, the launcher captain activates the REMOTE DUD JETTISON switch on the EP2 panel. Control system circuits automatically cause various guide arm components to set up for jettisoning. The fin opener arm assembly retracts. The forward-motion latch unlocks, and the arming device extends. As the retractable rail retracts, the crossbar between the jettison shafts enters the slot in the crossbar receiver. The guide arm is then mechanically prepared for the jettison operation.

The remote circuits also affect the launcher power drives. Train control is transferred from the fire control system (FCS) computer to synchros in the launching control system. Elevation control is switched to a remote FCS gyrocompass. In response, the launcher automatically moves to a jettison position that aims the missile seaward. Train bearing will be either directly port or starboard. It is controlled by stationary position orders from the digital director in the EP3 panel to the launcher synchros in the train and elevation receiver regulators. Elevation angle will be 36°40' relative to the horizon. As the ship rolls and pitches, gyrocompass signals will maintain the 36°40' elevation angle. This angle ensures the jettisoned missile will clear the ship.

Extend Jettison.— When the launcher synchronizes to a jettison position, the EP2 operator reports ready and awaits the final order. Pushing the DUD **JETTISON—** JETTISON push button on the EP2 initiates the extend and jettison cycles.

The extend dud-jettison solenoid is energized. Hydraulic fluid pressure (1,500-1,600 psi) from the launcher guide power unit is applied to the front of the jettison latch. However, at this time the latch cannot be retracted. That is because nitrogen pressure (at 2,400 psi) is constantly applied to the back of the jettison piston. This pressure forces the jettison beam forward (slightly) and places a bind on the latch. Thus normal hydraulic fluid pressure cannot overcome the higher nitrogen pressure. The jettison latch remains extended at this point in the extend sequence.

Hydraulic fluid is, therefore, ported around the latch. The fluid is directed to a pressure intensifier valve in the pressure intensifier pump. A pumping action takes place as this valve is made to shift rapidly back and forth. The principle behind this action involves the conversion of an applied pressure with great volume by a large area piston into a greater pressure with less volume by a smaller area piston. Hydraulic fluid pressure is, thus, intensified to more than 8,000 psi and is ported to the front of the jettison piston. Intensified fluid pressure overcomes the nitrogen pressure behind the piston. The jettison piston and beam retract slightly to release the bind on the latch. Normal hydraulic fluid pressure may then retract the jettison latch.

As the latch retracts, the output of the intensifier pump is isolated and stopped. Nitrogen pressure behind the jettison piston causes it to creep forward. Its speed is restricted by an orifice. Movement of the piston cams the two jettison pawls into contact with (behind) the forward missile shoe. The forward-motion latch is displaced, and valves are shifted to remove creep control. The piston accelerates and propels the missile seaward.

At the end of piston travel, a buffering action takes place to slow and stop the piston and beam. Also, an interlock switch is actuated to provide the launcher captain with an EXTENDED lamp indication.

Retract Jettison.— After the extended lamp lights, the launcher captain pushes the DUD JETTISON RETRACT push button. A solenoid energizes to activate the intensifier pump once again. A retract cycle requires a large volume of hydraulic fluid. A special isolation valve provides this large supply by closing and isolating hydraulic fluid from the other components of the guide arm. This action is necessary to prevent these

components from reducing the volume of fluid available to the intensifier pump.

Intensified hydraulic fluid is then applied to the front of the extended piston. As the jettison piston and beam retract, nitrogen is forced back into the nitrogen tank. In approximately 15 seconds, the piston reaches its fully retracted position. The latch engages the beam and activates an interlock switch. The control system indicates RETRACTED.

The isolation valve shifts to make hydraulic fluid available to the other guide components. The forward-motion latch locks, and the arming device retracts. The retractable rail reextends; the launcher slews to the load position, ready for future operations.

JETTISON LOCAL.— If the remote elevation order signal is not available from the FCS gyrocompass, the launcher captain switches to LOCAL DUD JETTISON. Fixed position synchros in the EP2 then supply the elevation signal. Ship roll compensation consists of the launcher captain watching a clinometer bubble. The jettison operation is timed to coincide with a down roll. All other operations are the same.

JETTISON EXERCISE.— For maintenance testing, the EP2 operator shifts the system to the STEP-EXERCISE mode. Step push buttons must be activated to extend the arming device and retract the retractable rail.

With the guide arm empty, the rail-loaded indicator plunger and a hydraulic valve are extended. The extended valve ports hydraulic fluid to a throttle valve. This valve restricts the flow of hydraulic fluid to the jettison piston and limits the speed of piston travel. The reduced speed prevents equipment damage that would occur under a no-load condition. Retraction of the jettison piston in the exercise cycle is the same as that in an actual jettison operation.

MK 26 GMLS JETTISON

The Mk 26 GMLS has two jettison devices. They are deck-mounted at an angle to the launcher platform at the A and B dud-jettison positions. The two units are hydromechanically extended and retracted. They use an explosive gas generator to provide the ejecting force. Both the missile and an expendable piston assembly jettison over the side. Jettison operations start with a preparatory order from the ship's combat system (SCS). The main control console (MCC) operator in the integrated control station (ICS) controls all subsequent actions. The jettison devices of the various Mk 26 GMLS mods are identical.

Physical Description

Above the deck, the jettison mounting bracket supports, encloses, and protects the upper jettison components (fig. 8-2). Anti-icing fluid is circulated around the expendable piston cap to prevent ice buildup. A locking post and screw secure the gas generator cover to the bracket.

Below the deck, the 4-foot jettison housing cylinder contains the extender mechanism and the expendable piston assembly. The upper end of the cylinder is thicker than the lower end. It must be thicker to withstand the explosive force developed by the gas generator. A motor housing is bolted to the back of the cylinder. It contains a small bidirectional hydraulic motor that is controlled by a solenoid valve assembly.

The extender mechanism consists of an extender screw, extender nut, and extender sleeve. The extender screw is coupled to the output shaft of the hydraulic motor. The extender nut is threaded onto the screw and bolted to the extender sleeve. The extender screw is rotated counterclockwise (to extend) or clockwise (to retract) by the motor. The extender nut and sleeve (with the expendable piston assembly) travel out or in on the threads of the screw.

The extender sleeve serves as the barrel for the expendable piston assembly. A key and keyway prevent the sleeve from turning as the mechanism is extending or retracting. Gas ports in the aft section of the sleeve permit expanding gases from the fired gas generator to enter the sleeve. Gas pressure falls the sleeve up to the expendable piston. Only the piston assembly is propelled overboard.

The expendable piston assembly weighs about 75 pounds and fits inside the extender sleeve. A split lock ring is bolted to the piston cap. It attaches the cap to the piston sleeve and the piston assembly to the extender sleeve. A piston plug is inside the piston sleeve. It serves as a guide for the positioner rod of the safety mechanism. The piston plug is also a header for the expanding gas pressure.

The gas generator contains an electrically ignited explosive charge. When the generator is fired, expanding gases propel the piston assembly and a missile from the guide rail. The generator is a one-shot device that must be replaced after each firing.

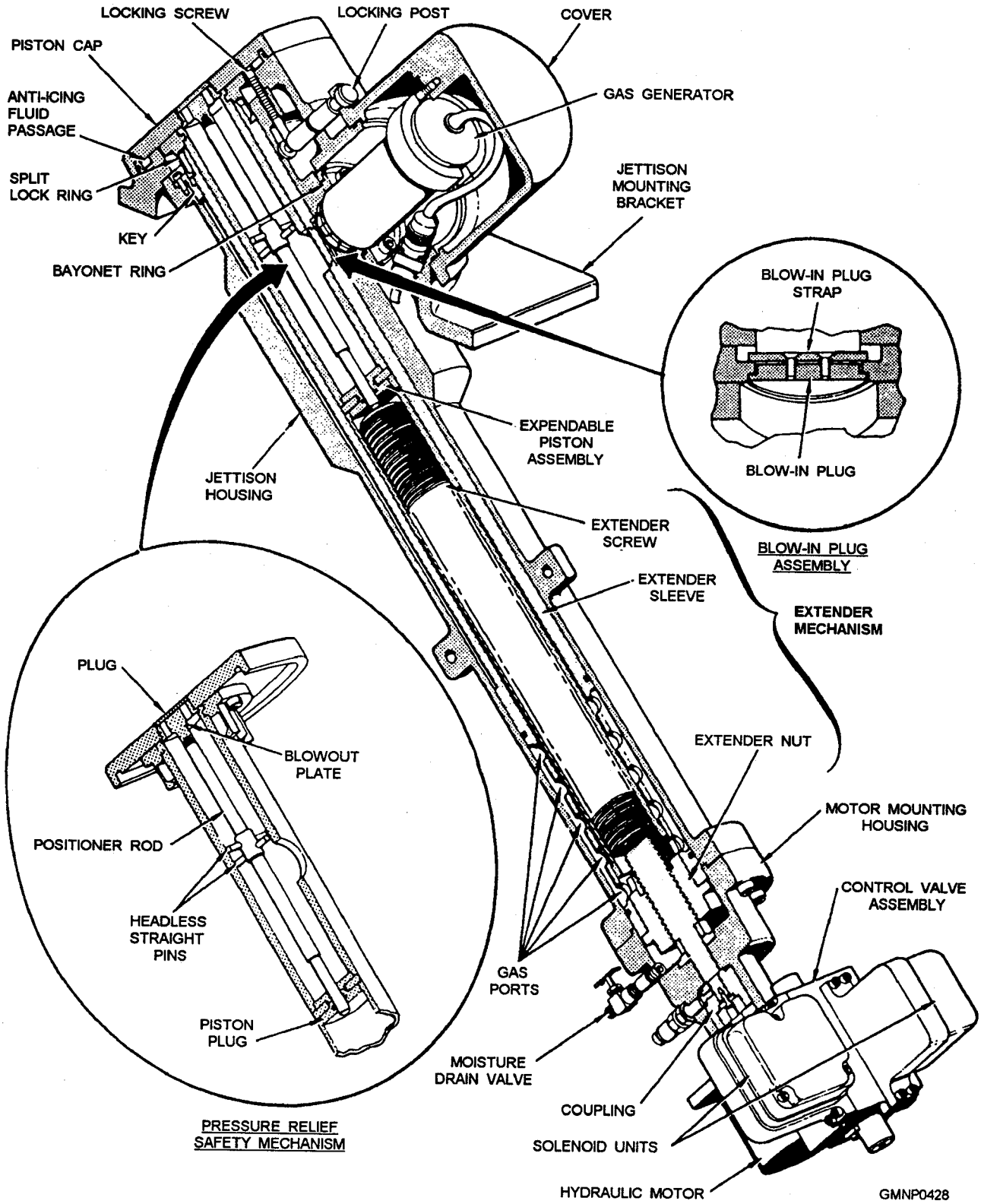

Figure 8-2.—Mk 26 GMLS jettison device.

What if a gas generator accidentally fired while the jettison device was retracted? A pressure safety relief mechanism is built into the unit. Components of the mechanism will safely vent the expanding gases to the atmosphere. They also prevent the piston and other metal pieces from ejecting outward.

When the extender sleeve is retracted, a blow-in plug assembly in the wall of the sleeve aligns under the

gas generator. The assembly is designed to collapse into the forward chamber of the expendable piston. Gas pressures act only on the front side of the piston plug. That keeps the piston assembly inside the extender sleeve.

Two headless straight pins are staked at right angles to the center of the positioner rod. They serve as a capture cage for pieces of the blow-in plug assembly. A rupture disc (or plug) is in the center of the piston cap. It breaks (from internal pressure) and allows the gases to escape. Normally intact, the ruptured disc keeps moisture out of the jettison device.

Functional Description

When ordered to prepare for jettison operations, the MCC operator presses the RSR/RAIL SELECTION-A or -B and POINTING SELECTION-JETTISON push buttons. Automatically, the launcher slews to the correct position and readies itself for jettisoning. For an antiair warfare (AAW) missile, the AAW arming device disarms. The two firing contractors and the AAW contactor retract. For an antisubmarine warfare (ASW) missile, the ASW contactor retracts. The retractable rail extends, and the ASW fire through latch unlocks.

EXTEND JETTISON DEVICE.— As the launcher synchronizes to the jettison position and the guide arm components are correctly positioned, jettison device operations begin. Jettison control circuits automatically energize control valve solenoids. The solenoids start the hydraulic-mechanical actions to extend the extender sleeve and piston. When the sleeve leaves its retracted position, the train and elevation power-drive brakes set. They hold the launcher aligned to the jettison position. The extender mechanism drives the expendable piston to within one-half inch of the tail cone of the missile and stops (fully extended).

JETTISON FIRING.— With all jettison circuit interlocks satisfied, a ready-to-jettison indication is given on the MCC. When the jettison order is received, the operator depresses the JETTISON FIRE push button. The firing circuits apply 20 VAC to the gas generator squibs. The generator ignites and jettisons the missile and expendable piston assembly.

RETRACT JETTISON DEVICE.— The MCC operator starts retract operations by depressing the JETTISON DEVICE-RETRACT push button. The extender mechanism returns the sleeve to its retracted position. When the sleeve is fully retracted, control system circuits automatically release the train and elevation power drive brakes. The ASW or AAW aft shoe latch retracts. The AAW rail segments also retract to clear the guide arm for the next missile. The MCC operator may return the system to normal operation.

Jettison operations are usually performed in the auto-load mode. For maintenance purposes, the step-load mode is used. All component operations must be initiated manually. The firing circuit to the gas generator may be checked but the unit is not ignited. The gas generator is classed as a high-explosive hazard. Handling and stowing procedures are conducted within strict adherence to applicable safety regulations.

STRIKEDOWN

LEARNING OBJECTIVES: Identify the major components of the major GMLS systems, and describe the operational procedures for strikedown of these systems.

Strikedown is a term associated with special GMLS equipments, operational procedures, and modes of system control. They are used during a missile onload or missile offload process. An ondoad operation transfers missiles from an outside source into the missile magazine. An offload operation is just the opposite.

Strikedown, for our purposes, is strictly an in-house GMLS operation. How a missile is transferred between a supplying activity and a receiving activity comes under the topic of replenishment. As GMs, we are generally not responsible for the actual replenishment actions. However, we must be aware of the basic procedures. Our main task is to move the missile between the ship's replenishment area and the GMLS strikedown area safely.

Guided-missile replenishment can be performed in various ways. Underway replenishment (UNREP) can be in the form of a connected replenishment (CONREP) or a vertical replenishment (VERTREP). For CONREP, missiles are moved between ships on appropriate riggings or highlines. For VERTREP, a helicopter is used to deliver/remove missiles from the ship. VERTREP may also be performed while the ship is at anchorage and, in some rare cases, pierside. A crane is used during dockside or lighter replenishment. (A lighter is an ammunition barge.) The crane is the simplest of replenishment methods. We will examine replenishment methods in greater detail later. For now,

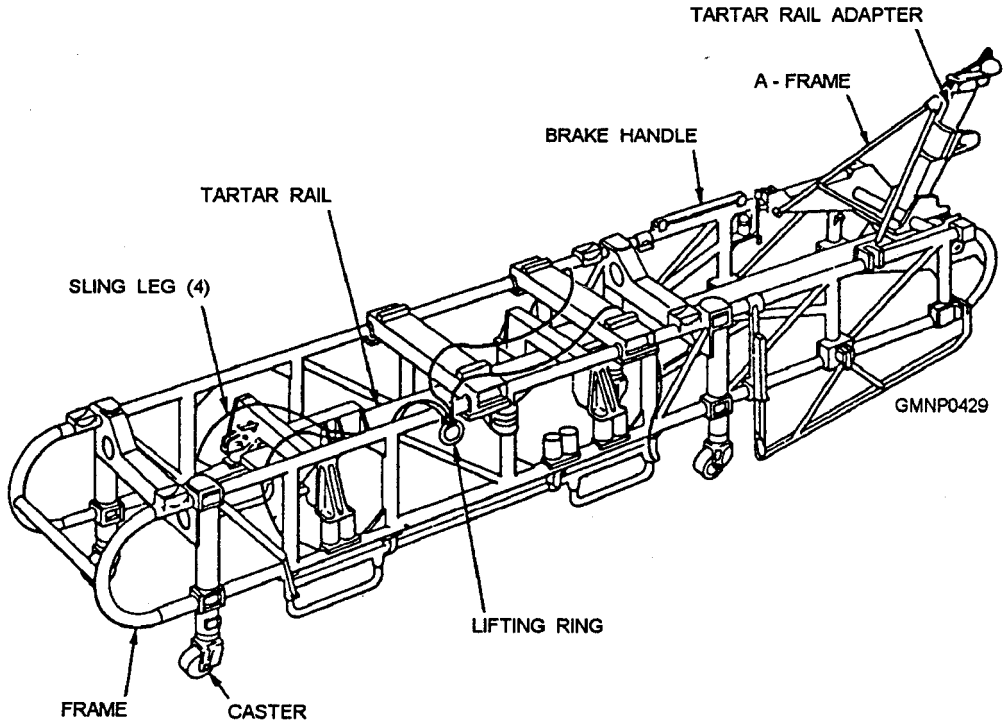

Figure 8-3.—Transfer dolly.

we will stay with the strikedown operations performed by the GMLSs.

MK 13 MOD 4 GMLS STRIKEDOWN

The strikedown onload and offload operations of the Mk 13 Mod 4 GMLS require special strikedown handling equipment, which must be installed on the launcher. This equipment provides a pneumatically driven chain mechanism to transfer the missile between the guide arm and transfer dolly (fig. 8-3). Figure 8-4 shows a Mk 13 Mod 4 strikedown operation with strikedown handling equipment installed.

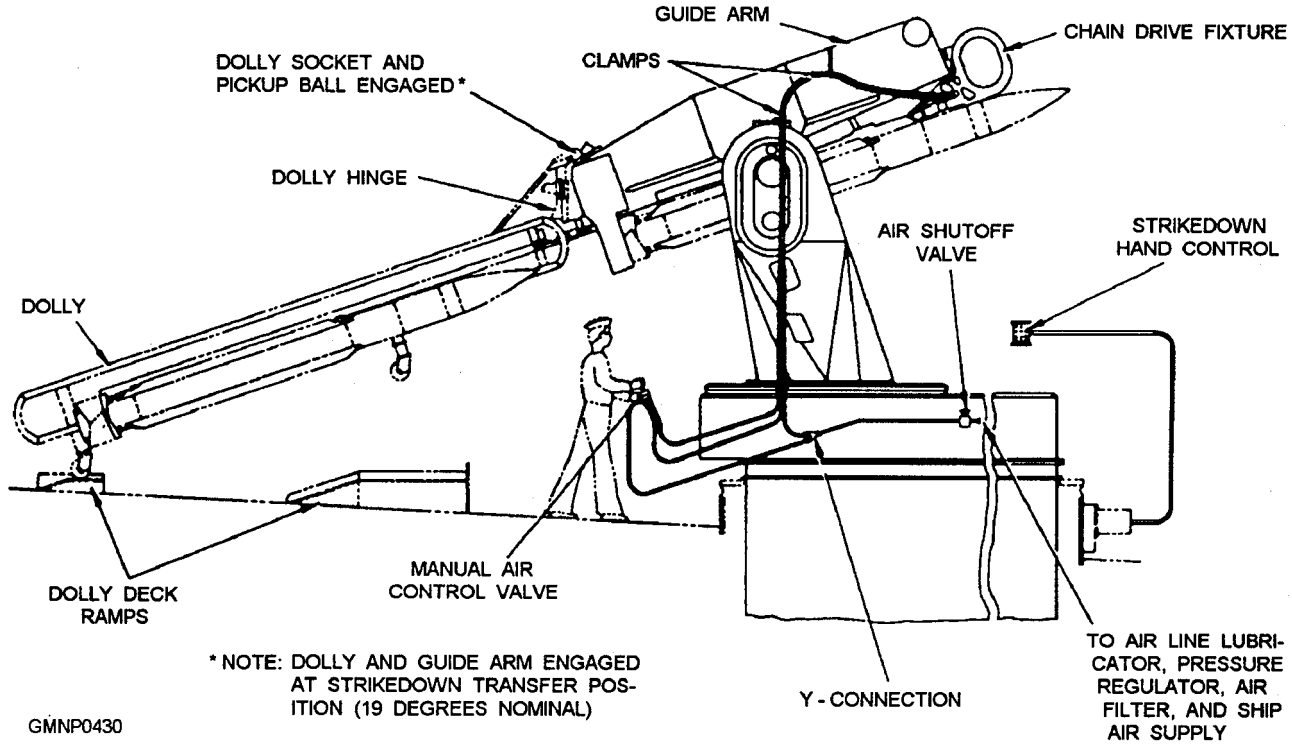

Figure 8-4.—Mk 13 Mod 4 GMLS strikedown operations.

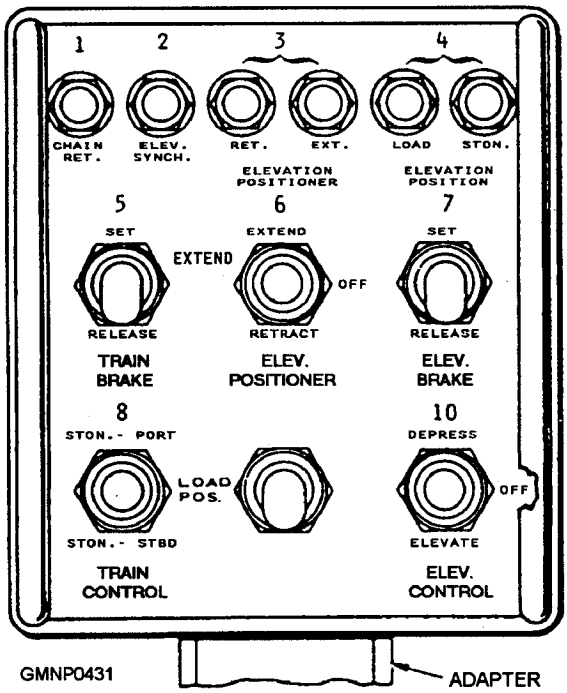

Figure 8-5.—Typical strikedown hand-control unit.

Transfer dolly handling and most launcher and guide arm component movements are initiated and controlled by system personnel topside.

Strikedown Gear

The special Mk 13 Mod 4 GMLS strikedown gear consists of a hand-control unit, a chain-drive fixture, and air supply components. This gear is stowed near the launcher area and must be set up before onload operations begin. Strikedown air originates from the ship's HP air system. At the GMLS, HP air is reduced and regulated to the low-pressure requirements (about 100 psi) of the equipment. This arrangement provides the strikedown gear with sufficient operating volume and pressure. In the following discussion, we will call this reduced HP air "supply air."

STRIKEDOWN HAND CONTROL.— The strikedown hand-control unit is a hand-held portable switch box. It is sometimes referred to as the deck control box. The operator of this unit can control train and elevation launcher movements, the elevation positioner (latch), and both power-drive brakes.

The box has six toggle switches (five are functional) and six indicating lamps. A detachable cable connects the box to the strikedown jack receptacle of the GMLS. The receptacle is mounted on the stand or on a bulkhead outside the launcher control room. (Location varies between mark and mod of GMLS.) Figure 8-5 shows a typical hand-control unit. Note what functions are controlled and indicated by the switches and lamps.

CHAIN-DRIVE FIXTURE.— The chain-drive (or strikedown) fixture is shown in figure 8-6. It is installed and locked to the front of the guide by two

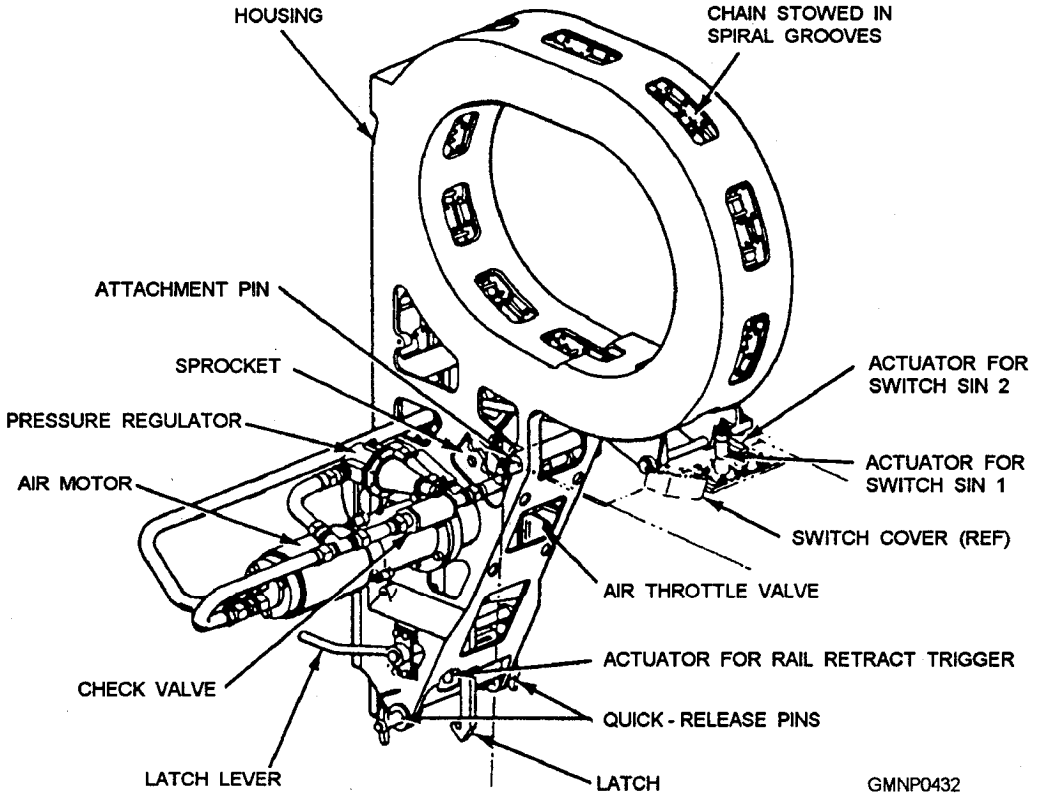

Figure 8-6.—Chain-drive fixture.

quick-release pins. Probes on the fixture actuate a strikedown-fixture-on-launcher interlock switch and deflect the retractable rail trigger. That prevents any interference between the trigger and the strikedown chain.

The link-type chain is guided by the forward shoe tracks of the retractable rail. A pair of spring-loaded latches on the forward end of the chain engage the forward missile shoe. An air motor on the fixture drives the chain through a simple gear reduction and sprocket mechanism. As the chain is made to extend or retract, it pulls the missile up to the guide arm or lowers it to the dolly.

Air motor operation is controlled by a pressure-regulating valve and an air-throttle valve. Both components are mounted on the chain-drive fixture. The pressure regulator reduces supply air to about 20-25 psi for a chain extend cycle. This low pressure drives the air motor at a slow extend speed. It also prevents the chain links from buckling when the latches engage the missile shoe. The air-throttle valve serves two purposes. First, it functions as a directional valve controlling the direction of motor rotation. Second, it controls the speed of chain travel near its extended and retracted limits. The valve throttles or reduces the air pressure available to the drive motor.

MANUAL AIR-CONTROL VALVE.— The manual air-control valve is a three-position, hand-operated valve (see fig. 8-4). Air line hoses connect it to a convenient ship supply air source near the launcher. Other hoses connect it to the pneumatic components on the chain-drive fixture.

The air-control valve is used to start, stop, and select the direction of chain travel. When the valve is in the NEUTRAL position, supply air is isolated from the drive fixture to stop the chain. When the valve is in the EXTEND or RETRACT position, supply air is ported to shift the air-throttle valve appropriately.

Strikedown Preparations

The EP2 panel must be activated to prepare for an onload operation. The launcher is moved to and secured at a convenient location to install the strikedown gear. Additionally, the launcher rail must be extended, the arming device retracted (disarmed), and the aft-motion latch retracted.

After the chain-drive fixture and the supply air hoses are attached, the EP2 operator activates the system and (carefully) returns the launcher to a LOAD position. The GMLS is secured once more. Topside, the deck control box is connected to its receptacle. The EP2 operator activates the GMLS, selects step control and strikedown, and retracts the train positioner. All subsequent launcher movements are controlled by the deck control box operator.

Strikedown Onload Operations

As the loaded transfer dolly arrives on board, the deck control operator assumes control. The train brake is released, and the strikedown port (or starboard) train control is selected. Fixed-position synchros drive the launcher to the predetermined strikedown position. When the launcher arrives at the strikedown position, the operator resets the train brake.

When ready to engage the dolly, the operator retracts and releases the elevation positioner and brake. The guide slowly depresses from the 90 degree load position when the elevation control switch is actuated. The guide mates with and picks up the dolly. The guide continues to depress until the elevation strikedown angle is reached. The operator resets the elevation brake and extends the positioner. Chain-drive operations can then begin.

EXTEND CHAIN.— The manual air-control valve handle is turned to EXTEND. This ports supply air to shift the air-throttle valve. From the air-throttle valve and the pressure regulator, 20-25 psi air causes the air motor to extend the chain slowly. The chain travels the length of the retractable rail of the launcher. It also extends along a portion of the guide rail of the dolly to reach the forward missile shoe.

Near the end of the chain travel, a cam on one of the chain links contacts and shifts linkage connected to the air-throttle valve. The main air port of the valve closes. However, through a restricting orifice, supply air continues to reach the motor. As a result, chain-drive speed is reduced even further. When the latches of the chain engage the forward missile shoe, chain movement stops. The air-control valve handle is returned to its NEUTRAL position.

System personnel visually verify that the spring-loaded chain latches have fully engaged behind the forward shoe of the missile. If the latches are only partially engaged, the missile may break loose as the strikedown chain is retracted. The missile will slide down the rail, shear off the shoe plate on the dolly, and drop on deck. Do not even hang around to explain that one to the chief!

RETRACT CHAIN.— To move the missile onto the guide, system personnel must shift the manual air-control valve handle to RETRACT. Full supply air pressure drives the motor at this time, and the missile is pulled onto the guide arm. As the aft shoe of the missile nears the forward-motion latch in the guide, another chain cam shifts the air-throttle valve. An orifice restricts air flow to slow motor speed again. Movement stops when the aft shoe of the missile contacts the forward-motion latch. The aft-motion latch automatically extends behind the aft shoe, and the manual air-control valve handle is turned to NEUTRAL.

After verifying that the aft-motion latch has fully extended, system personnel release the two chain latches. That is done by depressing a latch lever. See figure 8-6. The manual air-control valve handle is turned to RETRACT again. The chain is returned to its stowed position in the fixture. The manual air-control valve handle is placed in NEUTRAL to conclude air-drive operations.

Return Launcher to Load

The EP2 operator is instructed to select the unload mode. An empty cell in the ready service ring (RSR) is indexed to the hoist station. The deck control operator releases and retracts the elevation brake and positioner. The guide is elevated slowly to the 90 degree load/unload position, disconnecting from the dolly as it travels. When the dolly is rolled clear, the deck control operator releases the train brake. The launcher slews to align with the blast door.

The EP2 operator takes control and proceeds with normal unload operations. The identification probe of the fin opener arm assembly must be extended to identify the missile type on the guide arm. If strikedown operations are completed, the deck control box is disconnected and replaced by a dummy plug. This device restores full GMLS control to the EP2 panel. The launcher is moved to a convenient location for removal of the strikedown gear.

Strikedown Offload Operations

Strikedown offload operations are basically the reverse of onload operations. The one difference concerns the aft-motion latch of the guide arm. Control system circuits normally prevent the aft-motion latch from retracting with a missile on the rail unless the hoist pawl is extended and engaged.

During a strikedown offload operation, the aft-motion latch is retracted with a special tool inserted into a slot on the fixed rail. The tool is turned manually to simulate the presence of the hoist pawl. The EP2 operator may then retract the aft-motion latch. The missile can then be lowered onto the transfer dolly.

MK 26 GMLS STRIKEDOWN/ INTERTRANSFER

The Mk 26 GMLS strikedown/intertransfer system is used for strikedown onloads and offloads. It is also used for intertransfer movement of missiles between RSRs. The Mk 26 GMLS is adaptable to all standard replenishment methods.

The strikedown/intertransfer system can be divided into two primary equipment areas. The strikedown/ intertransfer mechanism is the main component of the system. It functions above and below deck. Components on the strikedown end of the RSRs work with this mechanism in transferring missiles. The other equipment area involves the portable, on-deck handling equipments. Different equipments are used for AAW and ASW rounds.

Strikedown/Intertransfer Mechanism

The strikedown/intertransfer mechanism moves the missiles between the deck and magazine and from RSR to RSR. The mechanism consists of six major assemblies, as shown in figure 8-7.

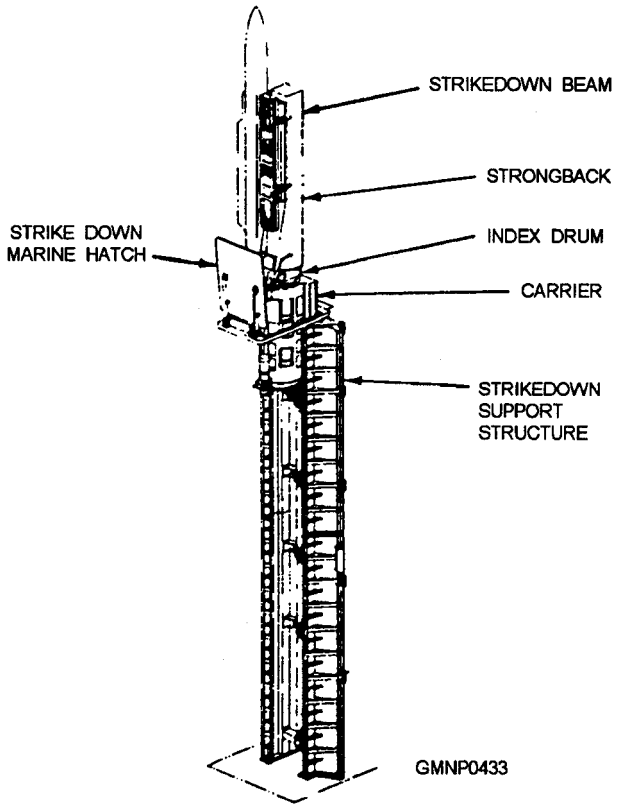

Figure 8-7.—Mk 26 GMLS strikedown/intertransfer mechanism.

The strikedown support structure mounts the equipment used to raise and lower the carrier assembly. The carrier assembly rides up and down on guide rails, and it is moved by a threaded screw shaft. The shaft is rotated by a small hydraulic motor.

The index drum is a major subassembly of the carrier. It is mounted on top of the carrier and supports the strikedown beam assembly. Hydraulic components of the index drum serve to position the strikedown beam. When the carrier assembly is in the magazine, the index drum can be rotated 60° on either side of the centerline. This rotation aligns the strikedown be am to the A-RSR or the B-RSR. When the carrier assembly is raised to deck level, the index drum can be rotated 80° on either side of the centerline. This rotation aligns the strikedown beam to the A-receiver or B-receiver positions on deck. At all five positions, the index drum is latched in place.

Components within the index drum also elevate and depress the strikedown beam. The strikedown beam is hinged to the index drum. The beam is depressed to horizontal to pickup a missile from or deliver it to the on-deck handling equipment. It is elevated to vertical and latched to ride up and down the support structure.

A strongback assembly (fig. 8-8) hangs from the strikedown beam. It is used to secure a missile to or

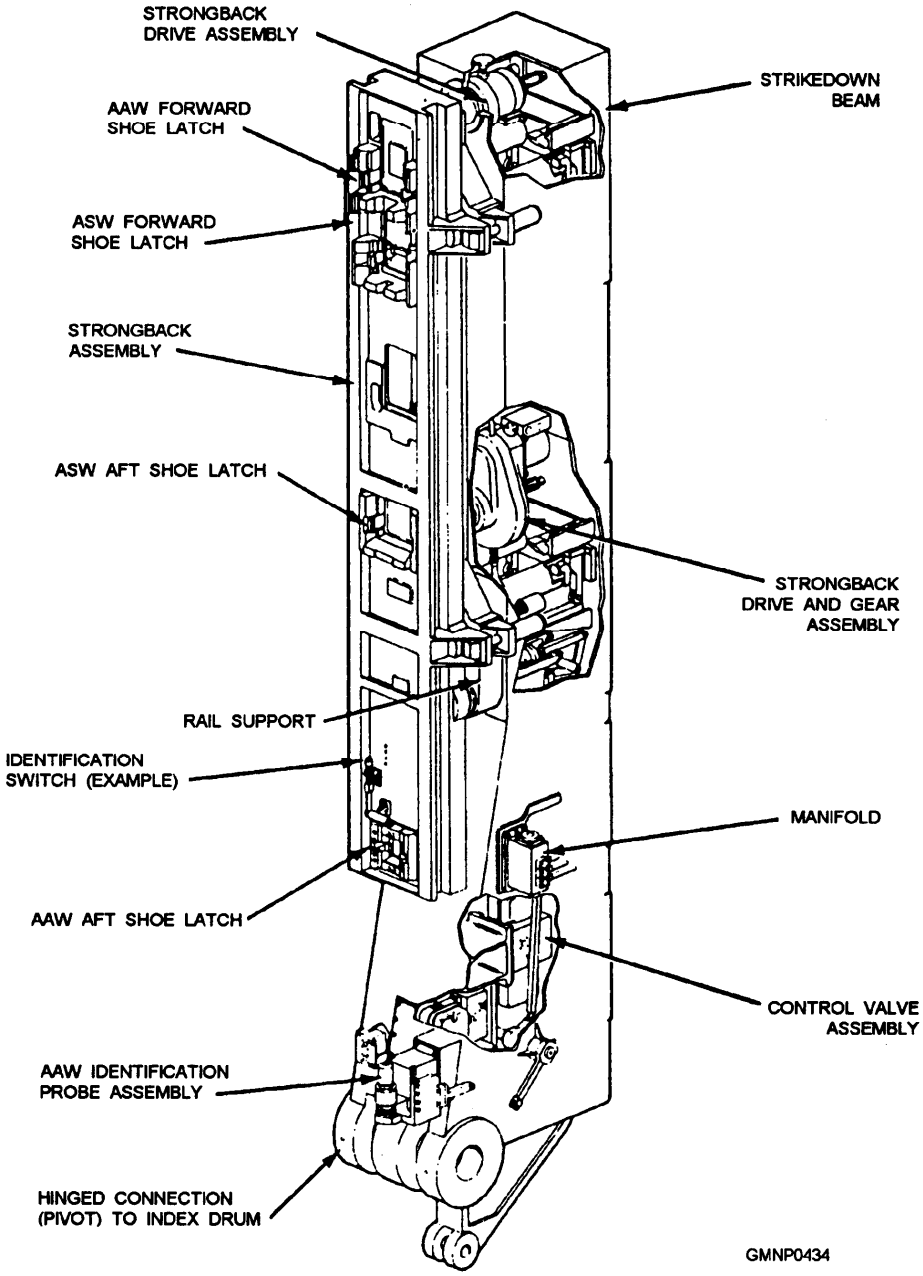

Figure 8-8.—Strikedown beam and strongback assemblies.

release it from the beam. The strongback is capable of extending and retracting at both the vertical and horizontal positions. Four separate openings in the strongback accept the forward and aft shoes of the AAW and ASW missiles. Shoe latches within these openings secure the missile to the strongback.

When the strikedown beam is horizontal, the extended strongback is capable of some small vertical and lateral movements. The mobility of the extended strongback enables it to align itself to the missile shoes. When the strikedown beam is vertical, the extended strongback is only allowed a small lateral movement. When the strongback is fully retracted to the beam, it is latched securely in place.

The strikedown beam also serves to identify the missiles to the control system. The identification takes place through various proximity switches and an AAW identification probe. Missile group and type information is sent to the ICS even before the missile is lowered to the magazine.

The strikedown marine hatch (refer to fig. 8-7) is the last major component of the strikedown/intertransfer mechanism. The hatch is hydraulically opened and closed by the MCC operator. A strikedown control panel is mounted to the underside of the hatch. When the hatch is opened for strikedown operations, the panel is exposed. This panel permits local control of the strikedown operations performed on deck. Note the functions of the switches and lamps of the panel, as shown in figure 8-9.

The strikedown/intertransfer mechanism receives its hydraulic fluid supply from either the A- or B-RSR/hoist power-drive accumulator system. A manual transfer valve is positioned to select A-side or B-side supplies. The fluid from one system is not allowed to intermix with the other.

On-Deck Strikedown Equipment

The Mk 26 GMLS uses a variety of special on-deck handling equipments. They correctly align and position AAW or ASW missiles to the strongback of the strikedown beam.

Mounted flush in the strikedown area deck are two piston assemblies. They are located about 80° on either side of the strikedown beam centerline. One is for A-side operations, and one is for B-side operations. These piston assemblies are known as the receiver or positioner pistons. They also receive hydraulic fluid supply from the selected RSR/hoist accumulator system. The receiver pistons serve to raise and lower the missile between the deck and extended strongback. This operation is controlled by the on-deck strikedown control panel operator.

AAW HANDLING EQUIPMENT.— AAW-type missiles are shipped to a Mk 26 GMLS in the same transfer dolly used by other Tartar systems. But here any similarity ends. To orient an AAW missile to the strikedown beam properly, the Mk 26 GMLS uses two special devices: the AAW dolly deck track and the AAW missile receiver beam. These portable equipments are used to transfer a missile between a transfer dolly and the strikedown mechanism.

AAW Dolly Deck Track.— The AAW dolly deck track is shown in figure 8-10. It serves to guide and secure a transfer dolly over the in-deck receiver piston. When the dolly arrives on deck, it is pushed up the wheel ramps and guided along the long deck track channel. The dolly is locked in place by forward and aft wheel stops (pins).

Two alignment lever handles are used to shift the track and dolly laterally. This action aids in aligning the shoes of the missile to the AAW receiver beam.

AAW Receiver Beam.— The AAW missile receiver beam is shown in figure 8-11. It is used to transfer the missile between the transfer dolly and the strikedown beam. The beam is connected and secured to the receiver piston. It is allowed some "floating" movement to aid in missile alignment.

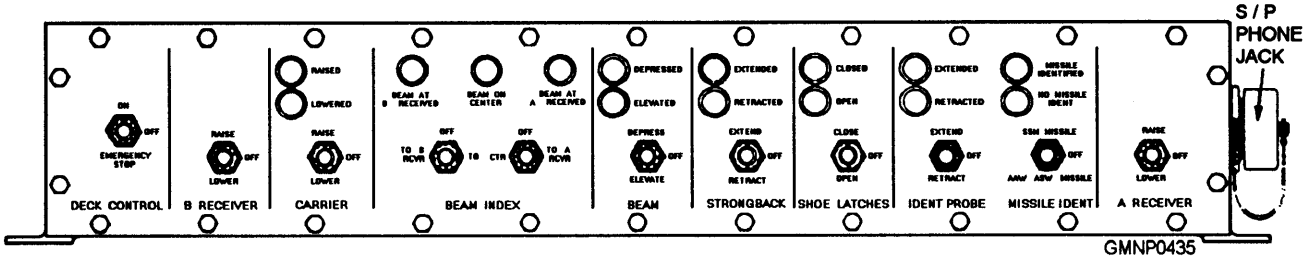

Figure 8-9.—On-deck strikedown control panel; front panel.

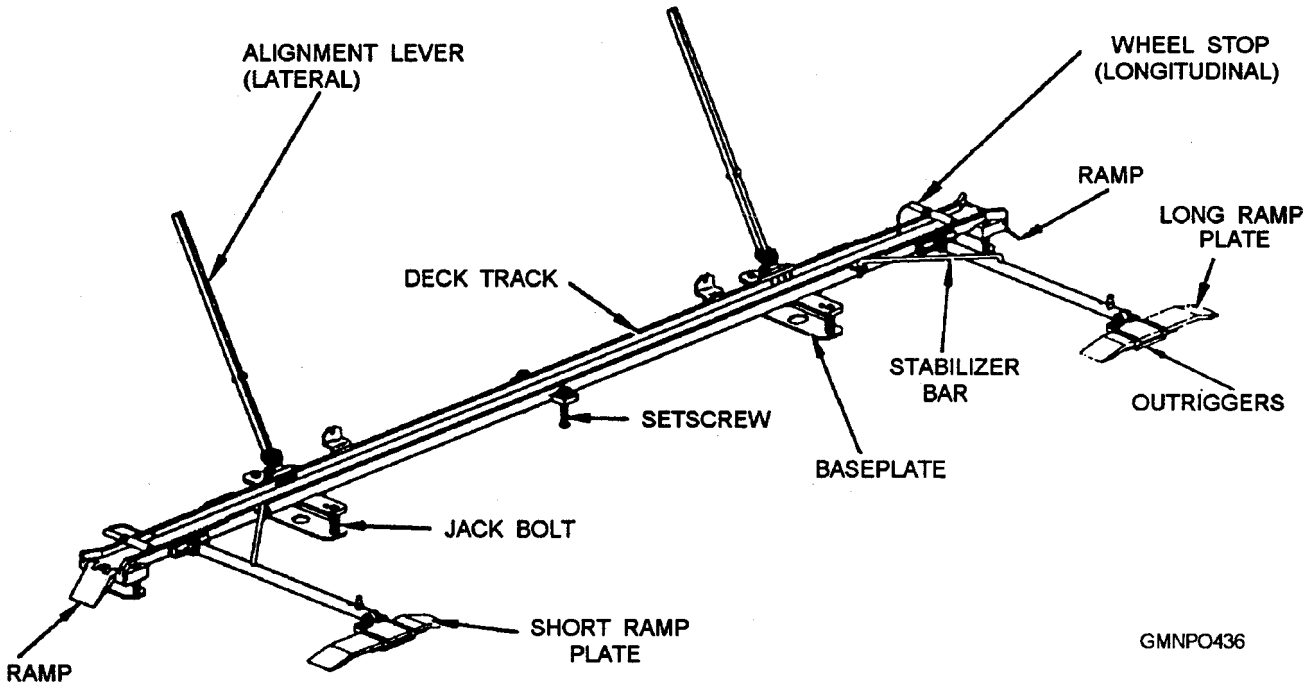

Figure 8-10.—AAW dolly deck track.

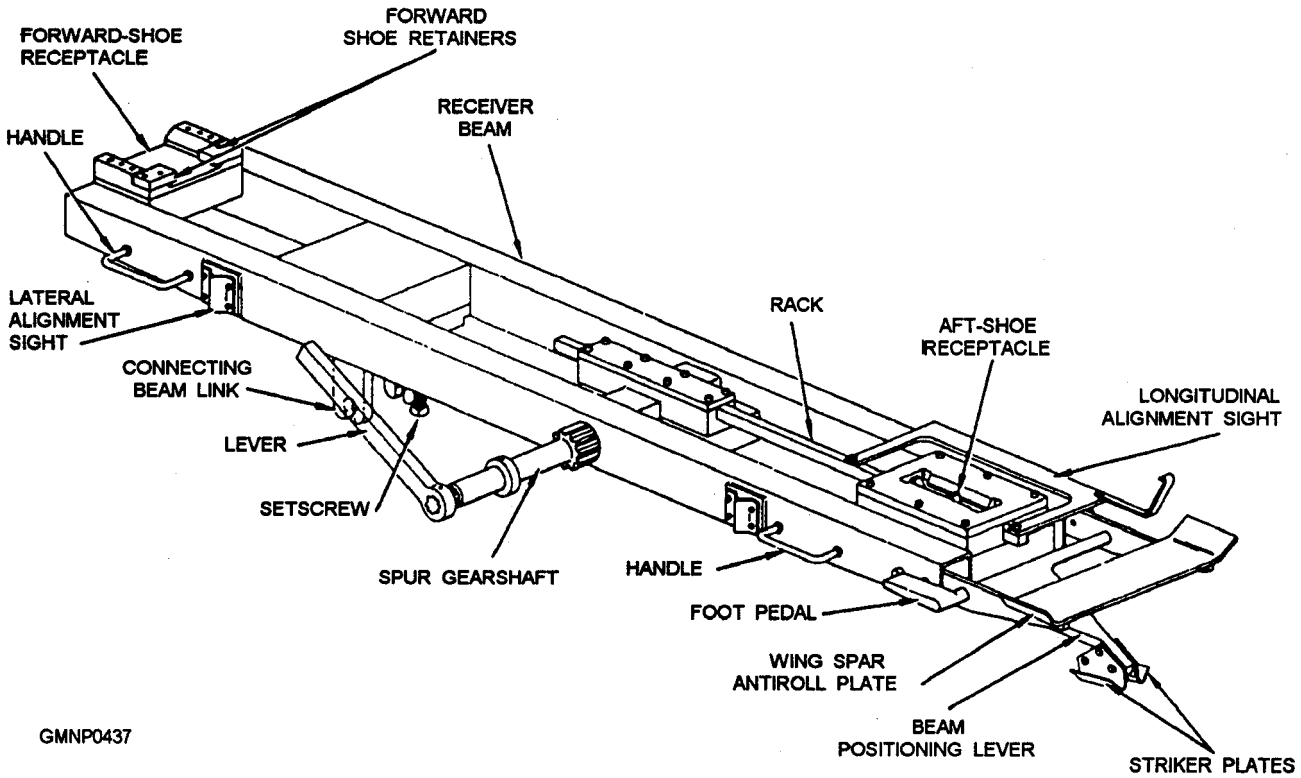

Figure 8-11.—AAW missile receiver beam.

Raising the receiver piston transfers an AAW missile from a dolly to the receiver beam. (Maximum travel is about 5 inches.) The bottom shoes of the missile enter the forward- and aft-shoe receptacles in the beam. The manual lever on the beam is turned to move a "finger" in the aft-shoe receptacle. This finger, in contact with the aft missile shoe, shifts the missile. As the missile shifts, its upper shoes are disengaged from the transfer dolly rail. At the same time, the lower shoes are engaged to the receiver beam. The receiver piston is then lowered, and the transfer dolly is cleared from the area. An offload procedure is just the opposite.

ASW HANDLING EQUIPMENT.— ASW-type missiles are shipped to a Mk 26 GMLS in Mk 183 shipping containers (instead of transfer dollies). A special piece of equipment is used to transfer an ASW missile between its shipping container and the strikedown beam. This device is called the ASW container receiver plate (fig. 8-12). The ASW receiver plate is secured to the receiver piston. It also has some degree of floating movement to aid in missile shoe alignment.

When an ASROC missile arrives on board, special hand trucks are used to position the shipping container over the receiver plate. After the container is secured to the receiver plate, the top lid of the container is removed. The strikedown beam is then depressed to horizontal. The combined acts of extending the strongback and raising the receiver piston cause the upper shoes of the missile to engage the ASW shoe latches of the strongback. When the latches are engaged, the strongback is retracted. This action lifts the missile out of its container, and the receiver piston is then lowered. An offload operation is just the opposite.

Strikedown Onload Operations

An Mk 26 GMLS strikedown onload may be studied in three phases: preparations, on-deck operations, and below-deck operations. Many of the equipment actions do overlap. An entire onload sequence can be performed rather rapidly either in step or auto control. In our discussion, we will onload one AAW missile using the A-side of the GMLS.

SYSTEM PREPARATIONS.— The MCC operator performs the initial steps to ready the GMLS. After activating the control system, a missile-type designation is assigned to an empty hanger rail. The A-RSR/hoist motor is started, and the manual transfer valve is shifted to provide hydraulic fluid to the

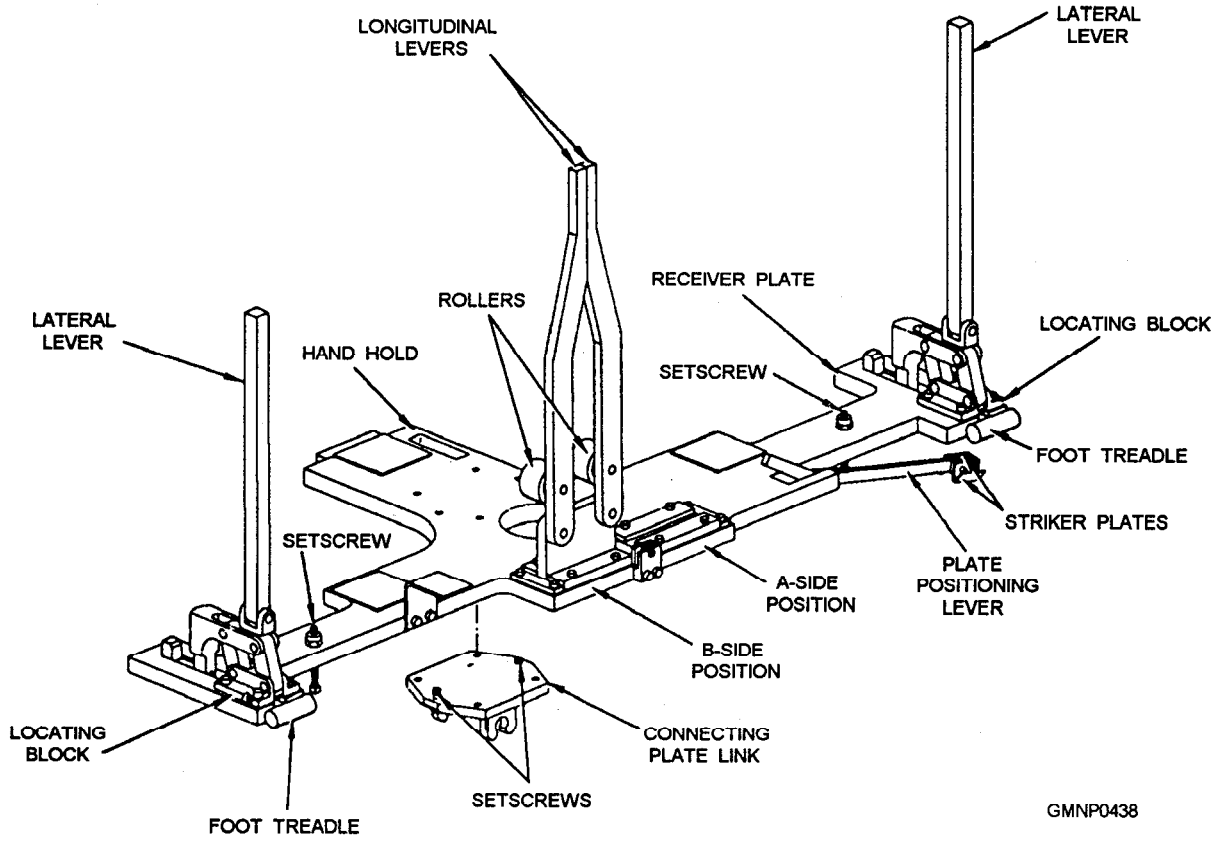

Figure 8-12.—ASW container receiver plate.

strikedown mechanism. The MCC operator selects either auto or step strikedown loading control and opens the marine hatch.

The deck control operator (DCO) establishes communications with the MCC operator. The strikedown control panel is turned ON. Deck personnel remove the protective cover from a receiver piston assembly (which one depends on the replenishing side of the ship).

The DCO raises the receiver to set up the AAW dolly deck track and receiver beam. After the handling equipment is installed, the receiver and beam are lowered. The system is then ready to receive the first missile.

ON-DECK OPERATIONS.— The transfer dolly arrives on deck and is pushed onto the AAW dolly deck track. The missile is aligned and secured over the receiver beam. The DCO operator raises the carrier from the magazine. After the strikedown beam reaches the strikedown level (raised position), the index drum is rotated 80° from center to the selected receiver position. The strikedown beam is then depressed to its horizontal position over the missile. Identification then takes place. The DCO visually identifies the missile as an AAW or ASW type. A missile identification switch on the panel is placed in the AAW/ASW MISSILE position. The strongback will extend its full distance in this case. The other two switch positions (fig. 8-9), the SSM MISSILE and OFF positions, limit strongback extend-distance to accommodate the larger diameter SSM round. Both positions are inactive at that time.

Ensuring the strongback shoe latches are retracted, the DCO extends the strongback to the missile. The receiver piston is raised to place the upper missile shoes in the shoe recesses of the strongback. Jogging the RAISE switch controls the amount of receiver travel. (About 3 1/2 inches of lift is required to seat the missile shoes.) On-deck personnel make final alignment adjustments using the various lever handles. The missile is shifted from the dolly to the strongback. The DCO closes the strongback shoe latches and retracts the loaded strongback to the strikedown beam.

The second phase of missile identification has just taken place. Proximity switches were activated when the forward and aft missile shoe latches engaged. For an AAW missile, a switch was activated to identify the AAW missile group. The AAW identification probe of the strikedown beam (similar to the identification probe at the RSR hoist station) was extended into the round to identify the AAW missile type. If an ASW missile was loaded, one switch would identify the round as an ASW type. Another switch would activate if the missile was a depth charge configuration. The purpose of strikedown beam identification (topside) is to generate control system orders. The RSR may then automatically index an empty hanger rail with the same missile type assignment to the strikedown position.

Back on deck, the DCO raises the loaded strikedown beam to vertical. The index drum is rotated to centerline and latched. The carrier is lowered into the magazine and stops at the intertransfer level. While the carrier is lowering, snubber wedges on the selected hanger rail unlatch. The snubbers open to receive the missile from the strikedown beam.

BELOW-DECK OPERATIONS.— When the carrier reaches the intertransfer level, the MCC operator assumes control. The AAW identification probe is retracted, and the index drum is rotated 60$ to the A-RSR hanger rail. The hanger rail load segments open to receive the missile shoes. The strongback and missile then extend outward.

When the missile engages the hanger rail, the load segments close around the missile shoes. The carrier lowers 6 inches to the carrier stowage level. Lowering the carrier and missile engages the missile shoe restraining latches. The strongback shoe latches open, and the strongback retracts to the strikedown beam. The index drum rotates the beam back to centerline. The snubbers close and the snubber wedges engage.

One missile onload has just been completed. If additional rounds are to be onloaded, the process starts over again when the DCO raises the carrier. If the onload is finished, personnel topside disconnect and stow the handling equipment. The MCC operator closes the marine hatch and returns the GMLS to normal.

Strikedown Offload and Intertransfer

A strikedown offload is a reverse sequence of onload operations. Intertransfer operations change the distribution pattern of the magazine load. Intertransfer uses a combination of onload and offload procedures performed solely below deck. The marine hatch remains closed, and the MCC operator controls all equipment functions. The operation may be accomplished in step or automatic control.

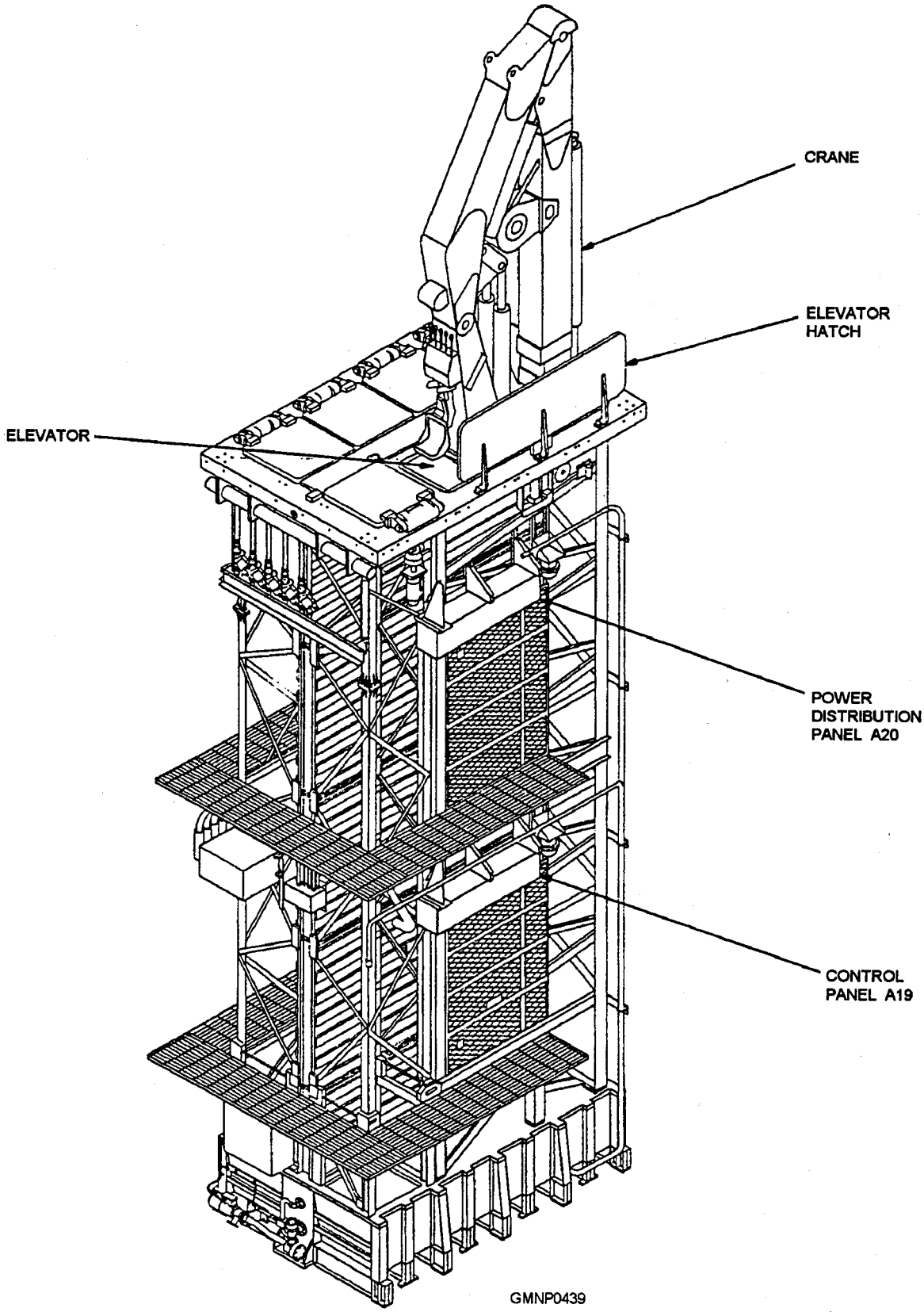

Figure 8-13.—5-cell strikedown module Mk 3 Mod 0.

MK 41 VERTICAL LAUNCHING SYSTEM

The Mk 41 vertical launching system (VLS) strikedown equipment is housed in the 5-cell strikedown module Mk 3 Mod 0 (fig. 8-13). This strikedown equipment occupies cells 6, 7, and 8—the same cell space used in 8-cell modules Mk 1 Mod 0 and Mk 2 Mod 0 for missiles. The VLS strikedown equipment gives the VLS crew self-contained equipment that can be used to onload and offload missile canisters Mk 13 and Mk 15 and training canister Mk 19 into and out of the module cells. The strikedown equipment can also be used to remove any empty canisters and movother strikedown equipment as necessary.

Strikedown Equipment

The five-cell strikedown module consists of three subassemblies: the elevator hatch, elevator, and crane assemblies. When not in use, the hatch is closed and the elevator and crane are stored below deck until onload or offload operations.

ELEVATOR HATCH ASSEMBLY.— The elevator hatch assembly (fig. 8-14) is hinged to the deck platform. This assembly provides weather and ballistic protection for the strikedown crane, elevator, and launcher interior. The hatch is driven open or closed by the elevator hatch cylinder. When closed, the hatch is secured by six hatch dogs. The hatch dogs apply pressure to a watertight seal. The dogs are linked together and actuated by two chains, which are connected to, and operated by, the hatch dog/undog cylinder. Two directional control valves, located below

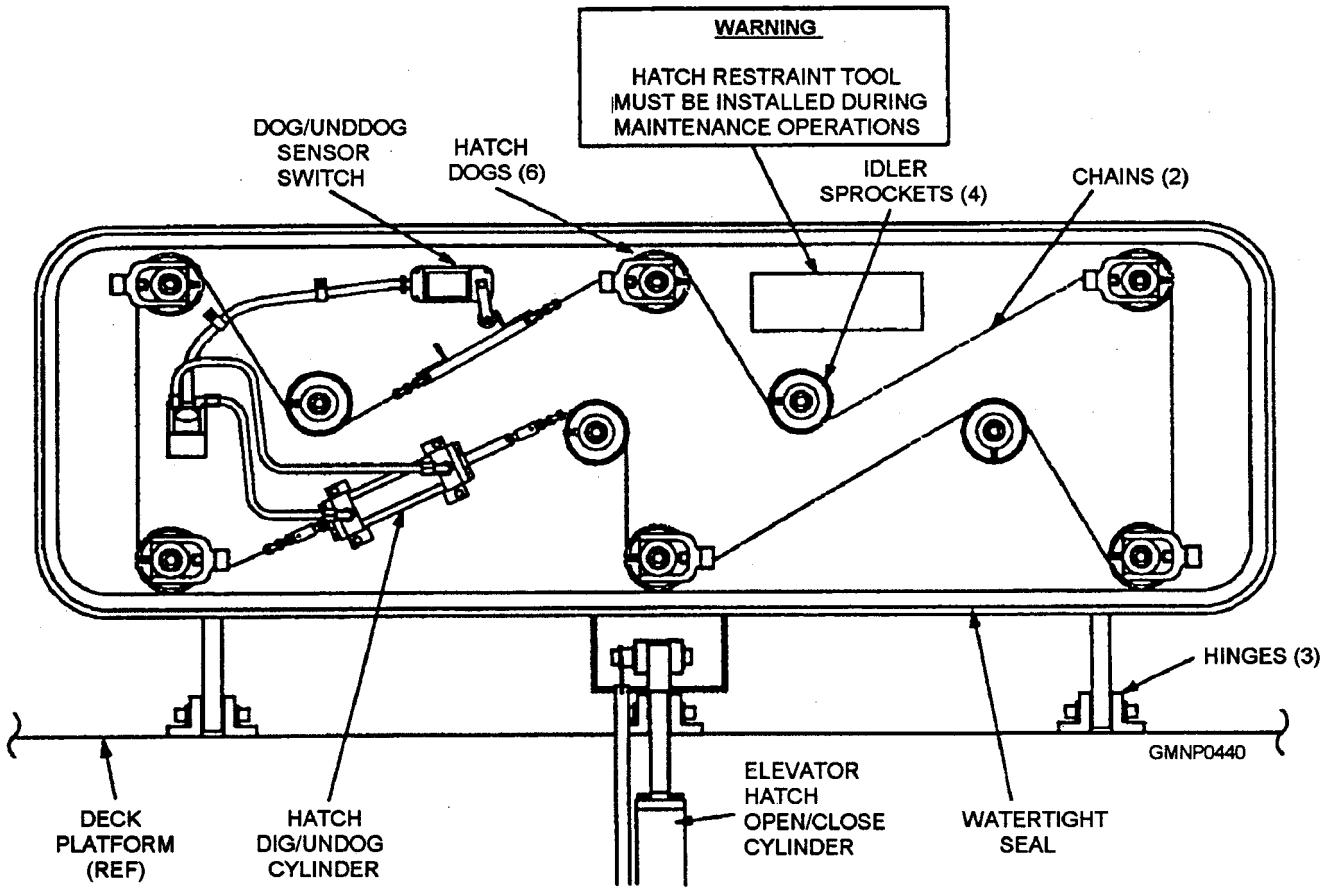

Figure 8-14.—Elevator hatch in OPEN position.

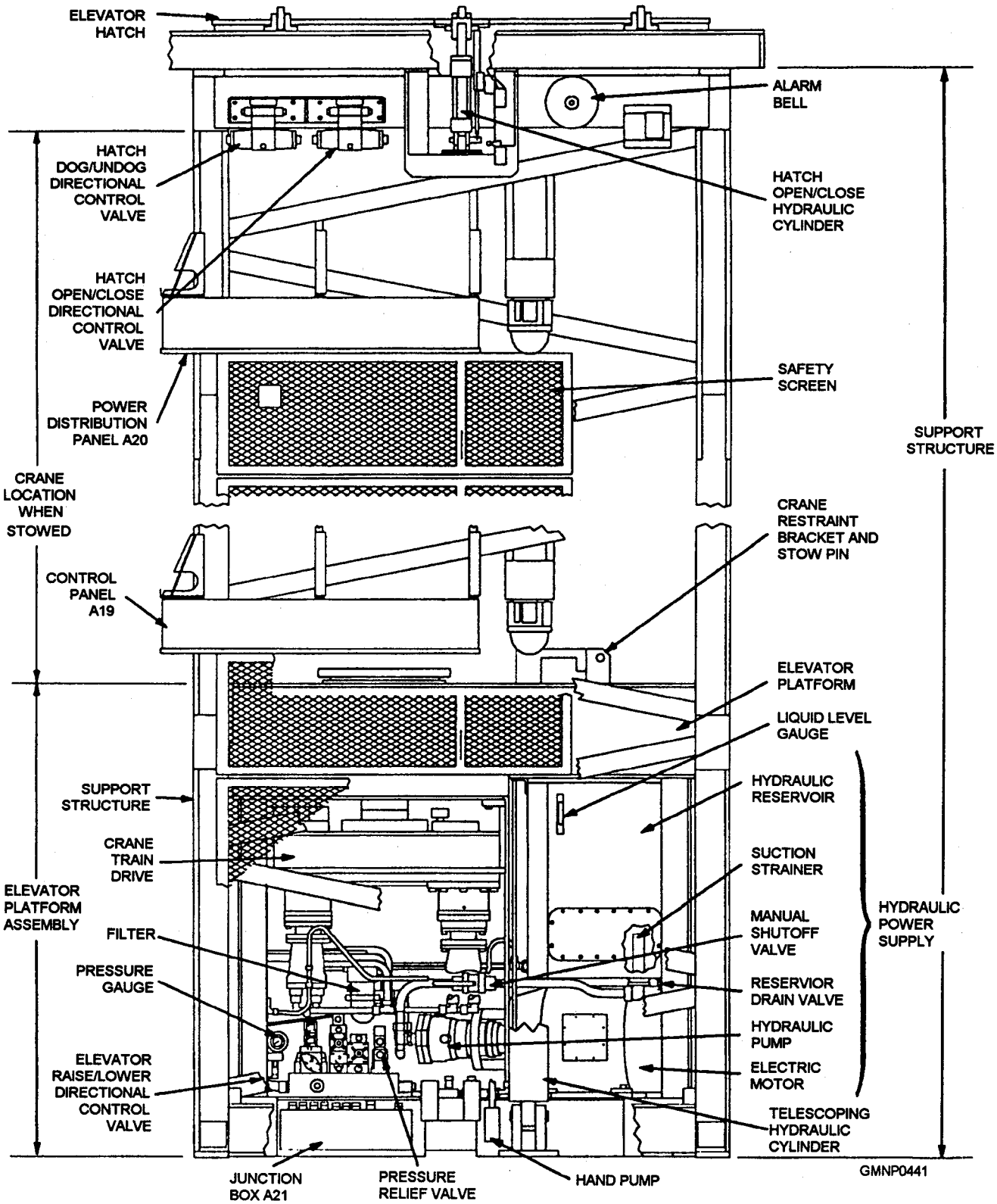

Figure 8-15.—Elevator assembly Mk 2 Mod 0.

the hatch on the walkway side (fig. 8-15), direct the flow of hydraulic fluid to the hatch dog/undog cylinder and the open/close hatch cylinder. The valves can be actuated manually in an emergency. The hatch operation is controlled by toggle switches located on the control panel A19.

ELEVATOR ASSEMBLY.— The elevator assembly Mk 2 Mod 0 shown in figure 8-15 consists of the support structure, elevator platform assembly, control panel A19, and power distribution panel A20. These parts work together to raise and lower the elevator assembly.

The support structure forms a shaft on which the elevator platform assembly travels. The shaft has lock bar sockets and guide rails that interface the platform with sensor switches on the support structure; these switches indicates the position of the platform. An alarm bell, mounted on the upper part of the support structure, sounds when the hatch or platform is in motion. An eight-section metal safety screen prevents personnel from falling into the elevator shaft and the moving platform. If the powered hydraulic pump fails, a manual hydraulic pump (fastened to the lower support structure) can be used only to dog/undog and open/close the elevator hatch.

The elevator platform serves as a base for the strikedown crane. The platform, which is rectangular in shape, is mounted on a three-stage telescoping hydraulic cylinder. The cylinder raises and lowers the platform. The platform can be moved only when the crane is stowed. An emergency system, consisting of a spring set and two knurled rollers, stops the downward motion of the elevator if hydraulic pressure falls below 200 psi.

The control panel A19 (fig. 8-16) is a watertight cabinet mounted on the elevator support structure just below the upper walkway, as shown in figure 8-15. The A19 control panel lever-lock toggle switches control the motor hydraulic power start-up, elevator hatch, lock bars, and elevator. These switches, except MOTOR-START and MOTOR-STOP, must be actuated and held until the desired ffunction is complete. Except for MOTOR-START and MOTOR-STOP, the operation can be stopped anytime by the release of the toggle switch.

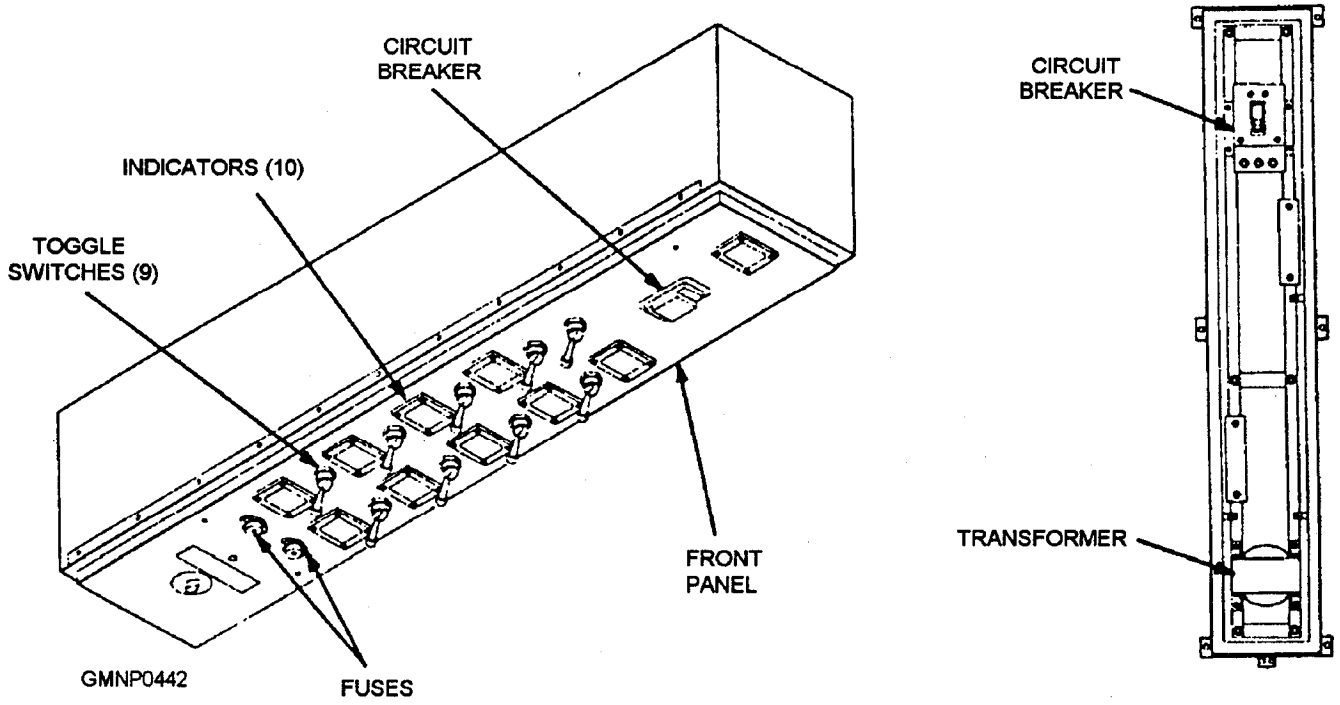

Figure 8-16.—Control panel A19.

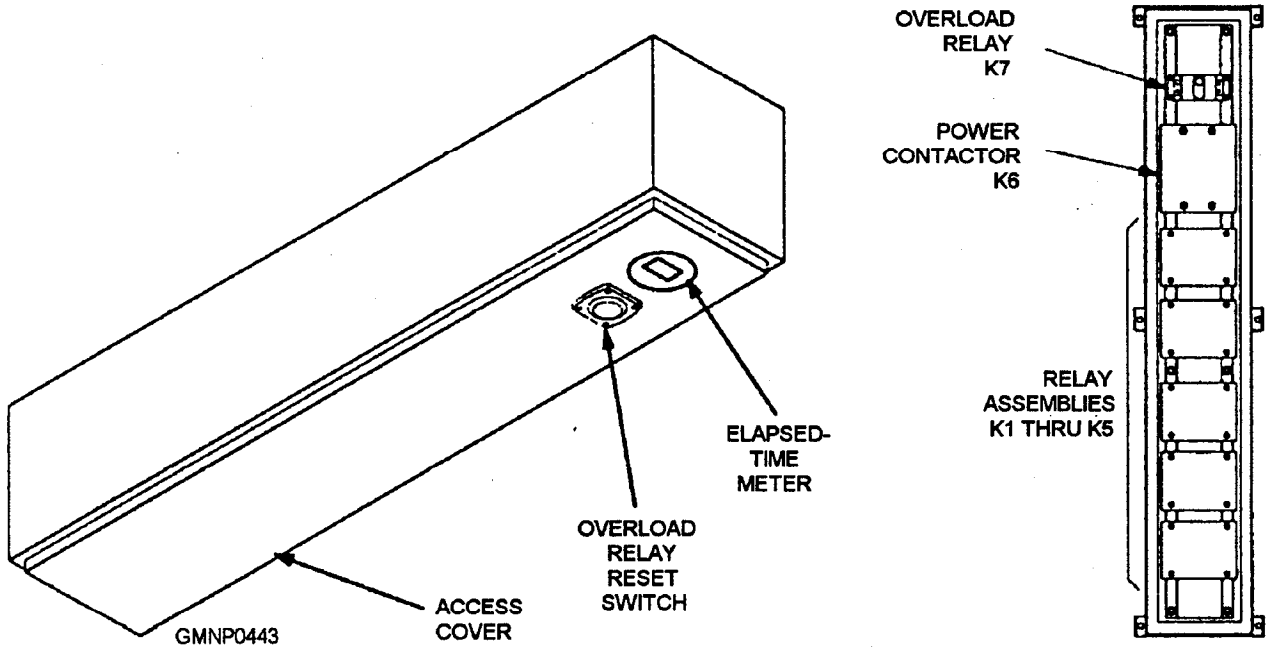

Figure 8-17.—Power distribution panel A20.

The power distribution panel (PDP) A20 (fig. 8-17) routes the 440-VAC, 60-Hz, three-phase power through a three-phase power contactor to the 30-hp electric motor of the hydraulic power supply. The cabinet is watertight and mounted near the top of the elevator support structure, as shown in figure 8-15. The overload relay reset switch and elapsed time meter (that records component in-service time for the elevator) are located on the access cover.

CRANE ASSEMBLY.— The Mk 1 Mod 0 strikedown crane (fig. 8-18) is a hydraulically powered, knuckled-type crane. The crane mast is bolted to the elevator platform through the drive king post. The crane mast contains the crane operator's console, collapsible operator seat, footrests, and access steps. The elevator assembly supplies the electric power for the crane indicator night lights and the hydraulic power that drives the crane.

The crane has an inner and outer boom connected in series to the upper end of the mast by pivot points (referred to as knuckles). Two parallel hydraulic cylinders pivot the inner boom at the mast, and two others pivot the outer boom at the inner boom. A duplex-type hydraulic cylinder attached to the outer boom extends and retracts the two boom extensions.

The crane contains a static hook (on the bottom tip) that is secured with a stowage pin when not in use. A whip hook, on a pulley block, raises and lowers as the winch pays out or reels in the winch cable. The winch/drive assembly is hydraulically driven.

The crane operator's console contains the directional control levers (fig. 8-19) used to train the crane mast, raise and lower the inner boom, raise and lower the outer boom, extend and retract the boom extensions, and raise and lower the whip hook. Four visual indicators are located near the controls. The train bearing, inner boom elevation angle, and boom extension indicators enable the operator to position the boom over any selected cell. The temperature gauge allows the operator to monitor hydraulic fluid temperatures during crane or elevator operations.

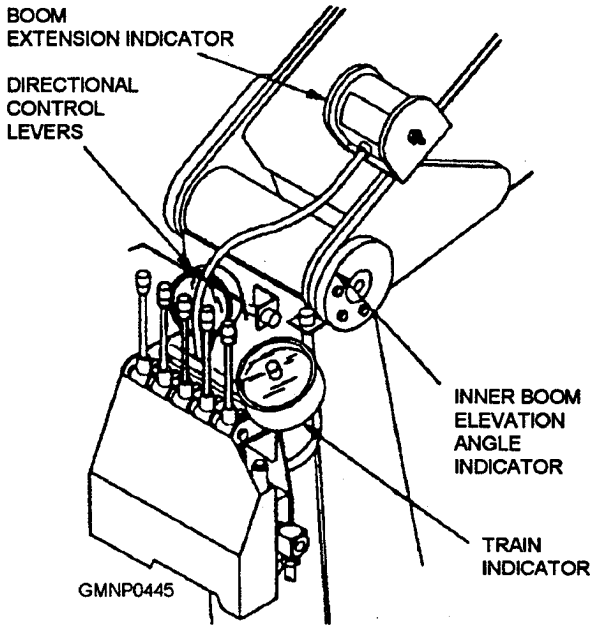

Figure 8-19.—Crane operating controls.

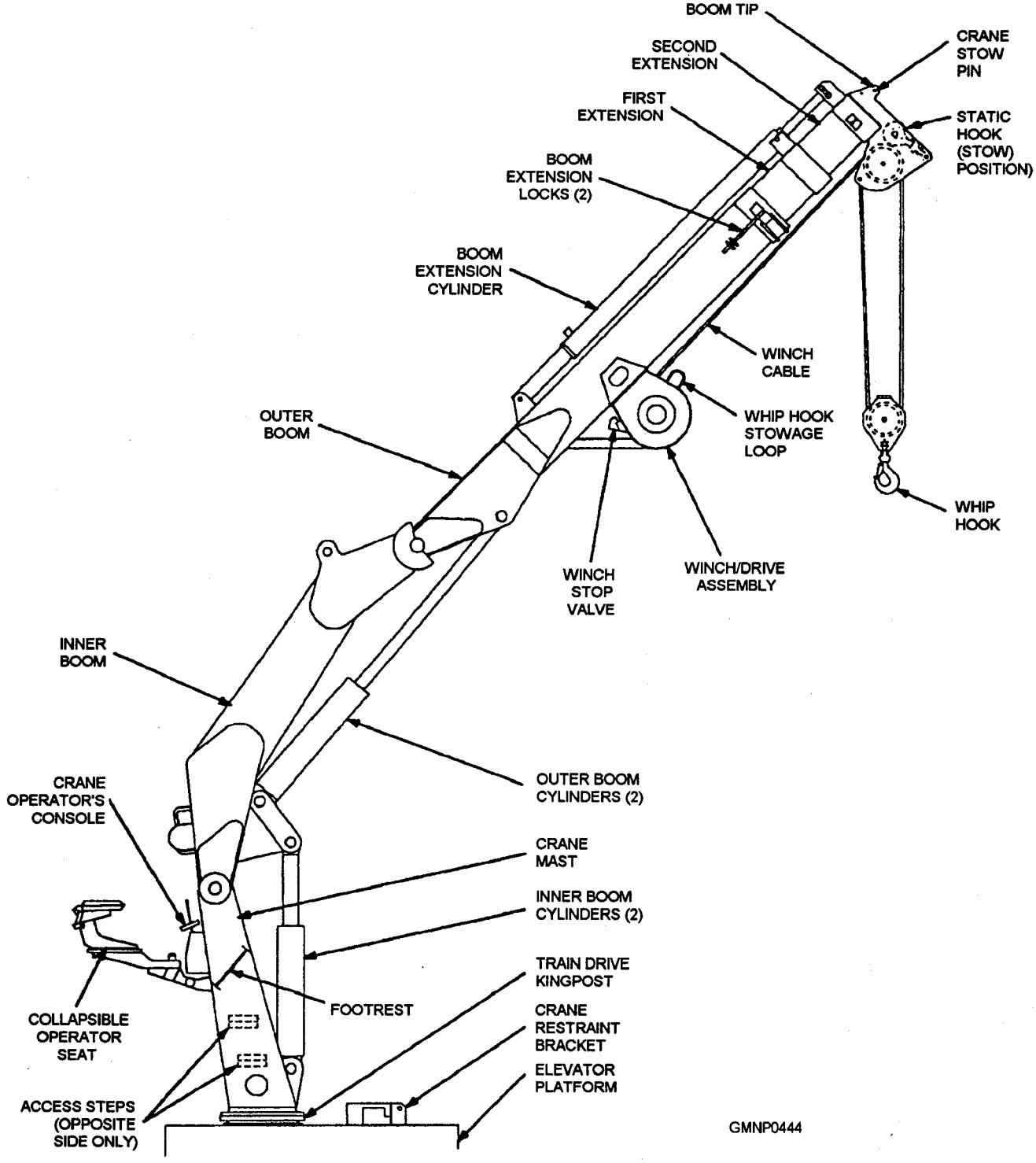

Figure 8-18.—VLS strikedown crane Mk 1 Mod 0 in operating configuration.

Strikedown Operations

All strikedown operations contribute to the safe loading or offloading of missile canisters from the VLS. These operations require a well-trained, competent crew that strictly adheres to basic strikedown operations.

Before any strikedown operation, the deck supervisor reviews the planned operations with the crew and delegates specific assignments. During strikedown operations, it is paramount that the crew maintain constant communication. All members of the strikedown crew, with the exception of the deck crew,

must be personnel qualification system (PQS) certified and have a naval enlisted classification (code) (NEC) of 0981.

Strikedown Procedures

Because of the complexity of the procedures for strikedown operations of the VLS, they cannot be covered here. These procedures are described in detail in NAVSEA Technical Manual SW394-AF-MMO-0501VLS, revision 2, *Vertical Launching System Mk 41 Mods 0/1/2 Strikedown Equipment.*

FIRE SUPPRESSION SYSTEMS

LEARNING OBJECTIVES: Explain the purpose and basic functions of fire suppression systems used in GMLSs.

GMLS fire suppression systems are designated as auxiliary equipments within the launching system. They protect the ship and its personnel from hazardous conditions resulting from fires or the high temperatures of fires. The text discusses three basic classes of fire suppression systems used in the GMLS community:

1. Carbon dioxide (CO_2) systems
2. Water injection systems
3. Dry-type sprinkler systems

CO_2 systems are used primarily to combat electrical fires. Fixed or installed CO_2 systems normally protect the unmanned GMLS areas, such as magazines and some launchers. Portable systems (you and a 15-pound CO_2 extinguisher) are normally used to protect the manned GMLS areas, such as launcher control rooms.

Water injection systems are designed to direct a continuous stream of water into the exhaust nozzle of a rocket motor. Should the rocket motor accidentally ignite in the magazine, the stream of water will control the burning reaction of the propellant. The water will also cool the missile and the surrounding area. It MAY EVEN extinguish the burning rocket motor, but not necessarily. Water injection systems are also known as booster suppression or quenching systems.

Sprinkler systems are designed to spray water onto the missiles in magazine stowage and handling areas of a GMLS. Sprinkler systems aid in extinguishing fires. They also cool the missiles below the temperatures that could start rocket motor ignition or warhead detonation.

In covering the various GMLS fire suppression systems, we will deviate slightly from the sequence we have followed so far. Atypical or representative system will be presented. Any important differences or unique features of individual GMLSs will be noted. Mainly, component location and numbers are the greatest difference.

A TYPICAL CARBON DIOXIDE SYSTEM

A typical GMLS carbon dioxide (CO_2) system is permanently installed (fixed) in the missile magazine area. The system is designed to detect an excessive temperature buildup and activate automatically. Once the system is activated, the entire space is flooded with a large volume of CO_2 extinguishing agent. The system may also be activated manually from either a local or remote control station.

Physical and Functional Description

The primary pneumatic-mechanical components of a simple CO_2 system include the thermopneumatic control elements and supply cylinders. The supply cylinders are equipped with control and discharge heads. The system also has other associated valves and alarm switches. Many of these components are located just outside the magazine structure. The control devices and CO_2 discharge nozzles are inside. They are strategically placed near fire-prone equipments (electric motors, connection boxes, slip rings, and so on).

HEAT-SENSING DEVICES.— Heat-sensing devices (HSDs) were formerly designated thermosylphon units. HSDs are the detecting units of the system (fig. 8-20). They are designed to develop a pneumatic pressure signal when space temperature increases to a preset activating point. The rate of rise in space temperature maybe rapid or slow.

The HSD consists of a spring-loaded, rubber bellows housed in a mesh-style cage. The bellows is held in an extended or expanded position against a compressed spring by a fusible element. HSDs are mounted above the area they monitor. They connect to the control head of the CO_2 supply cylinder by a pneumatic transmission-line network.

In the event of an actual fire or explosion, a rapid rise in space temperature is experienced. The heat generated by the mishap is conducted to the air inside the HSD bellows. The air inside the bellows quickly expands and increases in pressure. This pressure "signal" is transmitted to the control head of the

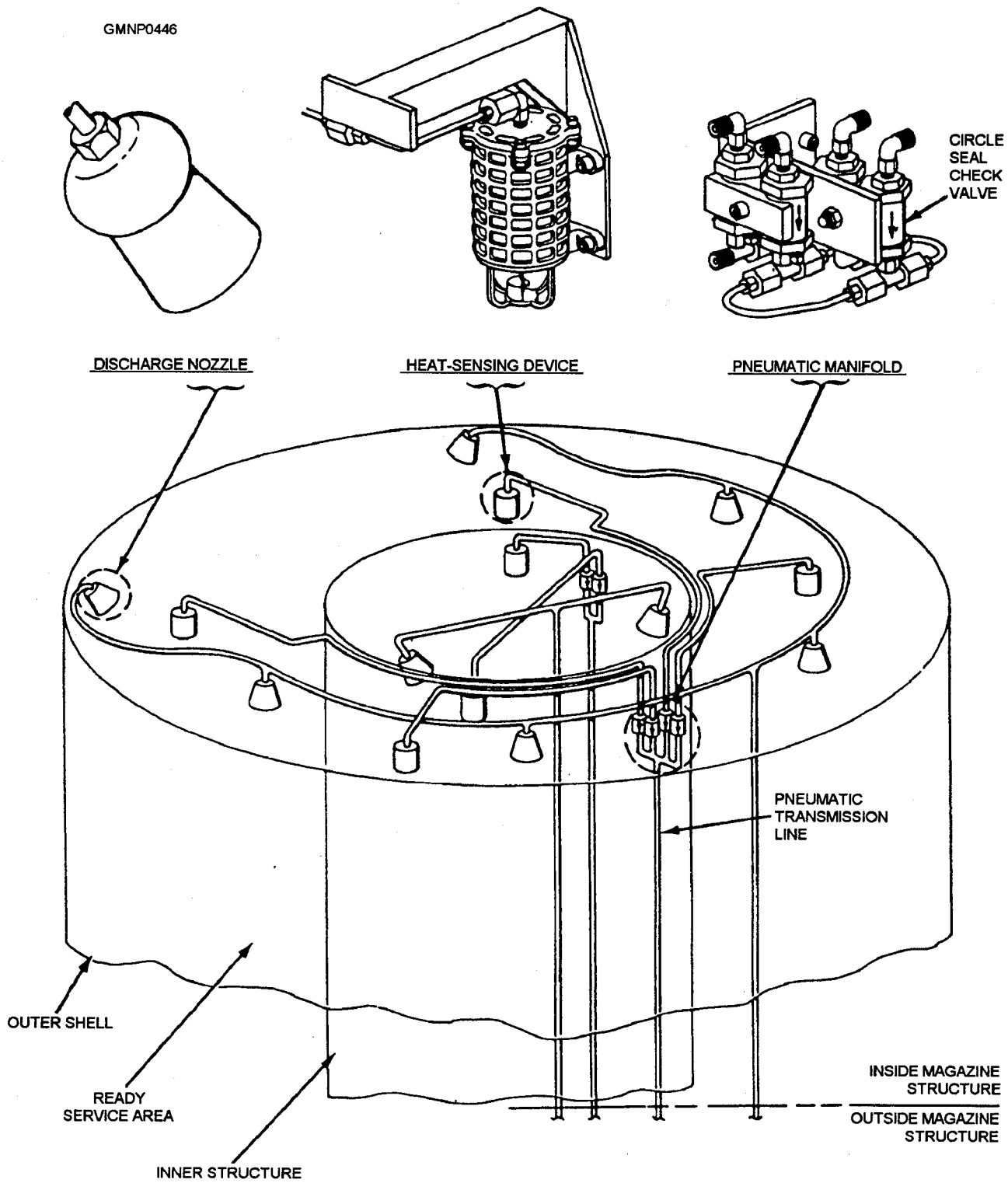

Figure 8-20.—Components of a CO_2 system, inside magazine structure.

cylinder. The pressure-sensitive head is tripped, and the system is activated.

In the event of a smoldering type of fire or a heat buildup resulting from a fire in an adjacent compartment, a slow rise in space temperature is experienced. In this case, the air inside the HSD bellows expands (as before). However, its reaction is not quick enough to trip and activate the system. For this reason a fusible element is used.

HSDs are designed with a fusible link as the melting element. The link is made of a low-melting-point metal compound similar to solder. When a certain temperature is reached, the compound starts to melt.

In a GMLS CO_2 system, the fusible link is designed to melt at about 160°F (±3°). When the fusible element melts, the compressed spring around the bellows is released and allowed to expand. This action causes the bellows to collapse. The sudden compression of the HSD bellows creates a pneumatic pressure impulse signal. The magnitude of this air signal is measured in ounces per square inch (osi). The pressure impulse trips the control head and activates the system.

Transmission Lines.— Transmission lines connect the HSDs to the control head. The lines are 1/8-inch OD (outside diameter) by 0.088-inch ID (inside diameter) rockbestos-covered, seamless copper tubing. Quite a few rules pertain to the correct material and installation requirements associated with these lines. Refer to *Technical Manual for Magazine Sprinkler Systems* for guidance when repairing or replacing transmission lines. (Although this manual is the master reference for sprinkler systems, much of its information also pertains to CO_2 system requirements.)

Circle Seal Check Valves.— The circle seal check valve (shown in fig. 8-20) is a brass, spring-loaded check valve. It closes against a rapid change of air pressure in one direction and opens when air pressure is applied in the other direction. One circle seal check valve is installed in each transmission line leading from an HSD. The valve is installed with its directional arrow (stamped into the body) pointing toward the control head.

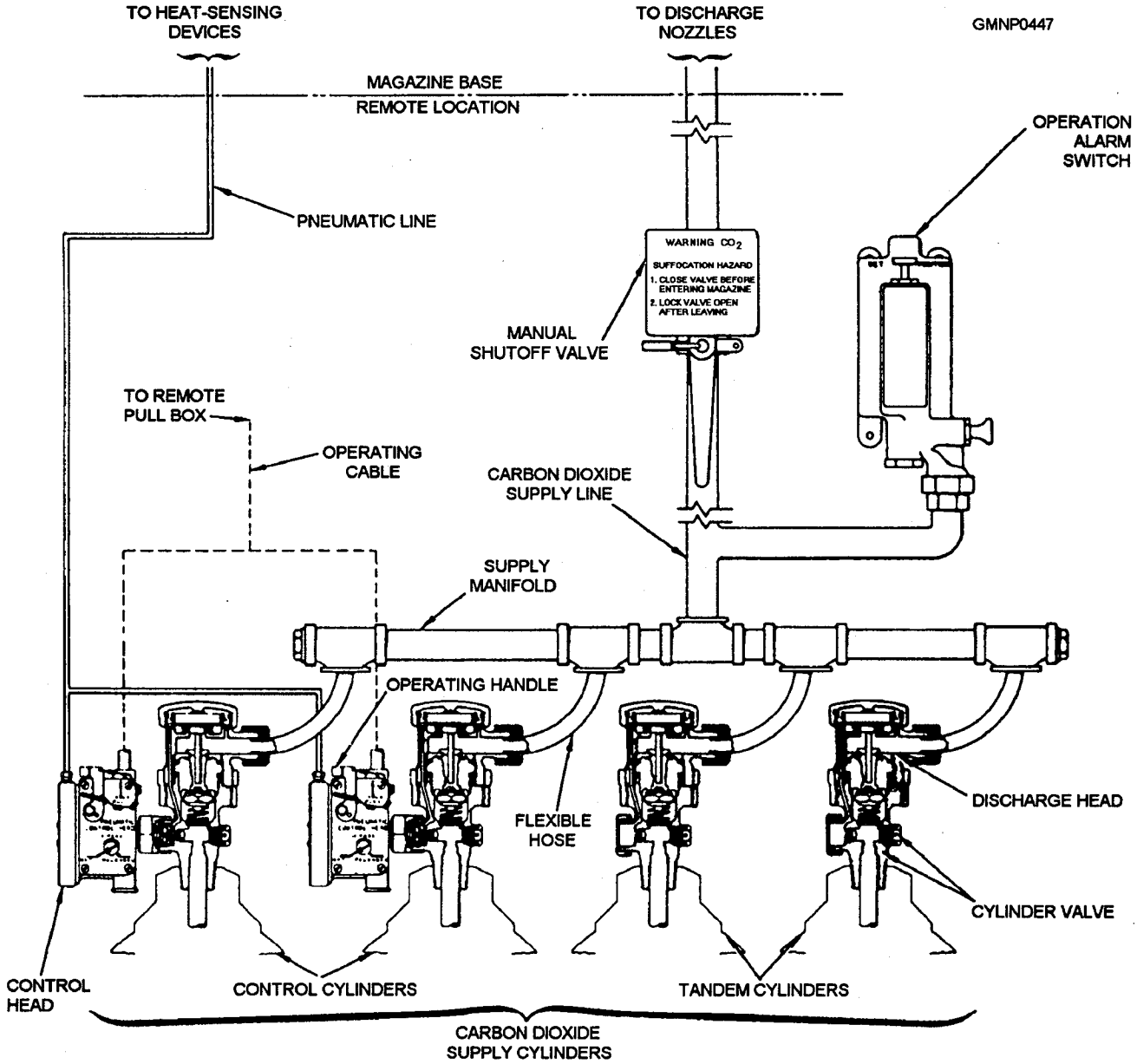

Figure 8-21.—Components of a CO_2 system; outside magazine structure.

The check valve prevents the rapid increase of air pressure created by one HSD (such as when its bellows collapse) from pressurizing the other HSDs. The full air-pressure signal is then ported directly to the control head. This action ensures positive system activation.

A vent is installed in the body of the check valve. The vent permits a slow backflow of air to bypass the main check valve element. This venting equalizes air pressure within the system in response to normal changes in ambient (surrounding) temperature.

SUPPLY CYLINDERS.— GMLS fixed CO2 systems usually have at least two supply cylinders. Each cylinder has a 50-pound CO2 capacity and weighs 165 pounds when fully charged. It contains liquid carbon dioxide under a pressure of 850 psi at 70°F. Each cylinder of the system has a discharge head and a cylinder valve. At least one of the cylinders will also have a pneumatic control head. The other cylinder(s) will be in tandem with the main control cylinder(s). See figure 8-21.

Pneumatic Control Head.— A pneumatic control head (shown in fig. 8-21) reacts to HSD pressure signals or to manual operating levers. The control head is tripped to open the discharge head and cylinder valve, which release the liquid CO2 from the cylinder. The control head consists of an air chamber with a diaphragm. The control head also has two plungers, safety locking pins, and a manual (local) operating lever.

The pressure chamber in the control head has an orifice that vents air pressure at a predetermined rate. When pressure in this chamber increases faster than it can be vented, the diaphragm expands. This movement trips a lever that releases a trigger mechanism. The trigger mechanism shifts the two plungers. Shifting the plungers opens the pilot seat in the cylinder valve.

Cylinder Valve and Discharge Head.— The cylinder valve and discharge head are shown in figure 8-22. Together, they block the escape of the liquid CO2 from the cylinder until the control head is activated.

When the plungers from the "tripped" control head open the pilot seat, CO2 flows into the chamber above the discharge head piston. The piston is shifted (down) against its spring. The ball check valves trap gas pressure in the upper chamber. This keeps the piston open (down) and ensures rapid and complete cylinder discharge. Shifting the piston opens the cylinder valve, allowing CO2 to flow to the exhaust manifold and supply lines. (See fig. 8-21.)

DISCHARGE NOZZLES.— CO2 discharge nozzles are installed so that their discharge blankets certain key electrical components. The nozzles are also located so that the entire area they serve is flooded with CO2. The nozzle is a bell-shaped device (fig. 8-20)

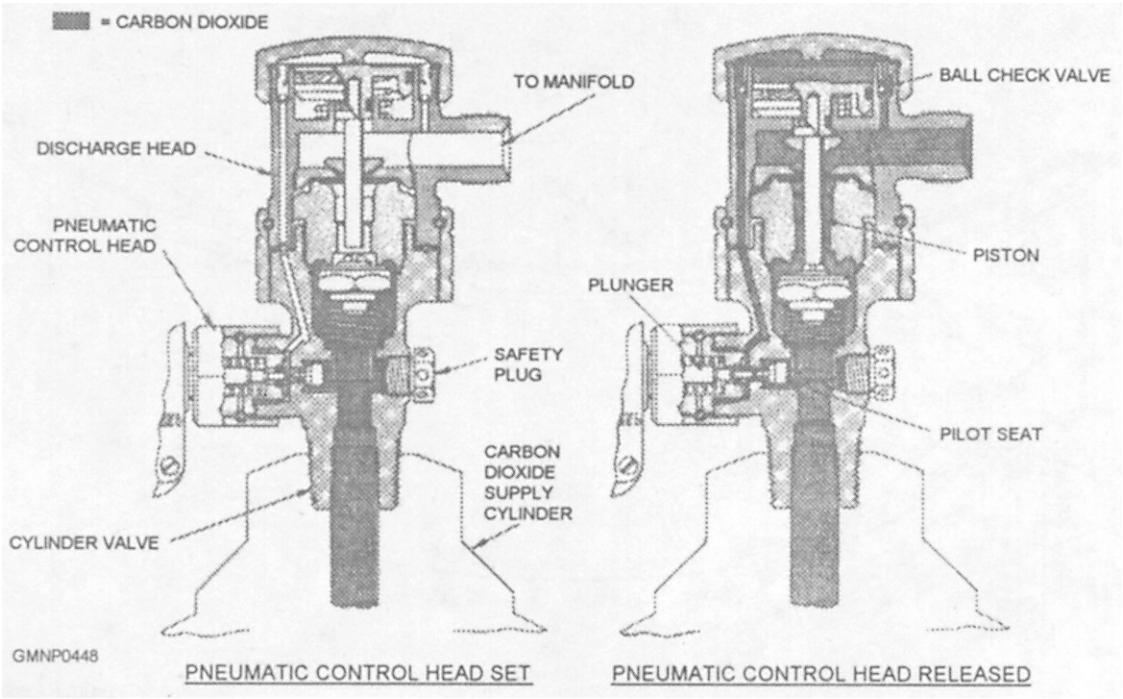

Figure 8-22.—Cylinder valve and discharge head schematic.

with an orifice at its discharge point. The orifice restricts the discharge of the CO_2 and creates an even flow from all system nozzles. The gaseous "snow" of CO_2 quickly extinguishes the fire.

MISCELLANEOUS COMPONENTS.— A manually operated shutoff valve is installed in the CO_2 discharge line between the supply cylinders and discharge nozzles. (See fig. 8-21.) The valve is physically located outside the magazine near its entrance. To avoid a CO_2 suffocation hazard, unlock the valve and close it before you enter the magazine. If the system should activate, the supply cylinders will release CO_2. However, the closed valve will stop the CO_2 so that you can keep breathing.

CO_2 pressure entering the supply line activates an operation alarm switch (fig. 8-21). Audible alarms and lights are turned on, signaling that the CO_2 system has activated. These warning devices are usually located right outside the magazine area and at the ship's damage control (DC) central room. The switch must be manually reset if activated. The alarm circuits maybe maintenance-tested.

A remote control pull box allows personnel to release the pneumatic control head(s) manually. The pull box is located outside the magazine. It has a transparent, breakable shield and a pull handle. A wire cable is connected to the control head trigger mechanism. Breaking the glass and pulling the handle activates the system. The CO_2 system can also be activated locally. Manually removing a safety pin and tripping a lever on the pneumatic control head releases the CO_2.

Actual GMLS CO_2 Systems

Every GMLS has some type of CO_2 fire-fighting capability. Some GMLSs have a combination of fixed

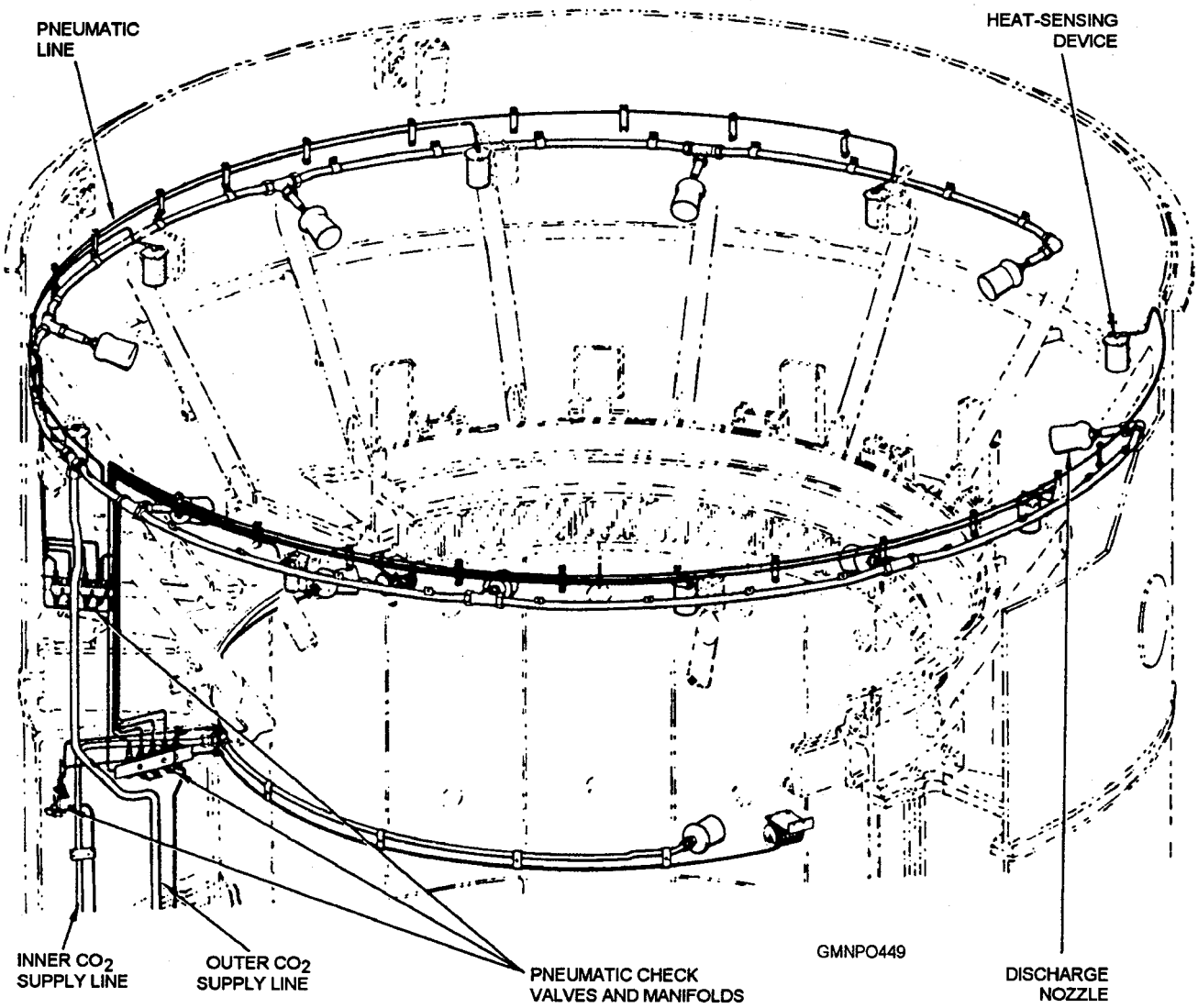

Figure 8-23.—Arrangement of inner and outer CO_2 systems.

and portable CO_2 protection. Other GMLSs only have portable extinguishers available. System design and configuration sometimes restrict the installation of fixed CO_2 system hardware.

The Mk 26 GMLSs do not have a fixed CO_2 system. Portable extinguishers, readily accessible throughout key areas of the GMLSs, provide the protection.

The Mk 13 GMLSs do have fixed CO_2 systems in addition to portable extinguishers. The Mk 13 GMLSs have separate inner and outer magazine CO_2 systems (fig. 8-23). The inner system covers the center column or inner structure. The outer system floods the RSR area.

A TYPICAL WATER INJECTION SYSTEM

The general purpose of a water injection system has already been stated. In a static or ready condition, injection system piping places a charged supply of freshwater under each missile. Should a missile accidentally ignite, blast pressure will activate the system. Instantly, a pressurized stream of freshwater injects into the core of the rocket motor. When the limited supply of freshwater is depleted, salt water (from the fire main supply) is used to continue the operation.

Once the injection system is activated, it must be secured manually. Additionally, provisions must be made to remove and discharge the large quantity of water remaining in the magazine. That is normally accomplished by a magazine drainage system and an overboard eductor system.

Why use freshwater? Freshwater is used because it does not promote corrosion as quickly as salt water, Salt water can ruin the piping and valves of the system. Normally, an additive to the freshwater slows any corrosive action and helps seal minor leakage.

System Description

Many of the water injection system components are located outside the magazine area. They function to maintain the system in a ready state and supply the freshwater and salt water. The components inside the magazine distribute and activate the injection system. Refer to figure 8-24 for a schematic illustration of a typical water injection system.

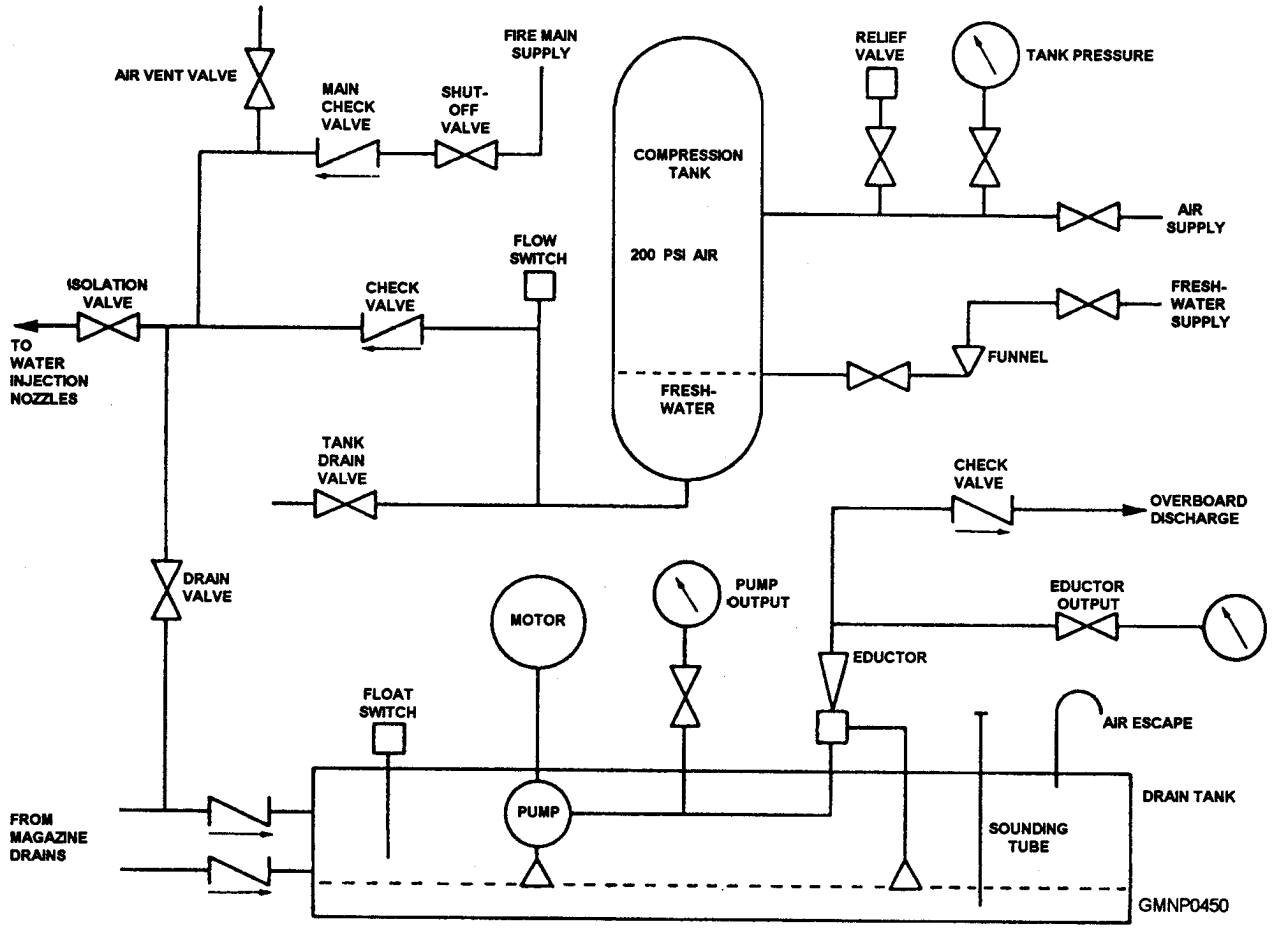

Figure 8-24.—A typical water injection system; these components are located outside the magazine.

EXTERNAL MAGAZINE COMPONENTS.— The compression tank of the injection system is usually located in a machinery room below or near the magazine. The tank is an enclosed structure, normally filled with freshwater to one half of its 125-gallon (approximate) capacity. The tank is then charged to 200 psi from a ship's HP air supply. The 200-psi freshwater pressure is transmitted throughout the injection piping network and remains in a static state under each missile.

A flow switch is installed in the outlet line of the tank. When the system does activate, freshwater flows through the switch. The switch actuates and energizes a variety of equipments. Examples include ship fire pumps, alarm circuits, and eductor systems.

A check valve is also installed in the outlet line of the tank. When open, it permits freshwater to flow to the water injector piping. When closed, it prevents salt water from flowing back into the compression tank.

Another hydraulically operated check valve, designated the main check valve, is shown in figure 8-24. It isolates the fire main supply from the injection system until the system activates. In a static state, the 200-psi freshwater supply keeps the valve closed against the ship's fire main supply. (I&us assume fire main supply pressure is rated at 70 psi. Actual fire main pressure varies among ships.) However, when the system does activate, the 200-psi freshwater pressure will decrease. As fire main pressure *equals* or exceeds freshwater pressure, the main check valve opens. Salt water flows to the piping network of the system. A manually operated shutoff valve above the main check valve must be closed to secure the system.

INTERNAL MAGAZINE COMPONENTS.— The injection system piping network distributes injection water around the magazine base area. At every position a missile can come to rest, a standpipe is threaded into the supply lines. Attached to the top of the standpipe is a water injection (detector) nozzle. The unit is just a few inches below the tail cone of the rocket motor.

The main component parts of a detector nozzle (fig. 8-25) include a closure piston and an actuation piston. Three lock balls and a gold-wire spring pin connect the two pistons. The lock balls (1/4-inch ball bearings) are forced outward by the actuation piston. They serve to hold the closure piston in place against the 200-psi freshwater supply.

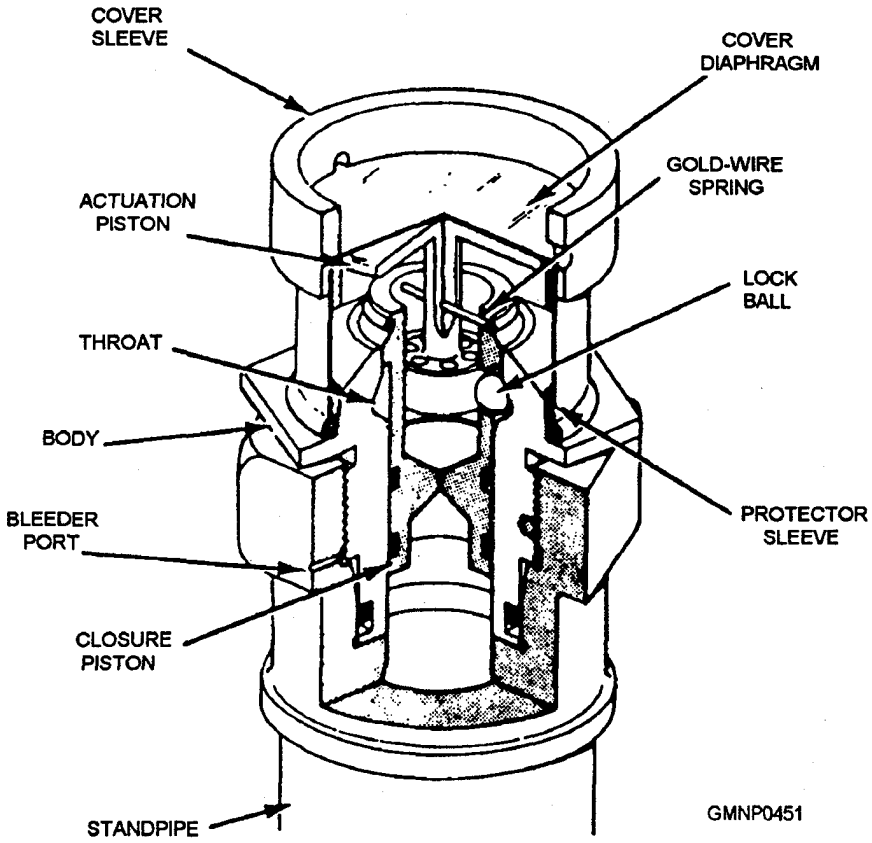

Figure 8-25.—Water injector (detector nozzle).

The actuation piston is held in place by the gold-wire spring pin. A force of approximately 16 pounds is required to break (or bend) the pin. Should a missile accidentally ignite, the pressure created by rocket motor exhaust acts on the top of the actuation piston. The piston is forced downward and breaks the pin. The lock balls drop into the throat of the nozzle and release the closure piston. The 200-psi freshwater pressure forces the closure piston upward to activate the injection system.

SYSTEM OPERATION.— Now that the injection system is activated, the other components begin to function. As the freshwater continues to shoot out the detector nozzle, the flow switch actuates. Freshwater pressure decreases and, in a matter of seconds, the main check valve opens. The system continues to operate, discharging the fire main supply from the (one) activated nozzle. When the emergency is over, personnel turn off the fire main supply to secure the system and replace the detector nozzle. The system is then flushed, refilled, and charged.

A word of caution worth remembering—Use extreme care when working around a water injection nozzle. The gold-wire spring pin is sensitive. A dropped tool or a misplaced foot can result in a tremendous surprise !

Actual GMLS Water Injection Systems

All GMLSs have a water injection system. Each system operates on the same principle. Only the physical location and number of components differ.

The Mk 13 GMLSs (fig. 8-26) have a total of 96 detector nozzles (48 on the inner ring and 48 on the outer ring). Since the Mk 13 GMLS RSR rotates, the RSR cells (16 inner and 24 outer) can be indexed and stopped at over 96 different positions. The Mk 26 GMLS has one detector nozzle at each RSR hanger rail position. The Mk 41 VLS has a deluge system for each cell canister, which floods the canister during rocket motor ignition without the missile leaving the canister.

The Mk 13 GMLSs use a special valve in their water injection systems. It is called a restart valve. In the typical water injection system schematic (fig. 8-24), this valve would replace the manual shutoff valve above the main check valve. The restart valve may be operated manually or by a remote-controlled solenoid. The solenoid is actuated by a switch located inside the launcher control room.

Initially, the injection system must still be activated automatically. However, the restart valve may be used to secure the system. It can also be used to reactivate (restart) the system in an emergency situation (such as a flashback).

A special feature of the Mk 26 GMLS is that a sensing line connects the water injection system to the

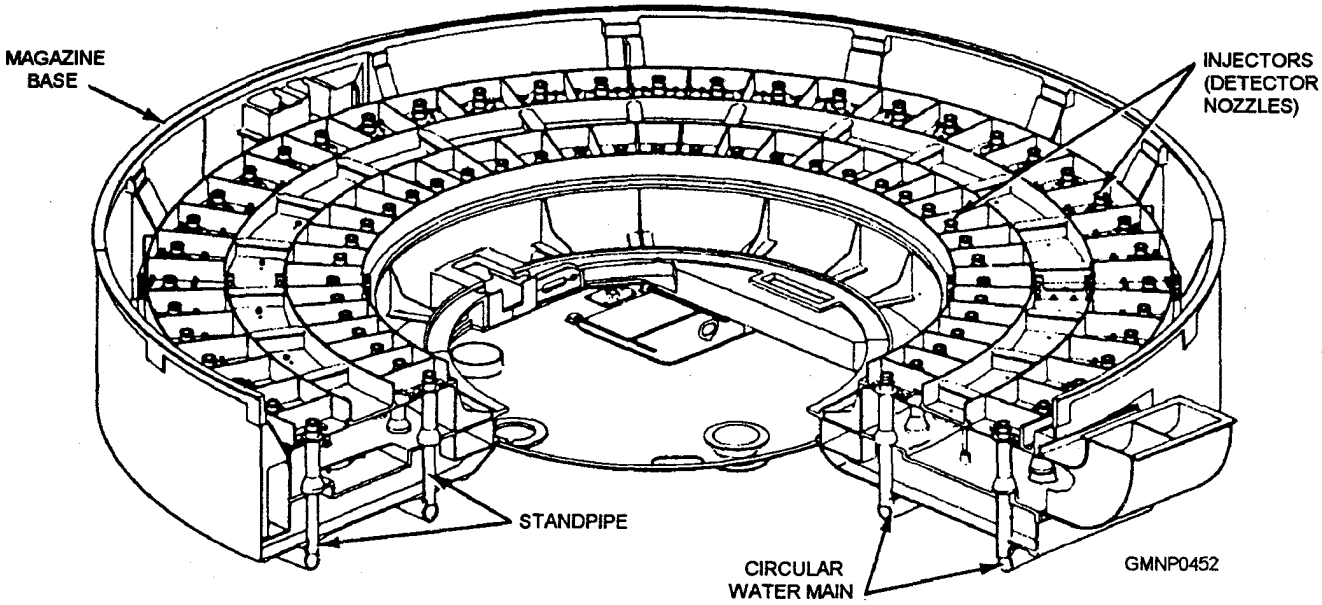

Figure 8-26.—Mk 13 GMLS magazine base; injection system arrangement inside magazine area.

sprinkler system (fig. 8-27). Should a rocket motor ignite, the detector nozzle activates the injection system. Additionally, the blast pressure pushes the blow-in plate down, causing it to fall into the plenum port of the RSR station. Loss of a blow-in plate releases the drop-away plunger of a sprinkler-actuating valve assembly. Water pressure in the sensor line decreases and starts zone sprinkling. The operation is unique to the Mk 26 GMLS.

DRY-TYPE SPRINKLER SYSTEMS

A dry-type sprinkler system is one in which the piping from the outlet side of the main sprinkler control valve up to the sprinkler heads contains no water in a normal or ready state. This piping remains "dry" until the system is activated.

The sprinkler system may be activated automatically or manually. A thermopneumatic system, using HSDs, performs the automatic function. Manual control valves, located at separate local and remote control stations, are used to activate the system manually.

Once the system is activated, it must be secured manually. System design permits it to be activated at one station and be secured from another station.

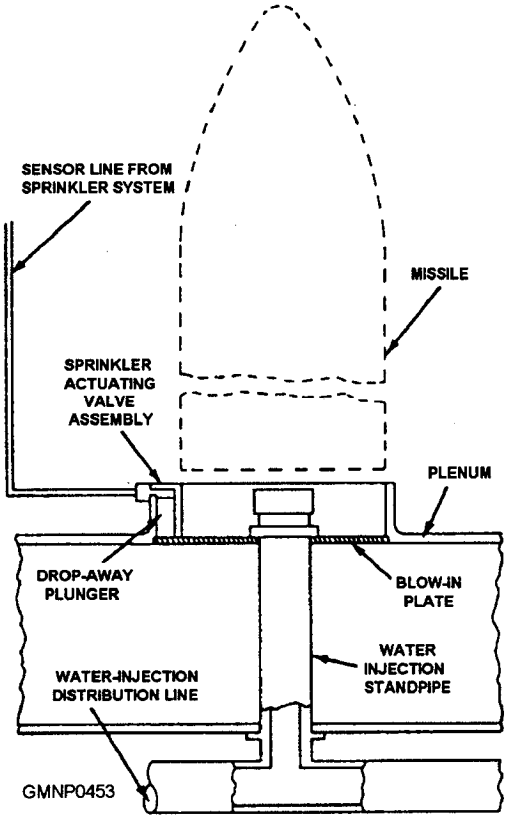

Figure 8-27.—Mk 26 GMLS water injection system.

The Mk 13 GMLS and Mk 41 VLS have dry-type magazine sprinkler systems. A dry-type sprinkler system can be divided into four main equipment areas:

1. Automatic control system
2. Hydraulic control system
3. Main sprinkler control valve
4. Sprinkler alarm system

Figure 8-28 is a general schematic arrangement of the major sprinkler components. Take a moment to study it, as we will refer to it frequently. Locate the four equipment areas.

Automatic Control System

The automatic or thermopneumatic control system used on this sprinkler system is similar to that of a CO_2 system. The fusible link of the sprinkler HSDs (fig. 8-29) melts at 160°F (±3°) and functions the same way as that in the CO_2 system.

Each HSD will also have its own circle seal check valve. Groups of HSDs can be connected to a common manifold. Each manifold will also have its own vented check valve. Transmission line tubing is the 1/8-inch OD rockbestos style.

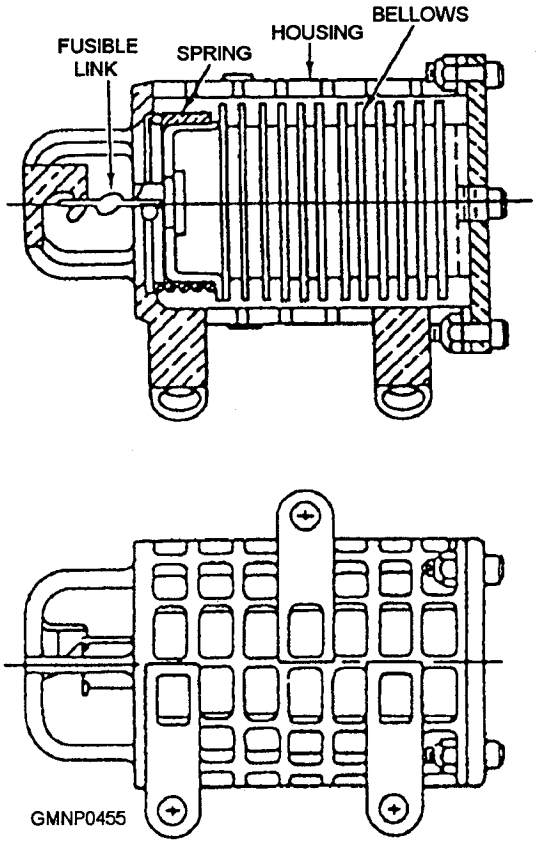

Figure 8-29.—Heat-sensing device (HSD).

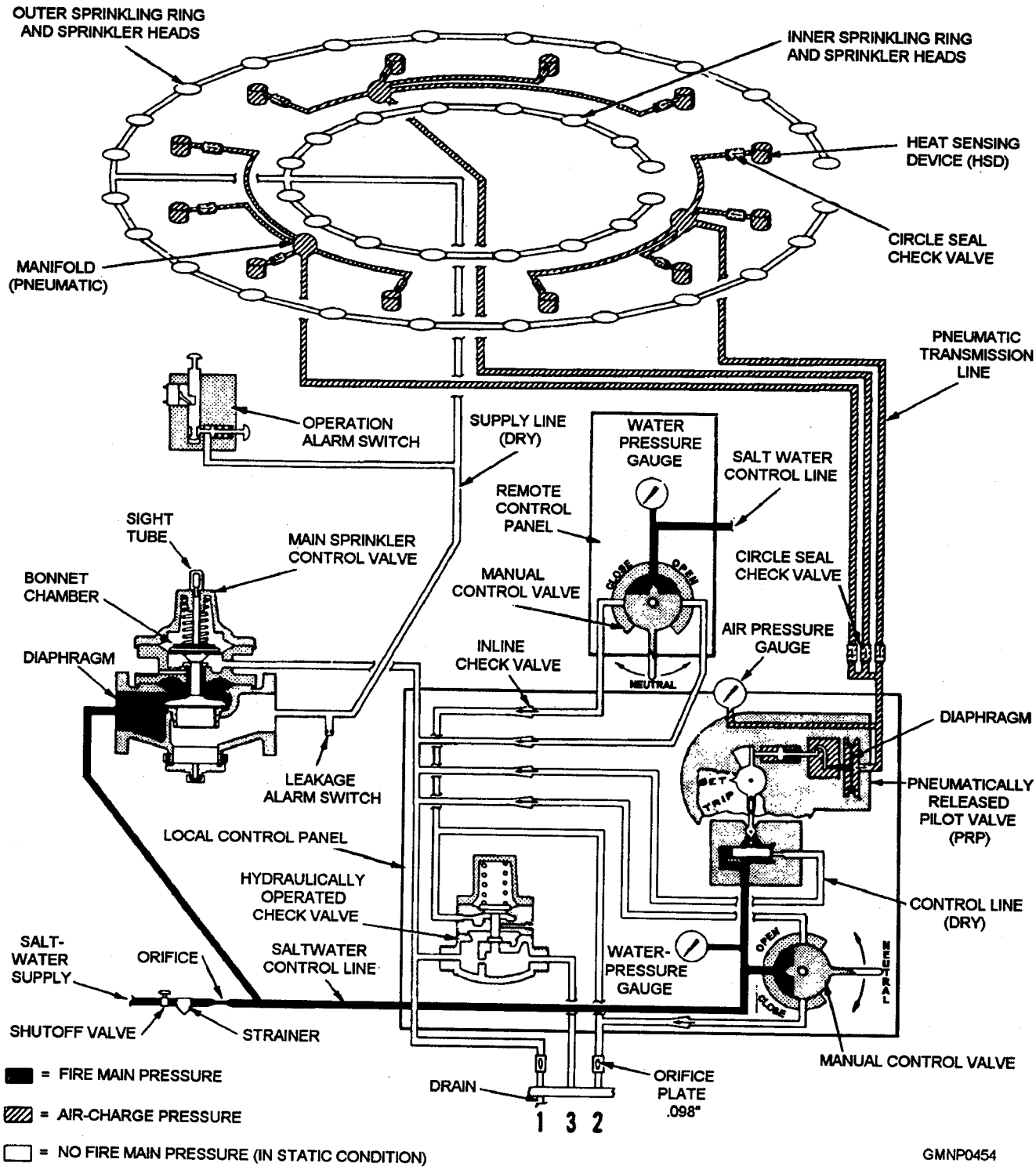

Figure 8-28.—Dry-type sprinkler system schematic; in static condition.

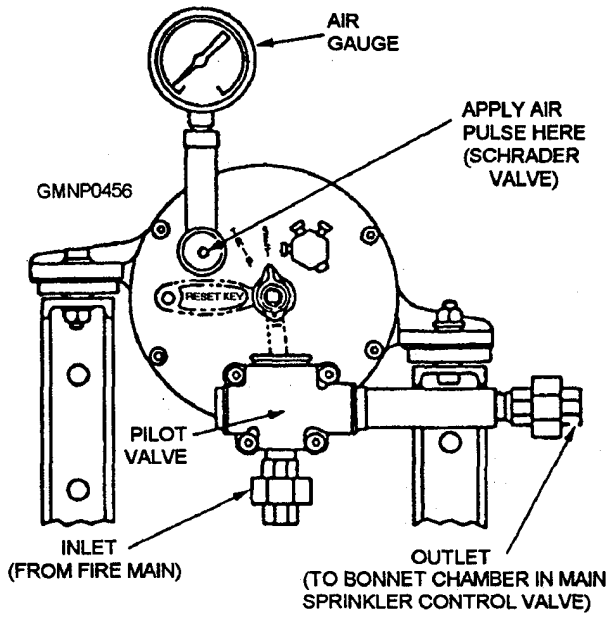

Figure 8-30.—Pneumatically released pilot valve (PRP).

PNEUMATICALLY RELEASED PILOT VALVE.— The pneumatically released pilot (PRP) valve (fig. 8-30) is the main component of the hydraulic control system. It is shock-mounted to the local control panel inside the magazine or RSR. The PRP valve, in response to the pneumatic pressure signal from one or more HSDs, starts automatic sprinkler activation.

The outer body of the PRP valve is a circular bronze housing. Inside the housing is an operating mechanism, a diaphragm, and a compensating vent (fig. 8-31). The operating mechanism is a spring-loaded lever device connected to the diaphragm. The slightly flexible diaphragm is mounted inside an air chamber of the housing. The back side of the diaphragm chamber (or case) is connected to the HSD tubing network. The front side of the diaphragm is open to the interior of the PRP valve housing.

The compensating vent connects to the backside of the diaphragm chamber. Its purpose is to "leak off" any small increases or decreases in air pressure around the diaphragm. These variations are caused by normal space temperature or pressure fluctuations. The slow "leak off" serves to equalize the pressure on both sides of the diaphragm. In doing so, the compensating vent prevents inadvertent PRP valve actuation. The compensating vent is factory calibrated and adjusted, so do not make any "sailor alterations" to it.

Components outside the PRP valve housing include a hydraulic pilot valve, a Schrader valve, and an air-pressure gauge (see fig. 8-30). The pilot valve is installed in a saltwater line of the hydraulic control system. It rotates between a SET (closed) position and a TRIPPED (open) position. The pilot valve must be manually rotated back to its SET (closed) position with a special wrench (reset key).

The Schrader valve is nothing more than an air valve stem (like that on a car or bicycle tire). It is only used during maintenance testing. Internally, it connects to the chamber area of the diaphragm. The air-pressure gauge monitors diaphragm chamber pressure ranging from O to 36 ounces per square inch (osi).

PRP VALVE OPERATION.— As space temperature rises, one or more HSDs activate. They

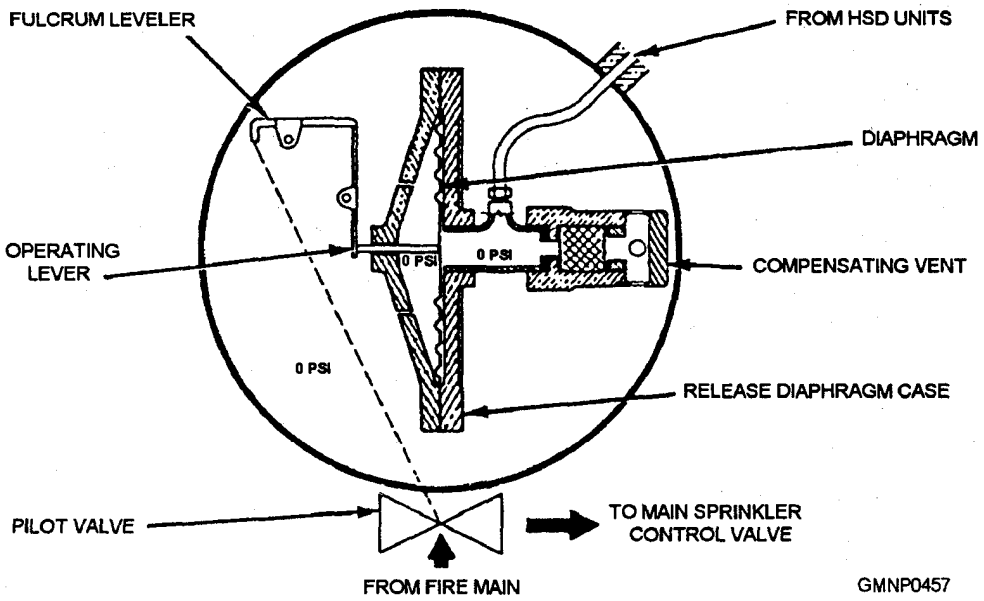

Figure 8-31.—PRP valve; internal schematic.

transmit the air-pressure impulse signal to the backside of the flexible diaphragm of the PRP valve. If the increased pressure is of such magnitude that the compensating vent cannot bleed it off fast enough, the diaphragm will bend or move inward (fig. 8-31).

If the diaphragm moves far enough, it releases the lever of the operating mechanism. In turn, the lever rotates and trips the pilot valve. Salt water starts flowing through the hydraulic control system piping.

Hydraulic Control System

The components of the hydraulic control system are located on the local and remote control panels. (See fig. 8-28.) Various manual shutoff valves and strainers are used in the system. They isolate certain components during maintenance procedures and filter marine growth in the saltwater supply. Most of the valves are manufactured by the Cla-Val Company and are known by their Cla-Val designation.

LOCAL AND REMOTE CONTROL VALVES.— The local and remote manual control valves (fig. 8-32) are lever-operated rotary valves. Each one has three positions: OPEN, NEUTRAL, and CLOSED.

The operating handle has a spring-loaded lever behind it. The lever actuates a locking pin that extends into a recess in the body of the valve. Three separate recesses or holes allow the valve to be locked in any of its three positions. Installed between the handle and the lever is a rectangular locking key. The key is secured in place by easily broken safety wire (lead-wire seal). The locking key prevents accidental sprinkler activation since the handle and lever cannot be squeezed together with the key in place. If they cannot be squeezed, the locking pin cannot be retracted and the handle will not turn.

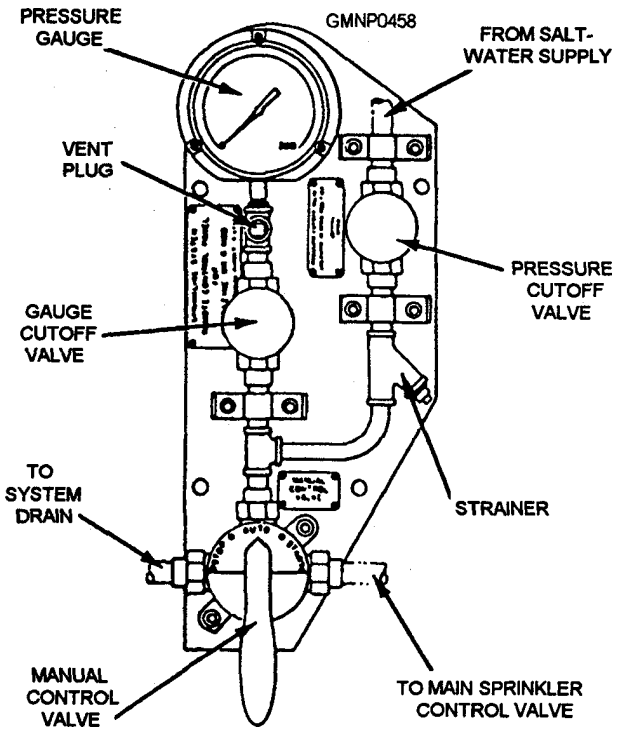

Figure 8-32.—Remote control panel.

INLINE CHECK VALVES.— Four inline check valves, designated Cla-Val No. 81M, are located on the local control board. (See fig. 8-28.) They are spring-loaded check valves that open wide when salt water flows in the proper direction (with the arrow). They close tight when salt water flows against the arrow. By preventing backflow to other stations, these check valves permit the sprinkler system to be activated from more than one station.

HYDRAULICALLY OPERATED CHECK VALVE.— The hydraulically operated check valve is designated Cla-Val No. 81PM-1 (fig. 8-28). It is a normally closed, globe-type check valve that becomes functional only during the stop cycle of sprinkler operation.

When fire main is ported to the upper chamber of the valve, its diaphragm lifts and opens the bottom chamber. Fire main from the top of the main sprinkler control valve is then ported out unrestricted to drain line #3. This action permits the main valve to close under spring pressure, which secures sprinkler operation.

DRAINS AND ORIFICES.— The hydraulic control system has three drain lines and two orifice restrictions (fig. 8-28). The drain lines are normally located so that they can discharge into a portable container (bucket). The lines should be numbered and tagged so that they can be quickly identified.

Drain lines #1 and #2 contain .098-diameter-orifice plates. The orifices (holes), drilled through flat metal plates, serve two purposes. The primary purpose of the orifices is to prevent a buildup of saltwater back pressure in control system piping. Back pressure is normally caused by valve leakage. Eventually, this back pressure could be enough to activate the system. On your daily magazine inspection, you will notice a puddle of water on the deck or in the bucket. Report it so that repairs can be made. The secondary purpose of the orifices is to vent operating pressure from the hydraulic control system when it is returned to AUTO or NEUTRAL.

Main Sprinkler Control Valve

The main sprinkler control valve is located inside the magazine. The valve (fig. 8-33) is a diaphragm-operated, normally (spring) closed, globe-type valve. The upper diaphragm in the bonnet chamber is raised or lifted by a minimum of 40-psi fire main pressure. As it lifts, the lower disc is pulled off its seat. Fire main supply is then free to flow to the sprinkler heads. The upper end of the valve stem can be seen in a glass sight tube. It provides a visual indication of the condition of the stem (stem down, valve closed; stem up, valve open).

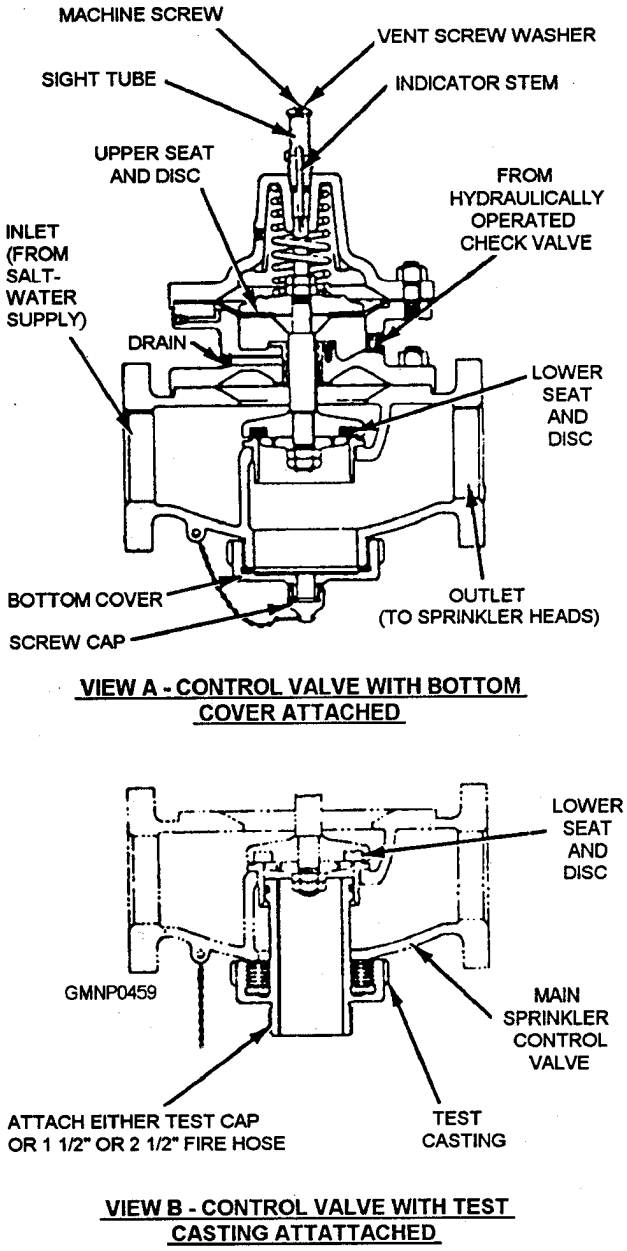

Figure 8-33.—Main sprinkler control valve.

A removable cover is located on the bottom side of the body of the valve. Normally, the cover remains installed. During any maintenance testing or repair work, the cover is unscrewed and replaced with a special test casting (fitting).

The test casting is so shaped that it extends up to the lower seat of the disc. When the disc lifts, the fire main is prevented from flowing to the sprinkler heads by the body of the test casting.

The test casting also has a removable cap. When unscrewed, it may be replaced by a standard fire hose and fitting. After the system activates, the fire main flows through the hose and is discharged over the side. This process flushes the saltwater piping of the hydraulic control system.

The test casting MUST be installed before any work is performed on the sprinkler system. The test casting MUST be removed after the job is completed. These two "rules" are extremely important.

Sprinkler Alarm System

Two water-activated switches serve as the alarm portion of the system. Both units are located on the dry or downstream side of the main sprinkler control valve. (See fig. 8-28.)

The leakage alarm switch (fig. 8-34) is the early warning unit. The seat of the main control valve can become deteriorated through age. A piece of marine growth (like a seashell) can get caught on the seat when the valve closes. In either case, saltwater will leak by and enter the switch body. Because water is a good conductor of electricity, it activates the switch element.

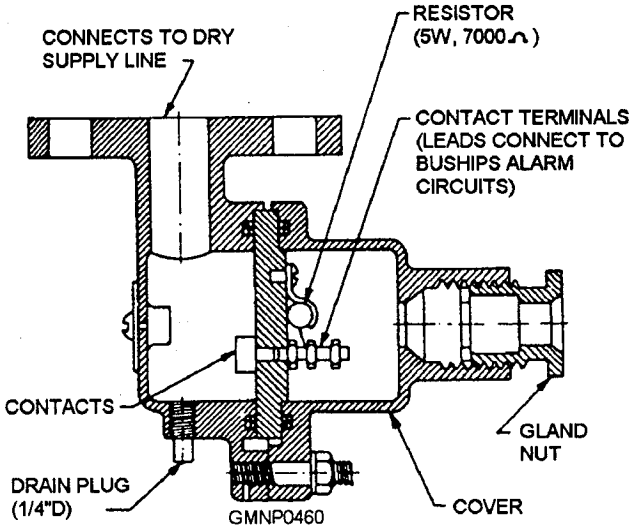

Figure 8-34.—Leakage alarm switch.

An alarm is energized in DC central on the FH (water) circuit.

The operation alarm or flow alarm switch is installed farther downstream from the main valve. (See fig. 8-28.) When the system is activated, fire main pressure actuates this switch to set off other FH alarms in DC central.

Sprinkler System Operation

Refer to figure 8-28 as we describe a remote START and a remote STOP sprinkler operation. At the remote control station, the lead-wire seal is broken and the locking key removed. The handle and lever of the valve are squeezed together and turned to the START position. (When the locking pin engages its recess hole, you can let goof the handle.) Fire main control pressure flows through one of the inline check valves on the local board. (Trace the water flow on the figure.)

The control pressure flows to the top of the main sprinkler control valve, which lifts to start sprinkling operations. Control pressure also flows to the bottom chamber of the hydraulically operated check valve. A small amount of water flows out drain line #1. The other two drain lines will be dry at this time. (If you forgot to put the test casting in, your missiles are getting wet !)

When the system must be secured, the remote control valve handle and lever are squeezed and turned to CLOSED. Fire main control pressure is rerouted through the stop line to another inline check valve. Control pressure enters the upper chamber of the hydraulically operated check valve, causing it to lift. The control pressure in the upper chamber of the main sprinkler valve is then vented. It flows through the hydraulically y operated check valve and out drain line #3. As the pressure decreases, the main sprinkler valve closes.

After the main sprinkler control valve has seated, the remote control valve may be returned to OPEN. Fire main control pressure is then isolated from the hydraulic control system. The hydraulically operated check valve will be closed by its spring as water pressure decreases. Any remaining pressure in the lines is bled through the #1 and #2 orifice drains.

The other operational possibilities will not be described in detail. The major steps for two such sequences are listed below. Refer to figure 8-28 as you run the cycles.

Remote station OPEN and local station CLOSED:

1 Remote—Turned to OPEN

2. Local—Turned to CLOSED

3. Remote—Turned to NEUTRAL

4. Local—Turned to NEUTRAL

Automatic (PRP valve) OPEN and remote station CLOSED:

1. PRP valve—Trips

2. Remote—Turned to CLOSED

3. PRP valve—Reset manually

4. Remote—Tumed to NEUTRAL

Sprinkler System Maintenance

Sprinkler system maintenance is performed periodically under the Planned Maintenance System. We will describe some of the general procedures used during sprinkler testing. ALWAYS refer to the applicable maintenance instructions BEFORE performing ANY work.

NOTE

A test casting is treated as a controlled or accountable item. In other words, the commanding officer or a designated representative maintains custody of the test casting. Before any maintenance is started, two events must occur. First, permission must be obtained from proper authority to begin the work. Second, the test casting must be issued. After the work is finished, the test casting must be turned in. This issue/turn-in procedure assures command that the test casting is NOT accidentally left in the system.

The first rule is to install the test casting. (The chief will INSIST on that!) Connect the fire hose and fitting to the test casting if the system is to be flushed.

The next phase of the operation tests the automatic control system. Connect a tire (or bicycle) pump to the Schrader valve on the PRP valve. Stroke the pump slowly to pressurize the pneumatic system. That may take awhile as the entire pneumatic system is being filled. Do NOT exceed 16 osi on the air-pressure gauge during the pumping. Excess air pressure can damage the PRP valve/diaphragm.

When system air pressure balances or equalizes near 16 osi, disconnect the pump and wait 5 minutes. If the pressure stabilizes within the 8-16 osi range, the system is satisfactorily airtight. A pressure drop below 8 osi indicates an air leak, which must be repaired. Use a leak-detector solution to find loose or cracked transmission line fittings, cracked HSD bellows, and so forth.

If the system is "tight," CAREFULLY depress the stem of the Schrader valve. SLOWLY bleed the system to 8 osi. The PRP valve may, after repeated testings, be damaged if a higher pressure is used during the following step.

The next phase of the operation tests the PRP valve, hydraulic control system, and main sprinkler control valve operation. Full y depress the Schrader valve stem. The air from the front side of the diaphragm will be vented quickly to the atmosphere. The 8 osi of air on the back side of the diaphragm causes it to move. The operating mechanism is released, the pilot valve trips, and the system activates.

The system may be secured normally after it flushes for a few minutes. By the way, we hope you tied the end of the fire hose down. Unsecured, it will whip around under full fire main pressure.

When testing is completed, ensure ALL the air is bled from the PRP valve. That is done by depressing the Schrader valve stem. The test casting is removed as the final step. Take your time during sprinkler system tests. Be sure you are performing each step correctly.

The necessity to perform sprinkler system maintenance correctly cannot be overstressed. To emphasize this point, we will reprint a portion of an article that was published in the *Ships Safety Bulletin. The* Bulletin is a monthly publication prepared by the Naval Safety Center. The information contained in the Bulletin is intended for use by all hands. (The course number given at the end of the article may change, but otherwise the information remains valid.)

MAGAZINE SPRINKLING SYSTEMS

Inadvertent flooding of shipboard magazines are on the increase. Causes appear to be the unfamiliarity of personnel in operating and maintaining sprinkler system components, lack of formal training, improper supervision, and failure to follow prescribed PMS procedures.

In one incident, a group of three magazines was inadvertently sprinkled because the petty officer in charge failed to ensure that proper step-by-step PMS procedures were followed. In completing PMS, the technician restored system lineup before air test pressure was fully bled off the pneumatically released pilot valve (PRP). Personnel error and haste were at the root of this mishap.

NAVSEA OP-4, Vol. 2, Fifth Rev., Change 9, para. 3-22, requires that tests and maintenance of sprinkling systems be conducted in accordance with NAVSEA Technical Manual S9522-AA-HBK-010 and applicable PMS instructions. Formal training is available in the Sprinkler Systems School at the Fleet Training Centers in Norfolk and San Diego. Assistance can also be obtained from the Fleet Technical Support Center (FTSC) in your area.

Actual GMLS Dry-Type Sprinkler Systems

The dry-type, saltwater-operated, magazine sprinkler systems used by the Mk 13 and Mk 26 GMLSs and the Mk 41 VLS are similar. The remote control stations are located outside the launcher control rooms. The local control panels are located inside the magazine center areas. The HSDs and sprinkler heads are equally spaced around the missile cell/RSR areas.

The Mk 41 VLS has its own uniquely designed damage control system known as deluge. The deluge system applies water directly to a missile when a *restrained firing* or canister *overtemperature occurs. Restrained firing is* defined as missile motor ignition and subsequent rupturing of the canister after closure, without missile motion. *Overtemperature* is defined as an internal canister temperature of 190°F or above WITH a missile present. When either of the above conditions exists, a sensing device in the canister sends a deluge request to the deluge control circuits in the launch sequencer (LSEQ), which sends a DELUGE SYSTEM ON command to the motor control panel (MCP). The MCP determines which cell requires deluging and issues a DELUDE ON signal to cause deluging of that particular cell.

A deluge control assembly (fig. 8-35), containing a solenoid control assembly, check valve, pilot valve, deluge control valve, and associated plumbing, is provided for each cell in the module. All eight assemblies (five for the strikedown module) are

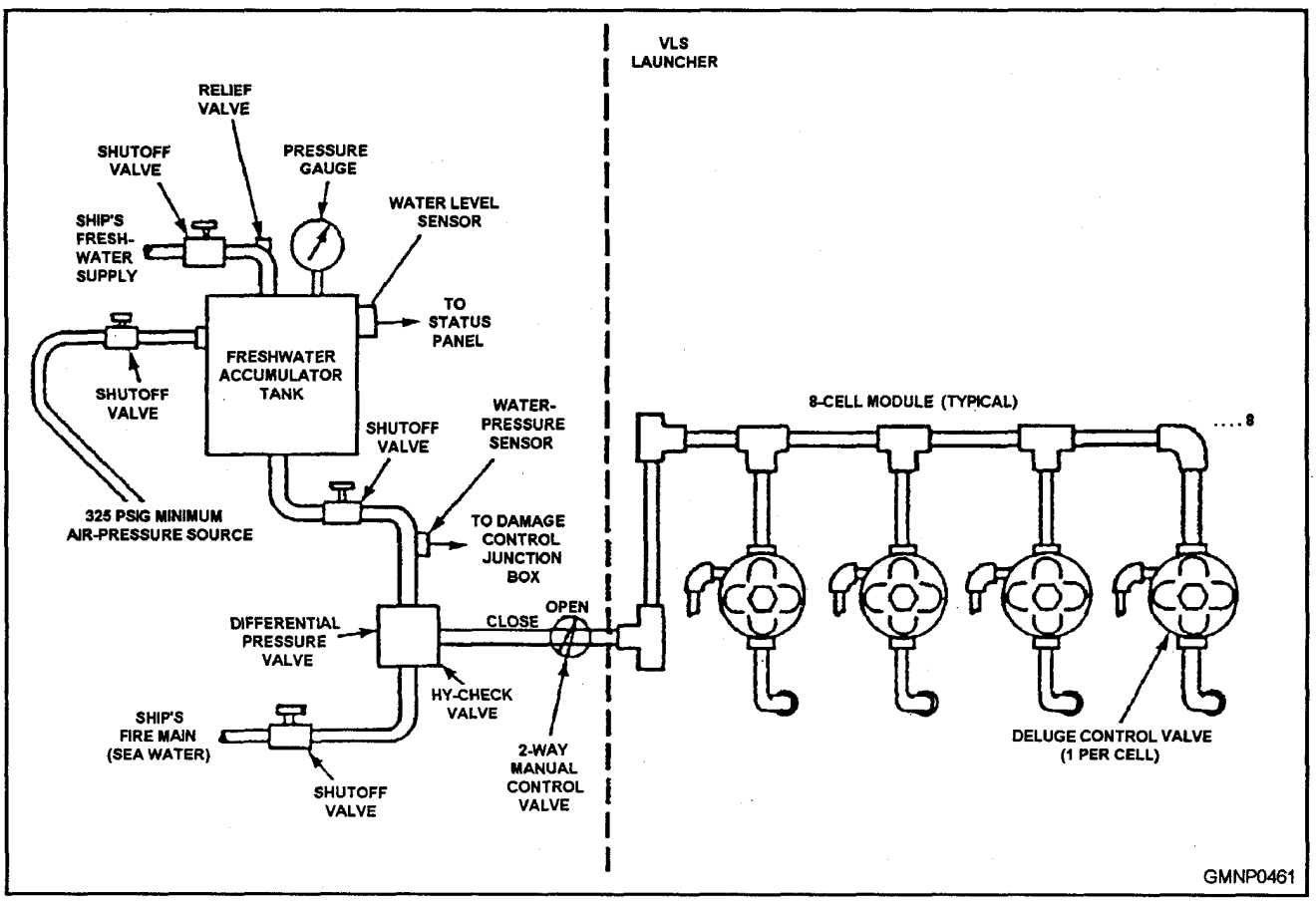

Figure 8-35.—Deluge water supply and components.

mounted on the inboard side of the modules above the upper walkway.

A 28-gallon freshwater accumulator tank is filled with 15 gallons of freshwater and pressurized to 225 psi. An additional 50 gallons of freshwater is present in the launcher supply lines between the accumulator tank and the Hy-check deluge control valve. This water is used first, followed by the water from the accumulator tank. The water level in the accumulator tank is monitored by a sensing device. The sensing device sends a signal to both the status panel and central control station (CCS), causing an alarm indicating that the water level has dropped below 13 gallons. When the accumulator tank pressure drops below 190 psi, a signal is sent to both the status panel and CCS, causing another alarm. When the accumulator tank pressure drops below that of the ship's fire main, the Hy-check deluge control valve switches the system from freshwater to sea water to complete the deluge. The deluge flow rate is 40 gpm.

The deluge is secured by an internal reset signal originated by the launch sequencer (LSEQ) after 100 seconds (±10 seconds) or by manual operation of the DELUGE RESET switch on the status panel. A third method of securing the deluge is by operation of the deluge two-way manual control valve, which secures the saltwater supply.

When a deluge condition is initiated in a particular cell, any cell in that module which has been deluged before that time will be deluged again. This deluge operation will continue until the deluged canisters have been replaced. Also, any empty canisters in the module concerned are deluged.

ENVIRONMENTAL CONTROL SYSTEMS

LEARNING OBJECTIVES: Explain the role of environmental control systems used in guided-missile launching systems. Identify the major components or systems used in this process.

All GMLSs contain a variety of auxiliary systems that protect the launching equipment and missiles from excessive environmental conditions. Environmental control systems perform the basic functions of heating and cooling. Ship operations in the tropical climates will create high internal magazine temperatures and humidity levels. These conditions affect the reliability of missile propellant grains and play havoc with solid-state electronic control circuits. The colder climates also affect missile propellant performance and launcher component operation. If ice forms around movable guide-arm components, it could feasibly freeze or lock those components in place.

In many cases, the GMLS auxiliary systems rely on the ship's "hotel services" to operate. These services are the responsibility of the ship's engineering department. Steam from the boilers and chilled water from the cooling plants are two such services supplied to our equipment. In such cases, a little interdepartmental cross-training can be valuable.

ANTI-ICING SYSTEMS

Every GMLS has some type of auxiliary system that prevents the accumulation of ice formations around critical moving components. One such system is referred to as an anti-icing or circulating system. It is used to circulate a heated fluid throughout the equipments exposed to the weather. Another type of system uses an electrical coil or strip-type heating element to protect the exposed equipment.

Regardless of style, each system has the same end purpose-to melt the ice. Each GMLS also has its own version of an anti-icing system. We will briefly describe atypical system and then point out any unique differences between the GMLSs.

A Typical Anti-Icing System

The typical anti-icing system is an enclosed pressurized fluid system. Its main component is a heat exchanger tank (fig. 8-36). It is normally located in an auxiliary equipment room near the magazine and serves as a reservoir and heater for the anti-icing fluid. This fluid is normally a 50:50 mixture of ethylene glycol and water. The solution is similar to the antifreeze mixture in the radiator of your car.

Inside the heat exchanger tank is a coiled network of steam tubes. They are supplied by ship's auxiliary steam from the main or auxiliary (donkey) boilers. The tubes transfer heat to the anti-icing fluid as it (the fluid) flows through the tank. An air bladder (accumulator) inside the tank is charged with low-pressure air. The bladder acts on the fluid to keep a constant pressure in the system. The bladder also compensates for changes in fluid volume caused by temperature variations and minor leakage.

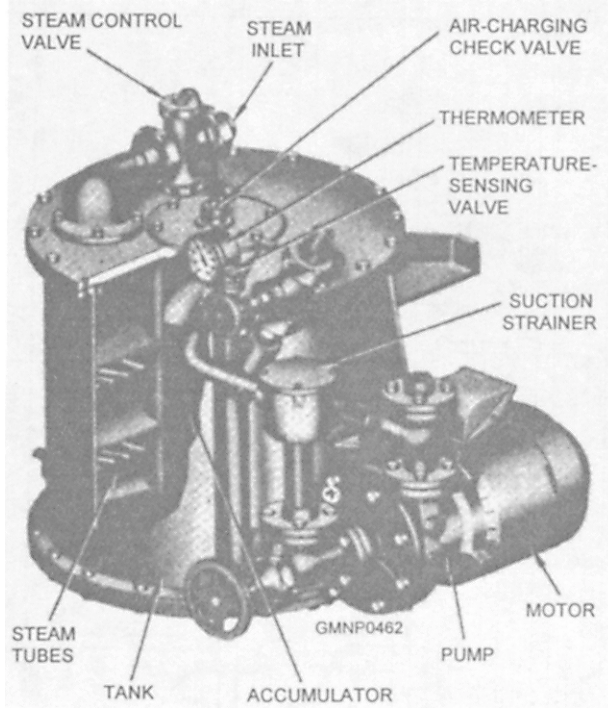

Figure 8-36.—Anti-icing heat exchanger tank.

A steam control valve and a temperature-sensing valve monitor and regulate the temperature of the fluid. The sensing valve is installed in the return fluid line of the system and connects to the steam control valve. The sensing valve is adjusted to open and close the steam control valve within a selected temperature range. This action automatically maintains the anti-icing fluid within the desired heat range. Although the design specifications of each GMLS will vary, return fluid temperature is generally maintained between 40°F and 60°F. A thermometer is installed in the return line to monitor the temperature of the system.

A small electric motor is used to drive a centrifugal-type pump. The pump draws heated fluid from the tank and discharges it into the system. The supply and return fluid piping networks route the fluid throughout the critical areas of the GMLS. The piping system includes the normal variety of flow control, relief, and air-bleed valves. Strainers and distribution manifolds are also used. In many systems, anti-icing fluid is circulated through special internal passageways drilled or machined in a component.

In addition to circulating heated fluid, anti-icing systems can also run unheated. This optional feature circulates a cool fluid mixture used to help dissipate the heat created by a missile blast.

The anti-icing system in the Mk 26 is also used for missile blast cooling. When blast cooling is selected and a missile is fired, the system starts and runs automatically to circulate anti-icing fluid in the guided-missile launcher, blast door, jettison devices, blowout plates, and platform. The system runs for approximately 10 minutes after the last missile is fired.

Actual Anti-Icing Systems

The Mk 13 Mod 4 GMLS uses a heat source other than auxiliary steam. Twelve electrically controlled immersion heating elements are located within the heat exchanger tank of the Mk 13 Mod 4 GMLS. Each element is a 1/2-inch copper sheath about 6 feet long. It is bent into a loop that projects about 1 1/2 feet into the tank. The copper sheaths are heated by single-phase, 440-VAC, 60-hertz power. They are energized through a heater-controller panel located near the launcher control room. Tank fluid is heated as it flows across the elements.

The Mk 41 VLS anti-icing system is designed to prevent a buildup of snow or ice that might prevent a cell or uptake hatch from opening during launch operations. The anti-icing system does not provide coverage of the strikedown hatch. Anti-icing must be manually enabled for each module individually at the launcher status panel.

The main items of the anti-icing system are heaters and thermostats built into the uptake and cell hatch assemblies (fig. 8-37). The uptake hatch contains one tubular 14-watt-per-inch heater element and two thermostats that activate the anti-icing system when the temperature falls within the 33°F to 43°F range. Each cell hatch has three heater elements; two of the heaters are 175-watt cartridge elements that are built into the hinge brackets on either side of the trunnion. The third heater is a 25-watt-per-inch tubular element built into the cell hatch cover and located around the perimeter of the hatch.

AIR-CONDITIONING AND VENTILATION SYSTEMS

Air-conditioning and ventilation systems are used in GMLS areas for the general safety of equipment, personnel, and the ship. The purpose of these systems is to circulate air around vital system components. This circulated air maintains normal temperature and humidity levels within a space. Air-conditioning systems use ship-supplied chilled water, a cooling-coil unit, and fan-blower units to circulate cool air. Ventilation systems only use a fan-blower unit to circulate ambient (surrounding) temperature air.

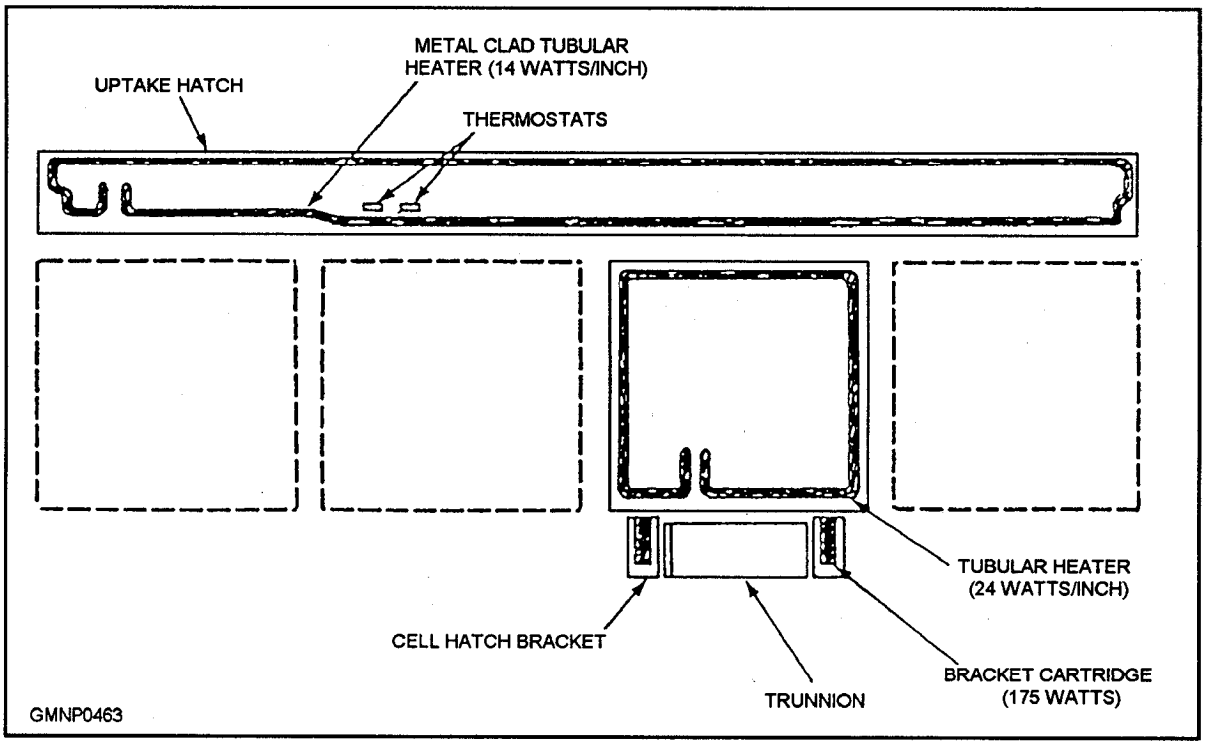

Figure 8-37.—Module hatch heater elements.

Launcher control rooms and missile magazines are always air-conditioned spaces. Some GMLSs use a separate ventilation system to cool their launcher carriages. Ventilation systems are usually thermostatically controlled to maintain space temperature ranges between (an average) 70°F and 100°F. Also, a majority of air systems have cutoff valves installed somewhere in the supply and exhaust lines. These valves should bear a Circle William damage control classification. Learn where these valves are located. They must be closed during nuclear, biological, and chemical (NBC) drills. Additionally, make SURE all air filters are cleaned properly on a strict maintenance schedule. That will keep these systems operating at peak efficiency.

Magazine air-conditioning/ventilating systems can also serve an important secondary purpose. Consider a missile magazine with an installed or fixed CO_2 system. If fire breaks out, the space will be flooded with CO_2 extinguishing agent. The air system must be secured quickly to prevent the CO_2 from being drawn out of the space. Normally, the CO_2 system has a pressure-operated switch that interconnects to the electrical circuit of the air system. When the CO_2 system activates, the switch secures the air system (turns off the blower).

The air system should not be turned on for at least 15 minutes after CO_2 discharge. This 15-minute time period serves as a cool-down period. The cool-down period prevents hydraulic fluids and lubricants from re-igniting when exposed to a new air supply. After the cool-down period, the space should be ventilated a full 15 minutes before anyone enters it. The air system removes the CO_2 gas and restores air to a life-sustaining level.

We will briefly examine the various air-conditioning and ventilation systems used in the GMLSs.

Mk 13 Mods 4 and 7 GMLSs

The magazine ventilating systems on the Mk 13 GMLSs use air, which is forced into the magazine, from the ship's air-conditioning system. It cools the missiles and inner structure (center column) equipment areas (fig. 8-38). Air enters the magazine through intake ducts under the cells. It flows up around the missiles and enters the inner structure through ventilation screens at the top of the structure. The exhaust ducts are in the center of the base.

Mk 26 GMLS

The Mk 26 GMLS and Mk 41 VLS use standard ship-operated air-conditioning units to cool their spaces. The Mk 26 has one unit that supplies the ICS and another that supplies the magazine.

GMLS SAFETY SUMMARY

LEARNING 0BJECTIVES: Identify the safety precautions personnel use while working on guided missile launching systems.

The object of the last section of this chapter is to introduce you to the topic of safety. Specifically, we will emphasize certain safety precautions and warnings that apply, in general, to shipboard GMLS operations.

The Navy distributes many safety-related publications, periodicals, and special messages. Their contents are devoted entirely to important safety practices. Some are general in nature. Others deal with more specific precautions related to a single equipment or knowledge area. Certain general ordnance safety publications are also included in the GM3 through GMC bibliography list (NAVEDTRA 10052, current revision). These are references you should study when preparing for an advancement exam.

Each launching system comes with a set of "books" called ordnance publications, or OPs for short. (They will be discussed in more detail later in this manual.) Published in a series of volumes, a GMLS OP describes the system and gives its operating procedures. Information and instructions needed to keep the equipment in proper working order are also included. Volume 1, which gives the description and operation of the GMLS, will always contain a section entitled "Safety Summary." The safety summary is usually given in two parts: (1) general safety precautions and (2) specific safety precautions.

GENERAL SAFETY PRECAUTIONS

General safety precautions, as the name implies, have wide applications in a variety of work-related situations. They pertain to the use of tools and to the exposure to high voltages and pressures. Additionally, they address the general safe handling of explosives and other volatile materials. Study these precautions so that

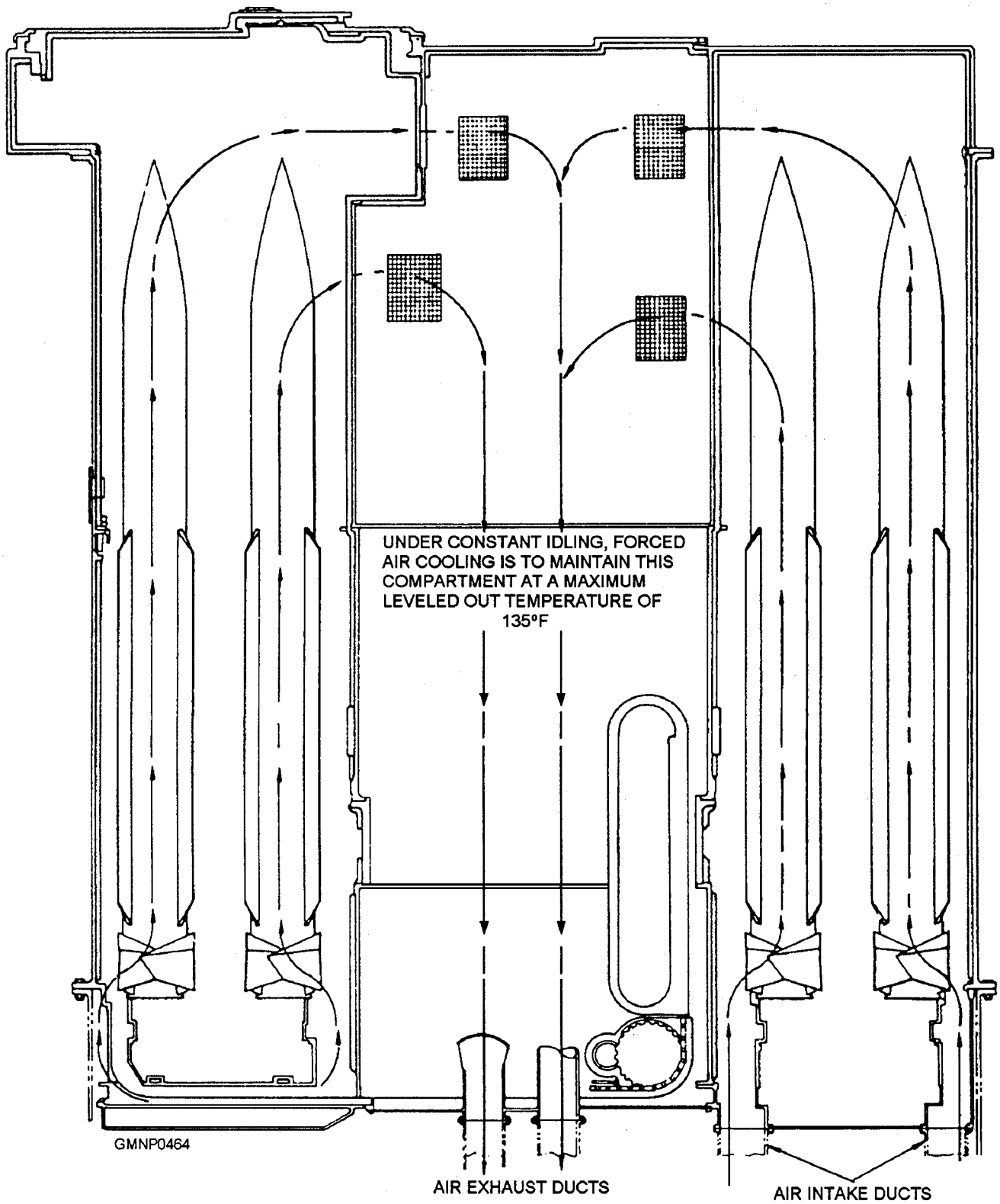

Figure 8-38.—Mk 13 GMLS magazine ventilation system.

you will recognize the potential hazards involved. Apply these precautions during all phases of operation and maintenance. The following precautions are a small sampling of warnings that pertain to all the GMLSs.

Establish Communications

Do not activate the launching system until communications have been established between the safety observer and the launcher captain.

High-Voltage Hazard

Be careful when working in lethal voltage areas. Do not work on live circuits unless absolutely necessary. Under some conditions, dangerous voltage potentials may exist in electronic circuits after the power is shut off. When such potentials are suspected, discharge the appropriate components before touching them. Do not perform work in a lethal voltage area under any circumstances without the presence of at least one person able to give first aid in the event of electric shock.

Resuscitation

Do not work with or near high voltages unless you are familiar with the methods of artificial respiration. Obtain resuscitation information from the appropriate authority.

Hydraulic Pressure Hazard

Always bleed the hydraulic systems of pressure before attempting to remove or disassemble any hydraulic component. Make sure system pressure is zero by observing installed gauges.

Hydraulic Fluid Hazard

If clothing becomes drenched with hydraulic fluid, immediately change into dry clothing. Hydraulic fluid is injurious to health when in prolonged contact with skin. It is also a fire hazard. Immediately wipe up spilled hydraulic fluid.

High-Pressure Water Hazard

Do not perform any maintenance procedures on the water injection system until all pressure in the lines has been dissipated. Do not work directly over water injection nozzles. Do not tamper or drop anything on water injection nozzles.

High-Pressure Air Hazard

Do not point a jet of high-pressure air at any part of a human body. The jet may be fatal.

High-Pressure Nitrogen Hazard

Use only approved nitrogen to charge accumulators. Never use oxygen or compressed air. A mixture of hydraulic fluid and oxygen is explosive. When charging accumulators, do not disconnect the charging line until it has been bled. High-pressure nitrogen is present in the charging line.

Carbon Dioxide (CO_2) Hazard

Suffocation hazard exists. Before entering the magazine area, unlock and close shutoff valve(s) for CO_2 system(s).

Live Missile Hazard

Return any live missile to the magazine before troubleshooting components in the launcher area.

Explosion Hazard

Do not take naked lights, matches, or other flame-producing apparatus into a compartment containing explosives. Smoking is not permitted at any time within these compartments.

Moving Equipment Hazard

When troubleshooting, shut down the power-drive motors of equipment not involved in the malfunction or casualty. After locating a fault, shut down all power-drive motors; then proceed with corrective actions.

Launcher Area Hazard

Ensure that the safety observer's safety switch (or deadman's key) is installed before entering the training area/circle of the launcher. Do not leave the switch unattended.

Unauthorized Panel Operation

Do not allow unqualified or unauthorized personnel to operate the control panels. Trainees or other persons undergoing instruction will operate panels under the strict personal supervision of a qualified and responsible operator.

Servicing, Adjusting Hazard

Do not reach into any equipment or enter the magazine structure to service or adjust components except with someone who can give first aid.

SPECIFIC SAFETY PRECAUTIONS

Specific safety precautions and warnings appear twice in a GMLS OP. They are stated near the

equipment description or operating procedure to which they apply. They are also repeated in the second part of the safety summary for emphasis.

We will not attempt to list every specific safety precaution. The warnings given in the following paragraphs, however, can generally be applied to all the GMLSs.

Warning bells or horns will be sounded to alert all personnel of impending equipment movement. This movement could happen at any time. Do not start the power-drive motors without clearance from the safety observer. Verify all personnel and equipment are clear before moving the launcher.

Remove and retain safety switch handles or keys. That prevents the power-drive motors from being started when you are working on or around power-operated equipment. The launching system must be deactivated before personnel are permitted to fold missile fins inside the launcher area.

If a missile is on the guide arm, do not retract the aft-motion latch unless the hoist pawl is in 'full engagement with the aft missile shoe. Personnel must not pass or crawl through an open blast or magazine door with the system energized. Observing the clinometer, jettison on the down roll.

SAFETY SUMMARY CONCLUSION

Even though GMLSs are complex machines, they can be operated and maintained in a relatively safe manner. Safety precautions DO work if the proper equipment and procedures are used. All applicable satiety warnings must be strictly followed. Always use your common sense and do not skylark.

All equipment operations should be performed carefully, methodically, and without hurrying. Greater individual and team effectiveness will be developed by increased familiarity with the proper and safe methods of accomplishing a task. Should a malfunction occur or an incorrect indication appear on a control panel, STOP the operation immediately. Then determine whether it is safe to proceed. Consider the effect of your decision on both equipment and personnel. Do NOT be afraid to ask for help.

Cleanliness and good housekeeping practices in all work areas are important. They are major factors in effective accident prevention. Keep tools in good working order, and always return them to a proper storage place.

Changes, modifications, or alterations to any ordnance equipments should not be made unless explicit authority from NAVSEA or another cognizant authority is obtained. Safety devices found on GMLS equipment were installed for the protection of personnel and equipment. These devices should never be removed, disabled, or bypassed. Specific authorization from the commanding officer or a designated representative is required if a safety device must be altered. Adequate notices should be posted to warn (and remind) personnel of the potential hazard.

This chapter only scratches the surface of safety. You will see more about safety throughout the rest of this manual. You will be involved with it everyday of your career. Become familiar with ALL the ordnance safety publications, and set the example in following them.

SUMMARY

In this chapter, we discussed the secondary and auxiliary functions of the major GMLSs. This discussion was primarily directed toward the procedures used in jettisoning and strikedown operations. We covered various fire suppression systems, including the CO_2, water injection, dry-type, and Mk 41 deluge systems. Environmental control systems—anti-icing and A/C-were also covered. The operational and safety requirements for the different types of sprinkler systems were also discussed.

We concluded the chapter with a safety summary on the GMLSs and a section on general safety precautions. It would probably serve you well to reread this section on safety.

In the next chapter, we will discuss the common electrical and electronic components and their schematic symbols, used in the current GMLSs.

CHAPTER 9

SMS GUIDED MISSILES, AERODYNAMICS, AND FLIGHT PRINCIPLES

Weapon systems consist of four major equipment areas-the Detect, Direct, Deliver, and Destroy units. For the last two chapters, we have concentrated on the Delivery units —the GMLSs. We will now discuss the units that Destroy —the guided missiles.

The purpose of this chapter is to familiarize you with the basic principles associated with guided missiles. We will study the major systems of a missile and learn why and how the missile flies. You should then be able to apply these basic principles to the missiles used in the surface missile system (SMS) in the fleet. Pay attention to the terminology of these new equipments.

STRUCTURE

LEARNING OBJECTIVE: Recall the basic structure of a missile to include its three primary sections.

Missiles, for the most part, are made up of several sections or shells (fig. 9-1). They are machined from metal tubing and contain the essential units or components of the missile. Sectionalized construction of a structure has the advantage of strength with simplicity. It also provides for easier replacement and repair of the components, since some sections are removable as separate units. The sections are joined by various types of connections which are also designed for simple operation. Covers and access doors are often installed on the outside of the structure to provide easy access to key interior components.

The missile exists to carry the warhead to the target. Therefore, the structure is designed around the size and weight of the warhead. The structure of the missile must be as light and compact as possible, yet strong enough to carry all the necessary components. The structure must also be able to withstand the forces to which it will be subjected. These "forces" will be encountered during preflight shipping, handling, and stowage periods. Other forces, such as gravity, heat, pressure, and stresses of acceleration, will also be experienced in flight.

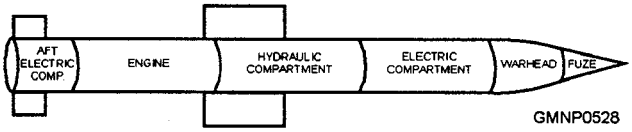

Figure 9-1.—Sectionalization of a missile.

In most missiles, the main body is a slender, cylindrical structure capped on either end by nose and tail sections. Several types of nose sections can be used (fig. 9-2). If the missile is intended to fly at supersonic speeds (greater than the speed of sound), the forward (nose) section usually is designed with a pointed-arch profile. The sides taper in lines called "ogive" curves. With missiles intended for subsonic speeds, the nose is often not as sharp or even blunt. The forward section of most SMS missiles is covered by a "radome." This type of nose protects a small radar antenna inside the missile.

Typical structures (airframes) contain a main body that terminates in a flat base or tail cone. When the contour of the tail cone is slightly streamlined at the rear, it is said to be "boattailed." Attached to the body (also known as the skin or outer surface) are one or more sets of airfoils. These airfoils (wings, fins, or control surfaces) contribute to in-flight stability, provide lift, and control the flight path of the missile.

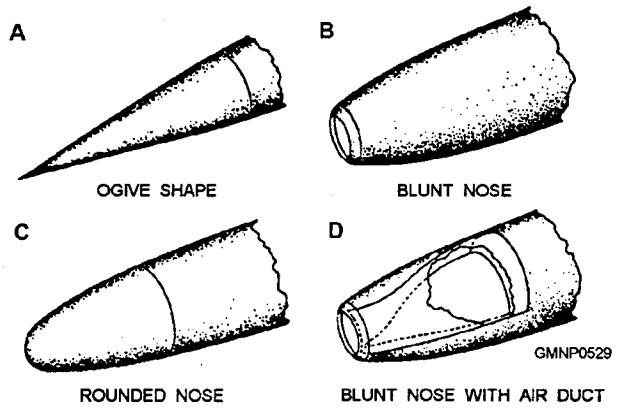

Figure 9-2.—Missile noses.

The design configuration of a particular missile depends on various factors. Consideration must be given to the speed, the operating range, and the turning rate of the missile. 'The purpose of the missile and the medium(s) through which the round will travel (such as water, air, or a combination of the two) are other important factors. The location of the primary control and/or lifting surfaces also determines the configuration of the missile. Two popular designs are wing-control and tail-control missiles (fig. 9-3). Wing-control airfoils are mounted at or near the center of gravity of the structure. Tail-control airfoils are located at the rear of the missile.

Most SMS missiles have dorsal fins and tail-control surfaces (fig. 9-4). The dorsal fins are attached to the main body of the missile. These stationary surfaces are used to provide stability and (some) lift during missile flight. The tail-control surfaces normally are folded during stowage. These surfaces are erected (unfolded) just before launch. The tail-control surfaces are turned or pivoted to control (steer) the missile along its flight path.

CONTROL

LEARNING OBJECTIVE: Recall the aerodynamic forces and basic motions that impact on the design and performance of a missile.

Before we examine the control system of a missile, it is important to understand a little about aerodynamics. Aerodynamics is the science that deals with the motion

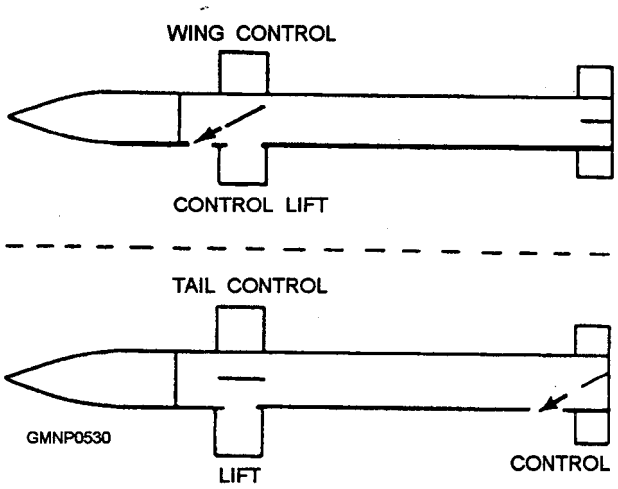

Figure 9-3.—Missile airframe design with respect to control surface location.

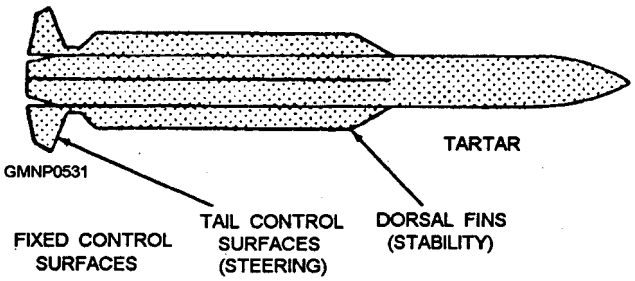

Figure 9-4.—Missile configurations.

of air and other gases. It also considers the forces acting on bodies moving through these gases. The principles of aerodynamics that apply to the operation of most aircraft also apply to high-speed missiles.

AERODYNAMIC FORCES

The principal forces acting on a missile in level flight are thrust, drag, weight, and lift. Like any force, each of these is a vector quantity that has magnitude and direction. These forces are shown in figure 9-5.

Thrust is directed along the longitudinal axis of the missile is the force that propels the missile forward at speeds sufficient to sustain flight.

Drag is the resistance offered by the air to the passage of the missile through it. This force is directed rearward.

Weight is comparable to the force of gravity acting on missile. This force is directed downward to the center of the Earth.

Lift is an upward force that supports the missile in flight. Lift opposes the force of gravity and is directed perpendicular to the direction of drag. Lift is the force that concerns us the most.

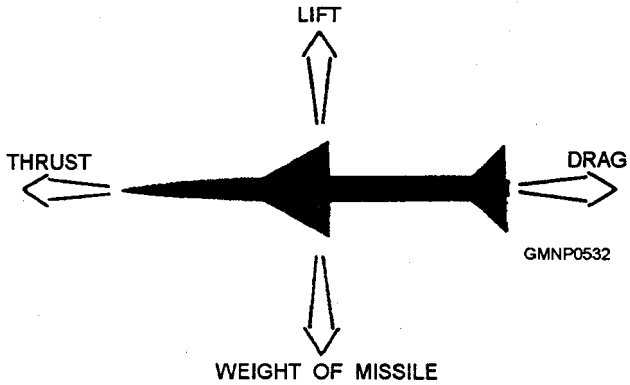

Figure 9-5.—Forces acting on a moving missile.

Lift is produced by means of pressure differences. The primary requirement for lift is that the air pressure on the upper surface of an airfoil (wing or fin) be less than the pressure on the underside. The amount of lifting force produced is dependent, to a large extent, on the shape of the airfoil. Additional factors also determine the amount of lift. The airfoil area and the angle at which its surface is inclined to an airstream affect lift. The air speed and air density passing around the airfoil are two more factors. The airfoil that provides the greatest lift with the least drag in subsonic flight has a curved (or camber) shape (fig. 9-6).

Some standard airfoil terms are also included in the drawing on figure 9-6. The foremost edge of the airfoil is the leading edge. The rear edge is the trailing edge. A straight line between the leading and trailing edges is the chord. The large arrow (in view B) indicates relative wind or the direction of airflow in respect to the moving airfoil. The angle of attack is the angle between the chord and the direction of relative wind.

As relative wind strikes the airfoils tilted surface, air flows around its upper and lower surfaces. Different amounts of lifting force are exerted on various points of the airfoil. The sum of all these forces is equal to a single force acting on a single point and in a particular direction. This point is the center of pressure. From here, lift is in a direction perpendicular to relative wind.

The dynamic or impact force of the relative wind against the airfoils lower surface contributes to lift. However, the major portion of the lifting force is obtained from the pressure differential above and below the airfoil. The angle of attack causes the air flowing over the airfoils upper surface to travel a greater distance. The farther the air has to travel, the faster it moves. Faster speed creates a lower pressure. Therefore, since the air pressure above the airfoil is less than that below it, the result is lift. The magnitude of the lifting force is proportional to the pressure difference.

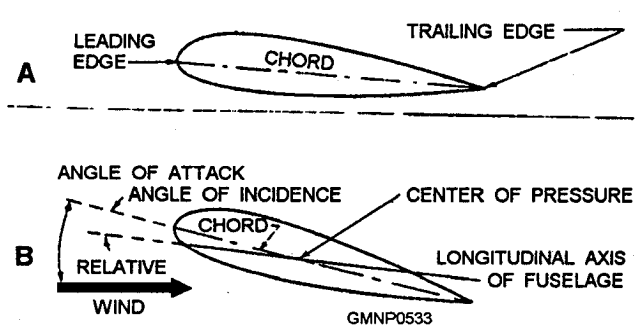

Figure 9-6.—Wing cross section.

BASIC MOTIONS

Like any moving body, a guided missile executes two basic types of motion-rotation and translation. In pure rotation, all parts of the missile pivot around the center of gravity. In movements of translation, or linear motions, the center of gravity moves along a line.

Missiles, like other aircraft, have six degrees or dimensions of freedom (movement). To describe these motions, we use a reference system of lines or axes. These axes intersect at the missile's center of gravity.

A missile can make three kinds of rotary movement—pitch, roll, and yaw (fig. 9-7). Pitch, or turning up and down, is rotation about the lateral axis. The lateral axis is the reference line in the horizontal plane and is perpendicular to the line of flight. The missile rolls, or twists, about the longitudinal axis. This axis is the reference line running through the nose and tail. The missile yaws, or turns left and right, about the vertical axis.

A missile can make three kinds of translation or linear movements. For example, a sudden gust of wind or an air pocket could throw the missile a considerable distance from its desired trajectory. This displacement could happen without causing any significant rotary or angular movements. Any linear movement can be resolved into three components-lateral, vertical, and along the direction of thrust.

The missile must sense and correct for each degree of movement to maintain an accurate and stable flight path. This stable flight path is often called "attitude" and refers to the position of the missile relative to a known (horizontal or vertical) plane. The control system contains various components used to maintain a proper flight attitude.

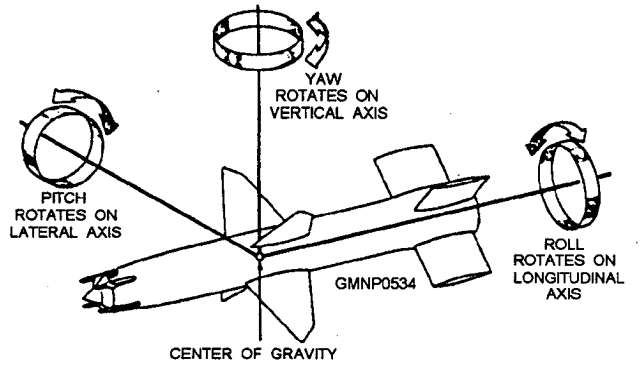

Figure 9-7.—Rotary movements of a missile: pitch, roll, and yaw.

Gyroscopes

Gyroscopes are very important control system components. Any spinning object (a top, a wheel, etc.) is fundamentally a gyro. It can be defined as a mechanical device containing a spinning mass. It is mounted in such a manner as to have either one or two degrees (directions) of freedom.

A gyro that has two degrees of freedom is referred to as a free gyro. Its rotor is mounted in gimbals so it can assume any position. View A of figure 9-8 shows a free gyro that can turn on two axes, Y and Z. View B shows a different type of gyro. It is called a rate gyro and has only one degree of freedom or axis.

Gyros have two useful characteristics in guided missiles. First, the gyro rotor tends to remain fixed in space if no force is applied to it. The idea of maintaining a fixed plane in space is easy to understand. When any object is spinning rapidly, it tends to keep its axis pointed in the same direction. A toy top is a good example. As long as it is spinning fast, it stays balanced on its point. A gyro, like a spinning top, resists the tendency of gravity to change its spin axis. The resistance of a gyro against any force which tends to displace the rotor from its plane of rotation is called rigidity in space.

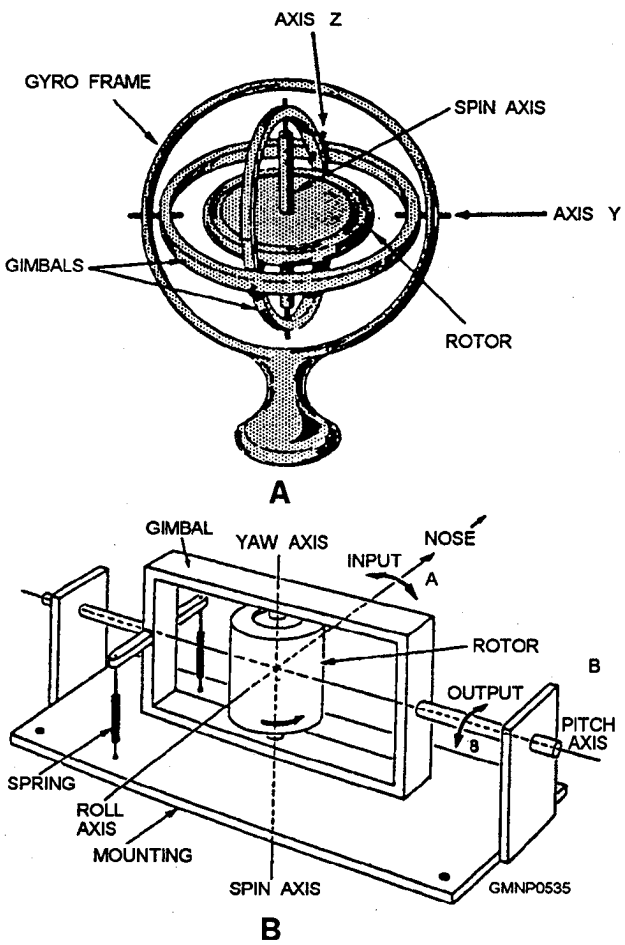

Figure 9-8.—Gyroscopes: A. Free gyro has two degrees of freedom, B. Rate gyro has one degree of freedom.

The second characteristic of a gyro is that its spin axis tends to move at right angles to the direction of an applied force. This action can be seen in figure 9-9. When a downward force is applied at point A, the force is transferred through pivot B. This force causes a downward movement at point C.

That movement, at a right angle to the direction of the applied force, is called precession. The force associated with this movement (also at right angles to the direction of the applied force) is called the force of precession.

Free Gyros in Guided Missiles

To see how free gyros are used in guided missiles to detect changes in attitude, refer to figure 9-10. Let us assume the missile shown in view A has a horizontal design attitude. A gyro within the missile has its spin axis in the vertical plane and is also gimbal-mounted. Any deviation in the horizontal attitude of the missile does not physically affect the gyro. In other words, the missile could roll and the gyro will maintain its position in space.

View B illustrates the last point. The missile has rolled about 30° but the gyro remains stable. If we could measure this angle, we would know exactly how far the missile deviated from the horizontal plane. This information could then be used to change the position of the control surfaces and correct or stabilize the

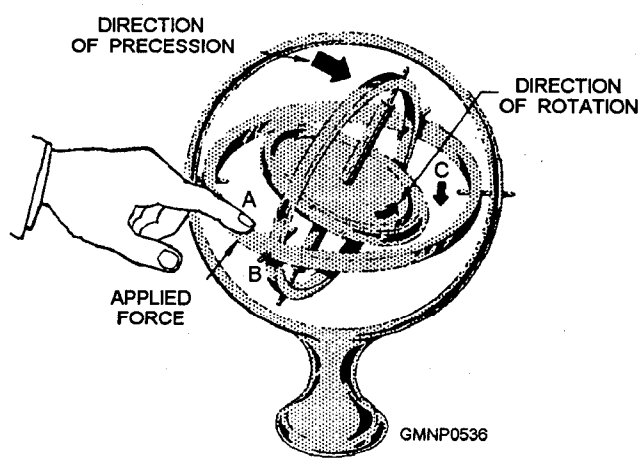

Figure 9-9.—Precessing a gyro.

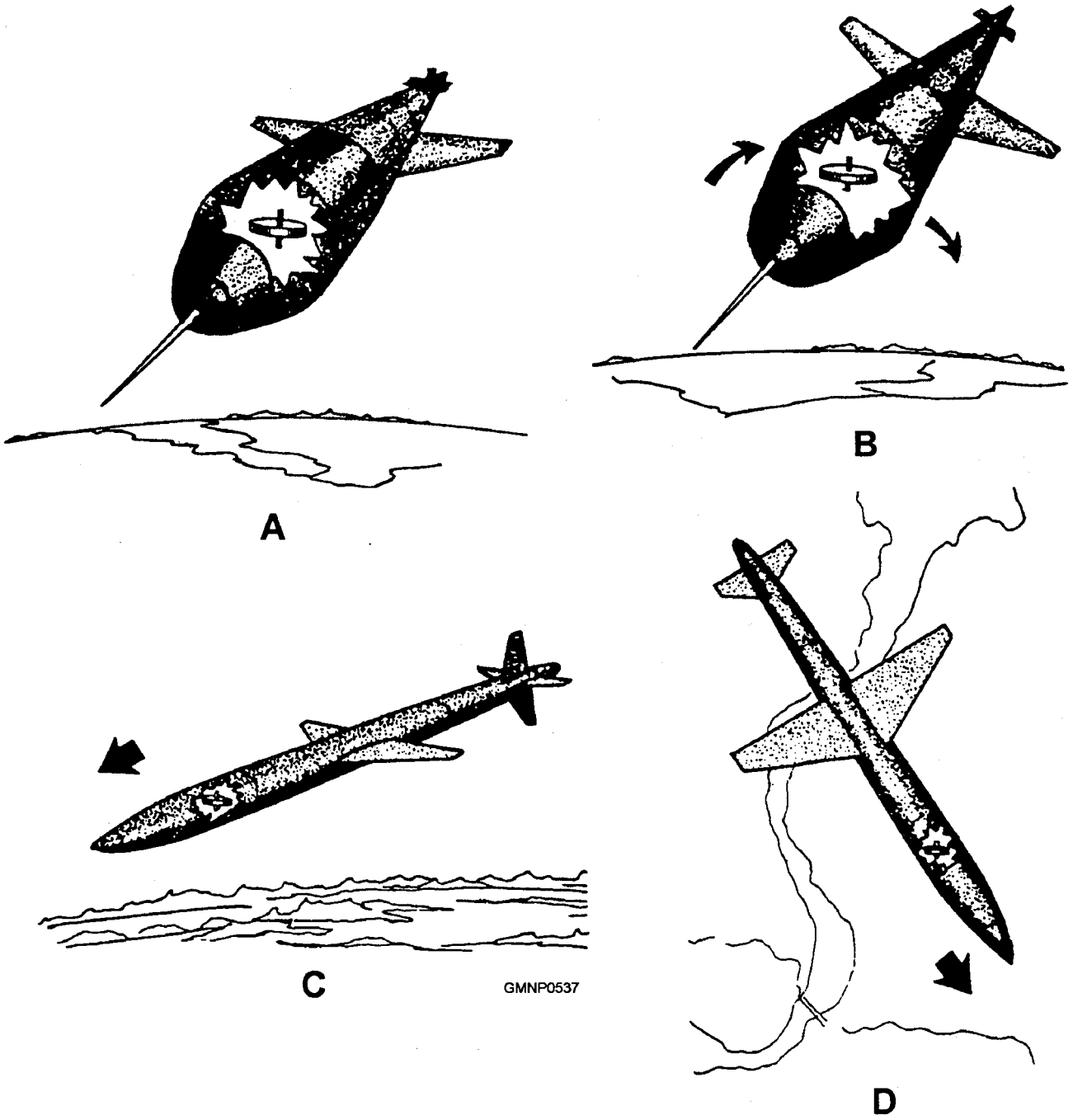

Figure 9-10.—View A.—missile horizontal; View B.—missile rolls; View C.—missile pitches; View D.—missile yaws. In all cases, gyro remains fixed in space.

missile. View C shows that a free gyro with a vertical spin axis can also be used to monitor or detect pitch.

Actually, a minimum of two free gyros is required to compensate for roll, pitch, and (the third factor) yaw. However, for yaw, a second gyro must be mounted so its spin axis is in the horizontal plane, as shown in view D. (You are looking down onto the missile.)

Rate Gyros in Guided Missiles

The free gyros just described measure and generate correction signals necessary to maintain a stable attitude. However, because of the momentum of the missile in responding to these signals, another problem develops. Large overcorrection would result unless

there were some way of determining how fast the angular movement is occurring. In other words, the missile would overshoot and oscillate around the given axis.

Rate gyros (shown in view B of fig. 9-8) take into account the momentum of the missile and continuously determine any angular accelerations. By combining the free and rate gyro signals, the tendency of the control surfaces to overcorrect is minimized and better in-flight stability is obtained. Normally, there is an independent rate gyro for each (roll, pitch, and yaw) axis.

CONTROL SURFACES

Aerodynamic control is the connecting link between the guidance system and the flight path of the missile. Effective control of the flight path requires smooth and exact operation of the control surfaces of the missile. They must have the best possible design configuration for the intended speed of the missile. The control surfaces must move with enough force to produce the necessary change of direction. The adjustments they make must maintain the balance and center of gravity of the missile. The control surfaces must also be positioned to meet variations in lift and drag at different flight speeds. All these actions contribute to the in-flight stability of the missile.

Stability and Lift

So far we have discussed the principles of producing lift by using chambered or curved airfoils. Chambered airfoils are mainly used on subsonic, conventional aircraft. The present-day supersonic guided missile must use a different kind of control surface to provide stability and lift.

In most SMS missiles, lift is achieved almost entirely by the thrust of the propulsion system of the missile. The control surfaces must, therefore, be streamlined to reduce any resulting air turbulence. The lift that a missile fin does contribute is based on a slightly different principle than that seen in figure 9-6. At subsonic speeds, a positive angle of attack on the fins of the missile will produce lift just as with the conventional airfoil. However, at supersonic speeds, the formation of expansion waves and oblique (angled) shock waves also contribute to lift.

View A of figure 9-11 shows the upper surface of a supersonic fin in detail. Because of the shape of the fin, the air is speeded up through a series of expansion waves, resulting in a low-pressure area above the fin. View B of figure 9-11 shows a full cross section of the fin. Beneath it, the force of the airstream and the formation of oblique shock waves results in a high-pressure area. These pressure differences produce lift.

Fin Designs and Arrangements

Figure 9-12 shows the basic design shapes of supersonic fins. In view A, the double wedge offers the least drag but lacks strength. The modified double wedge has relatively low drag and is stronger. The biconvex causes considerable drag but is the strongest of the three designs. The biconvex is also the most difficult and expensive to manufacture.

View B of figure 9-12 shows the side view of popular supersonic fin designs. These particular shapes are used to reduce unwanted shock wave effects.

Fins can be mounted on the structure of the missile in many different arrangements. Figure 9-13 shows some of the variations. The cruciform style is the most predominant in SMS missiles.

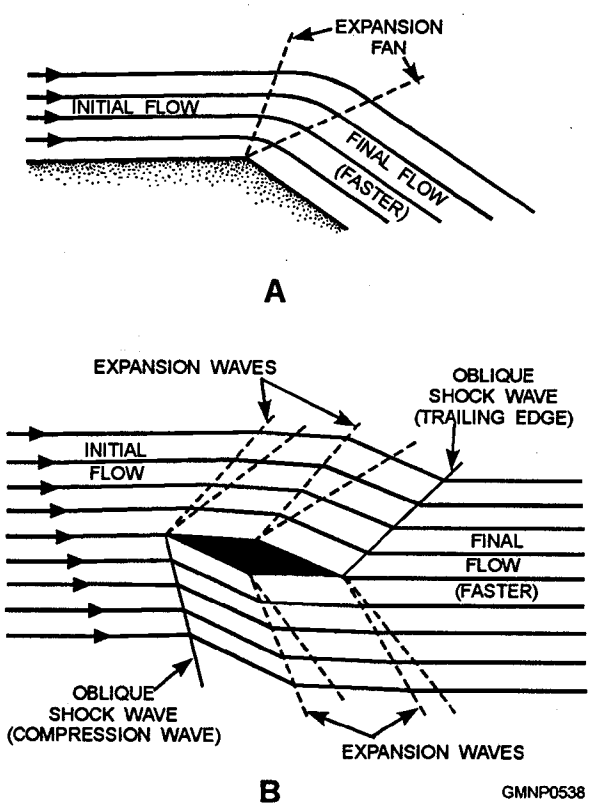

Figure 9-11.—View A.—expansion wave; View B.—airflow around a supersonic fin.

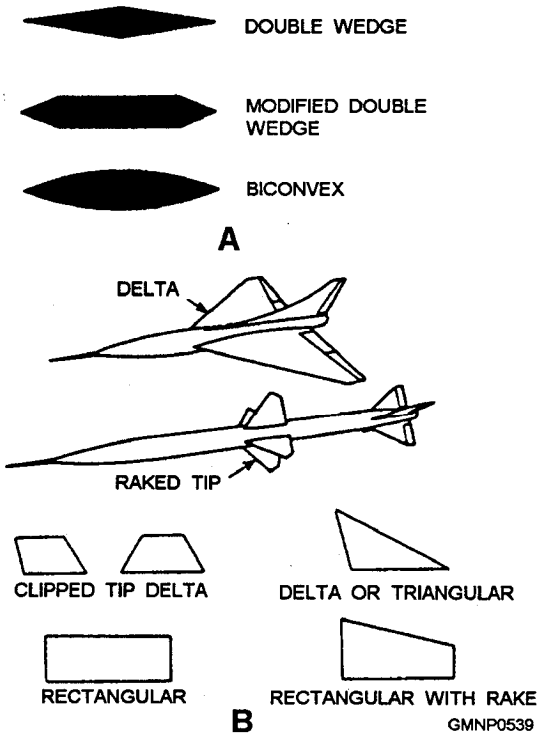

Figure 9-12.—High-speed fin configurations.

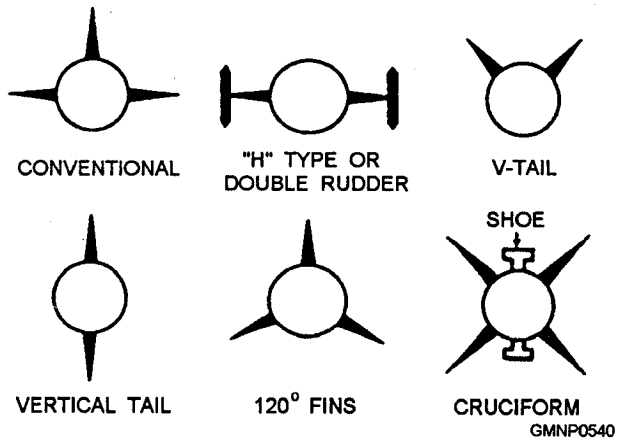

Figure 9-13.—Arrangement of control surfaces.

External Control

Guided missiles are equipped with two types of control surfaces. The stationary (dorsal) fins provide for in-flight stability and some lift. The movable control surfaces (tail control surfaces) provide the necessary steering corrections to keep the missile in proper flight attitude and trajectory.

TYPES OF CONTROL SIGNALS.— The basic control signals may come from inside the missile, from an outside source, or both. To coordinate these signals, the missile has onboard computers to mix, integrate, and rate the control signals.

The computer network takes into account guidance signals, missile movements (rotation and translation dimensions), and control surface positions. By continuously computing this information, the computer network generates error signals. These signals cause the control surfaces to move and result in steering corrections.

Does the information in the last paragraph sound familiar-kind of like a servo system? Well, it should because guided missiles use servo systems/ servomechanisms that are very similar to those we discussed with GMLS power drives.

CONTROL SYSTEM OPERATION.— A block diagram of a basic missile control system is shown in figure 9-14. Free gyroscopes provide inertial references from which missile attitude can be determined. For any particular attitude, gyro signals are sent from the gyroscope sensors to the summing network of the computer. These signals are proportional to the amount of roll, pitch, and yaw at any given instant.

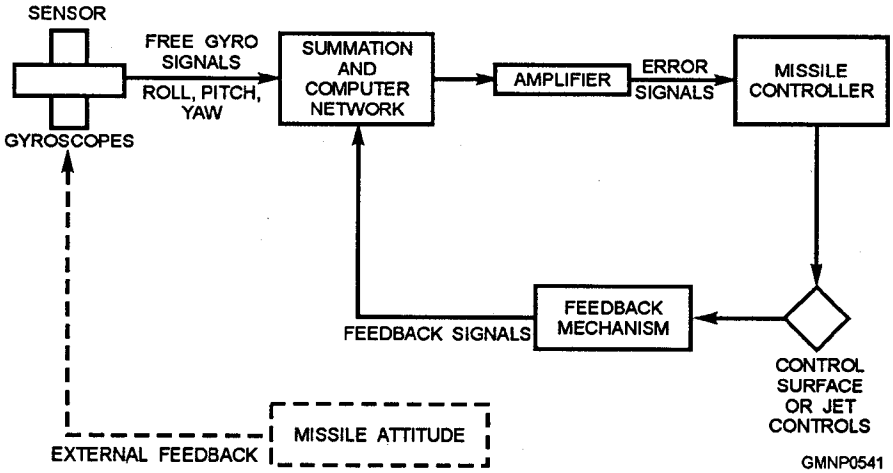

Figure 9-14.—A basic missile control system (servo).

After the gyro signals are compared with other information (e.g., guidance signals), correction signals are generated. These signals are orders to the controller servo and are used to position the control surfaces.

In addition to the internal feedback (response), an external feedback feature is present. Because the gyroscopes continuous y detect changes in missile attitude, they are always producing an output order.

GUIDANCE

LEARNING OBJECTIVE: Recall the purpose and functions of missile guidance systems to include the phases of guidance and the various types of guidance systems.

The guidance and control functions of a missile are often confused as being the same. Well, they are in one sense and are not in another. A guidance system is used to keep the missile on its proper flight path (trajectory) and headed toward the target. The guidance system can be thought of as the brain of the missile. The control system performs two distinct tasks. First, it maintains the missile in proper flight attitude. Using instruments like gyros, the control system corrects for problems experienced through rotation and translation. Second, the control system responds to orders from the guidance system and steers the missile toward the target. Think of the control system as the muscle of the missile.

Therefore, the guidance and control systems DO work together to (1) determine the flight path of the missile and (2) maintain the missile in proper flight attitude (stability). Four processes are involved with these combined operations:

1. **Tracking—** the positions of the target and missile are continuously determined.

2. **Computing—** the tracking information is used to determine the directions necessary for control.

3. **Directing—** the directions or correcting signals are applied to the controlling units.

4. **Steering—** using the correcting signals to direct the movements of the control surfaces.

The first three processes are performed by the guidance system of the missile. The fourth process, steering, is accomplished by the control system of the missile.

Figure 9-15 is a simple block diagram of a basic guidance system. This system is very similar to a basic control system shown in figure 9-14. The two systems interrelate and interact in their operations.

PHASES OF GUIDANCE

Generally, missile in-flight guidance is divided into three phases-boost, midcourse, and terminal. These names refer to the different parts or time periods of a trajectory (fig. 9-16).

Boost Phase

The boost phase of missile flight is also known as the launching phase or initial phase. It is during this period that the missile is boosted to flight speed. It lasts until the fuel supply of the booster bums up. For the medium-range (MR) missiles that use a dual-thrust rocket motor (DTRM), the booster propellant grain is consumed and bums out. For extended range (ER) missiles, the separate booster drops off at burnout.

The boost phase is very important to the flight path of the missile. The launcher and missile are aimed in a specific direction by orders from the FCS computer. This aiming establishes the line of sight (trajectory or flight path) the missile must fly along during the initial phase. At the end of boost, the missile must be at a calculated point. Some missiles are guided during boost; others are not.

Midcourse Phase

The second or midcourse phase of guidance is often the longest in both distance and time. During midcourse (or cruise) guidance, the missile makes any corrections necessary to stay on the desired course.

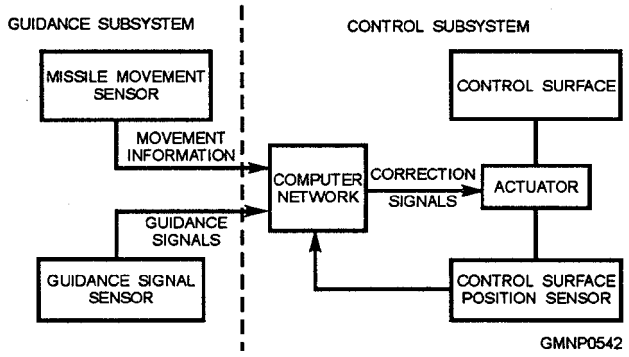

Figure **9-15.—Basic missile guidance system.**

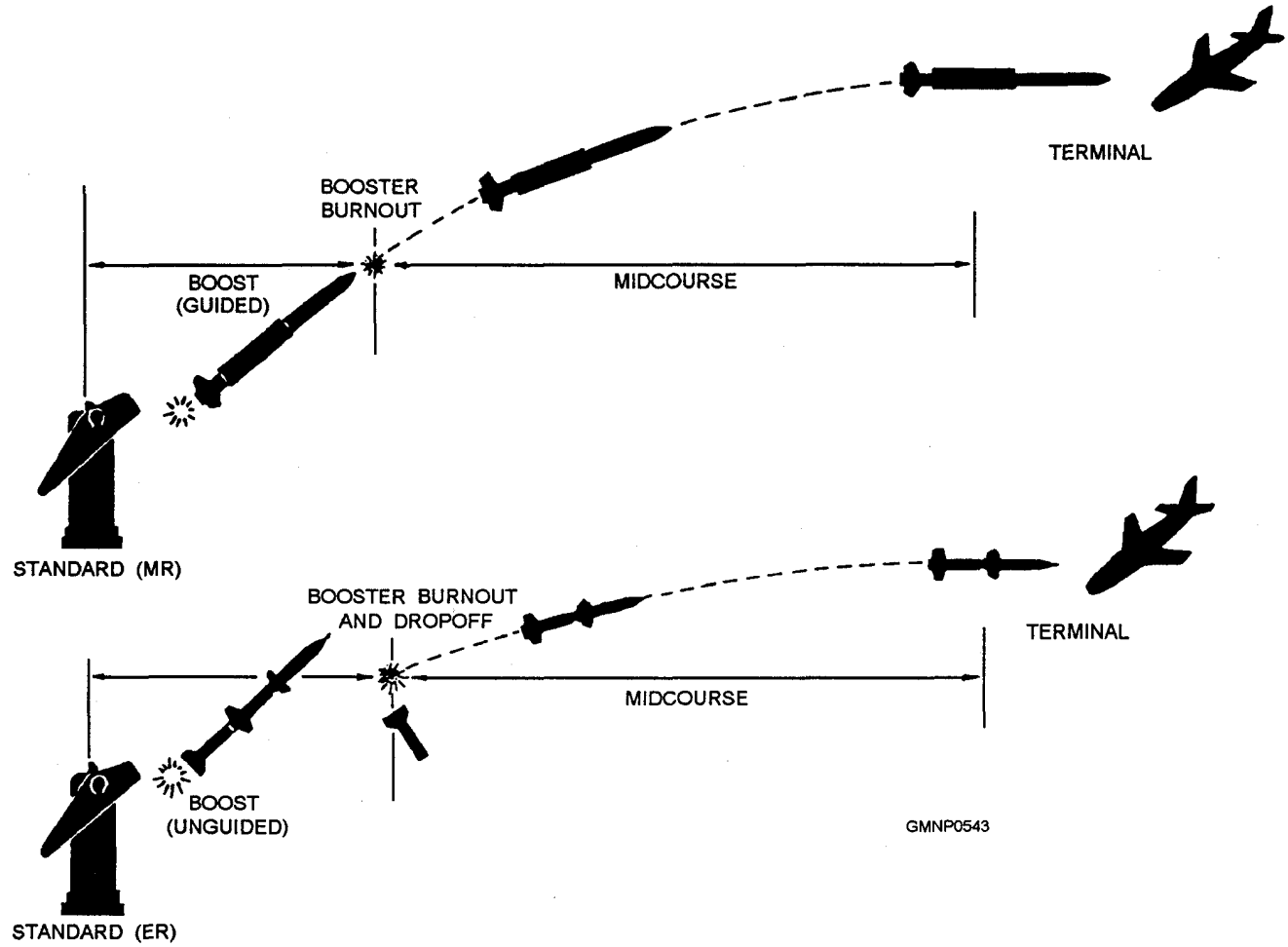

Figure 9-16.—Guidance phases of flight.

Guidance information can be supplied to the missile by various means. The object of midcourse guidance is to place the missile near the target.

Terminal Phase

The terminal phase of guidance brings the missile into contact or close proximity with the target. The last phase of guidance must have quick response **to** ensure a high degree of accuracy. Quite often the guidance system causes the missile to perform what is best described as an "up-and-over" maneuver during the terminal phase. Essentially, the missile flies higher than the target and descends on it at intercept.

We will now discuss the various types of guidance systems and how they direct the missile to the target. The four main categories are (1) command, (2) homing, (3) composite, and (4) self-contained.

COMMAND GUIDANCE SYSTEMS

Command guidance missiles are those which are guided on the basis of direct electromagnetic radiation contact with a friendly source (i.e., ship, ground, or aircraft). All guidance instructions, or commands, come from outside the missile. The guidance sensors detect this information and convert it to a usable form. The output of the guidance computer initiates the movement of the control surfaces and the missile responds.

There are (or were) various types of command guidance methods. Early examples included remote control by wire and by radio command. Generally command by (believe it or not) wire was limited to air-launched missiles. A pair of fine wires was unrolled from coils after the missile was launched. The airplane pilot mentally calculated and manually controlled the trajectory of the missile to the target. Radio command eliminated wires and extended the range of a missile.

However, one solution always leads to another problem. Radio command was effective as long as the operator could see the missile. After it flew beyond the range of normal vision . . . well, you can understand the problem if you have ever owned a remote-controlled model airplane. From wire, to radio, to the next logical method—radar.

In the radar command guidance method, radar is used to track the missile and the target. Guidance signals are sent to the missile by varying the characteristics of the missile radar tracking beam. Sometimes a separate radio transmitter is used.

Figure 9-17 shows the basic arrangement of radar command guidance. As soon as radar #1 (target tracker) is locked on target, tracking information is fed to the computer. The missile is launched and tracked by radar #2 (missile tracker). Data from both target and missile radars, such as ranges, elevations, and bearings, are fed continuously into the computer. The computer analyzes the data and determines the correct flight path for the missile. The guidance signals or commands generated by the computer are routed to a command (radar or radio) transmitter and sent to the missile. The receiver of the missile accepts the instructions, converts them, and directs the control surfaces to make steering corrections.

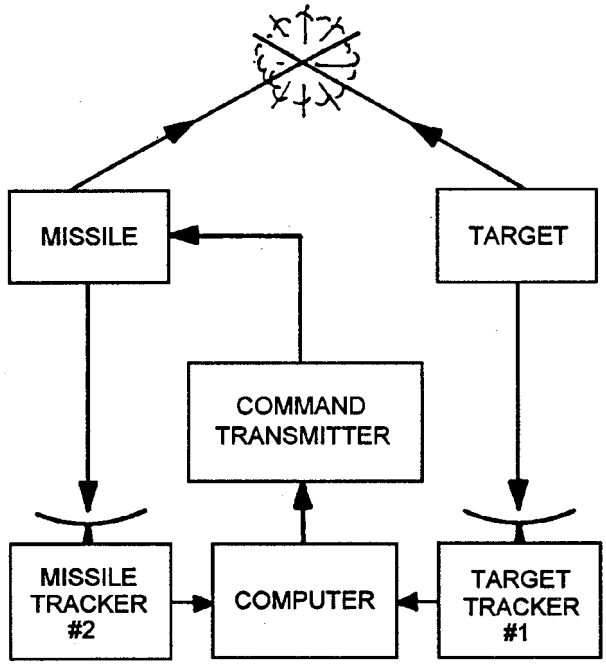

Figure 9-17.—Basic radar command guidance.

HOMING GUIDANCE SYSTEMS

Homing guidance systems also rely on electromagnetic radiations for guidance information. The homing device is usually a small antenna located within the nose of the missile. It detects some type of distinguishing feature or radiation given off by or reflected from the target. This information is converted into usable data and positions the control surfaces. Three types of homing guidance systems are used by SMS missiles—active, semiactive, and passive.

Active Homing Guidance

In active homing guidance (view A of fig. 9-18), the missile contains an onboard transmitter and receiver. The transmitter sends out radar signals in the general direction of the target. These signals strike the target and reflect or bounce back to the missile. These return "echoes" are picked up by the receiver antenna of the missile and fed to the guidance computer. The computer output generates steering corrections for the control system. Active homing guidance does not require a ships radar; the missile is entirely on its own after launch.

Semiactive Homing Guidance

In semiactive homing guidance (view B of fig. 9-18), the missile contains only a receiver (referred to as a seeker head or signal antenna). The ships fire control radar serves as the transmitting source and directs its radar energy to illuminate the target. As in active homing guidance, part of this energy is reflected or bounced from the target. The receiver of the missile picks up the reflected energy and uses it to generate its own steering commands.

Passive Homing Guidance

The passive homing guidance method (view C of fig. 9-18) depends on the missile's detecting some form of energy emitted by the target. A receiver antenna inside the missile picks up this "signal" and computes all necessary guidance information. Steering corrections are made and the missile homes in on the target.

Passive homing guidance, like active homing, is completely independent of the launching ship. Passive homing normally is not used to guide the missile all the way (from launch to intercept). However, it is well adapted to serve as a secondary or backup guidance system. Should the enemy sense any radar illumination

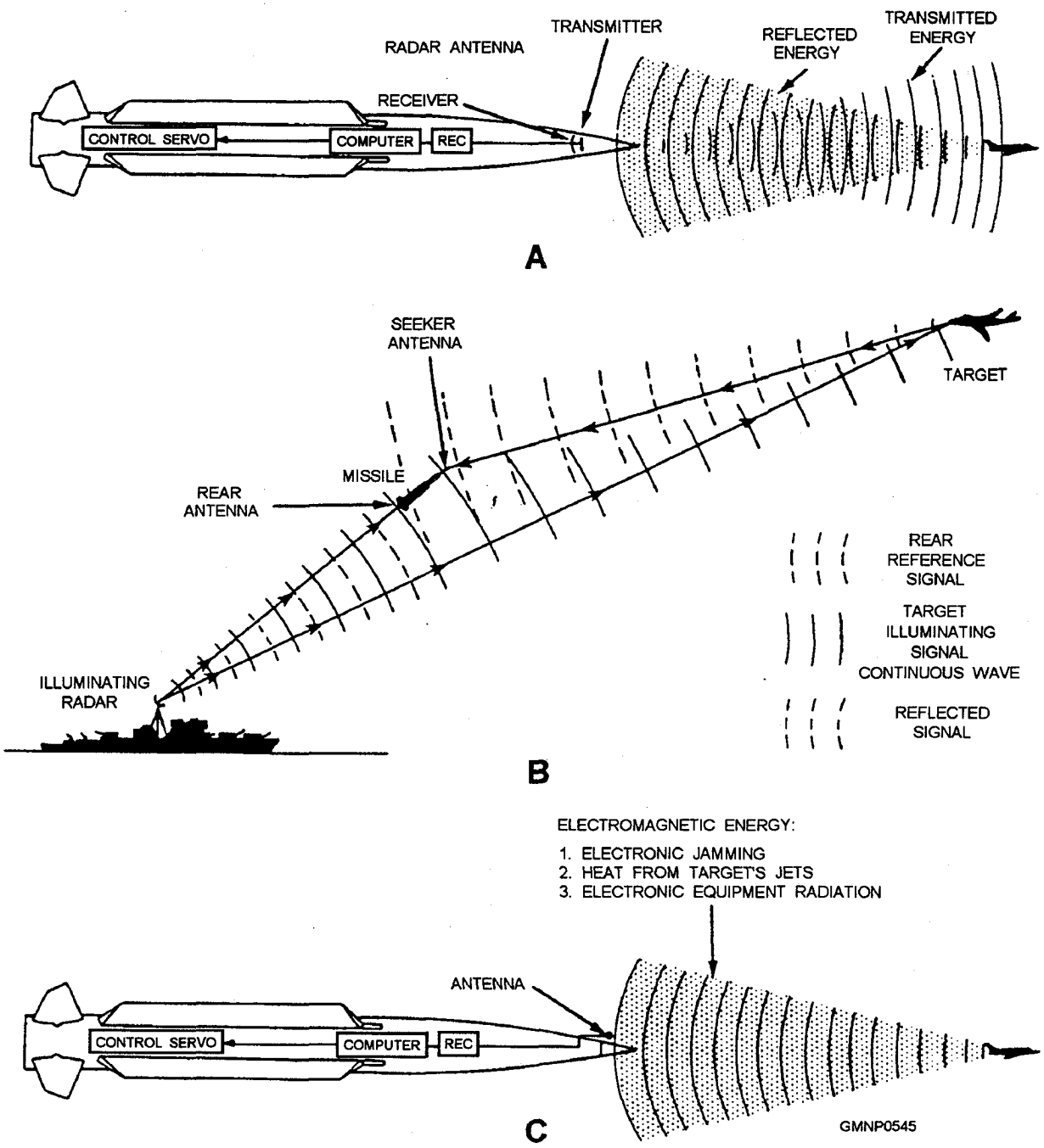

Figure 9-18.—Homing guidance system: A. Active; B. Semiactive; and C. Passive.

(such as from active and semiactive homing methods), electronic jamming could be initiated. This jamming "mixes" up the guidance information to the missile. Sensing the jamming, circuits within the guidance system of the missile switch over to passive mode. The missile continues toward the target, homing on the jamming source. Other sources of energy used for passive homing can include light, sound, heat from a propulsion unit, and so forth.

COMPOSITE GUIDANCE SYSTEMS

There isn't any one type of guidance system (command or homing) best suited for all phases of guidance. Therefore, it is logical to design one guidance system that combines the advantages of the others. For example, a missile may ride a signal until it is within a certain range of the target. At this point, the signal is terminated and a type of homing guidance takes over until intercept.

Control of a particular guidance subsystem may come from more than one source. A signal is setup to designate when one phase of guidance is over and the next phase begins. This signal may come from a tape, an electronic timing device, or from a radio or radar command.

The device that switches guidance subsystems is often called a control matrix. It automatically transfers the correct signal to the guidance subsystem regardless of conditions. If the midcourse subsystem should fail, the matrix switches in an auxiliary subsystem. Should the original guidance subsystem become active again, the matrix switches back to the primary subsystem.

SELF-CONTAINED GUIDANCE SYSTEMS

Certain guided missiles have self-contained guidance systems. All guidance and control functions are performed totally within the missile. They neither transmit nor receive any signals during flight. Therefore, jamming or other electronic countermeasures are ineffective against them. Generally, self-contained guidance systems are used in surface-to-surface or shore applications.

Preset Guidance

The term *preset* completely describes this method of guidance. Before the missile is launched, all the information relative to target location and the required missile trajectory must be calculated. The data is then locked into the guidance system so the missile will fly at correct altitude and speed. Also programmed into the system are the data required for the missile to start its terminal phase of flight and dive on the target.

One disadvantage of preset guidance is that once the missile is launched, its trajectory cannot be changed. Therefore, preset guidance is really only used against large stationary targets, such as cities.

Navigational Guidance Systems

When targets are at very great distances from the launch site (beyond the effective range of radar, for example), some form of navigational guidance must be used. Accuracy at these distances requires exacting calculations and many complicated factors must be considered. Three types of navigational guidance systems that may be used by long-range missiles are inertial, celestial, and terrestrial.

INERTIAL GUIDANCE.— The inertial guidance method is similar to the preset guidance method. Inertial guided missiles also receive preprogrammed information before launch. After launch, there is no electromagnetic contact between the missile and its launch point (the ship, in our case). However, unlike preset guidance, the missile can make corrections to its flight path and does so with amazing accuracy.

Flight control is accomplished by using special sensors, called accelerometers, mounted on a gyro-stabilized platform. All in-flight accelerations are measured continuously and the guidance and control systems generate steering orders to maintain the proper trajectory. The unpredictable outside forces (e.g., wind) are also monitored by the sensors. Correction orders are generated to maintain proper flight attitude.

The use of an inertial guidance system takes much of the guesswork out of the long-range fire control problem. It has proven to be extremely reliable and, above all, very accurate.

CELESTIAL GUIDANCE.— A celestial guidance system uses stars or other celestial bodies as known references (or fixes) in determining a flight path. This guidance method is rather complex and cumbersome. However, celestial guidance is quite accurate for the longer ranged missiles.

TERRESTRIAL GUIDANCE.— Terrestrial guidance is also a complicated arrangement. Instead of celestial bodies as reference points, this guidance system uses map or picture images of the terrain which it flies over as a reference. Terrestrial and celestial guidance systems are obviously better suited for large, long-range land targets.

PROPULSION

LEARNING OBJECTIVE: Recall the types of missile propulsion, engines, and fuels, the affects of acceleration, and the four associated speed regions.

"Propulsion" is defined as the act of driving forward or onward by means of a force that imparts motion. Considering all the different types of weapons, there are three methods of propulsion:

1. Gun or impulse
2. Reaction
3. Gravity

Any weapon that uses an internal source of propulsive power to carry it to a target is said to be a reaction-propelled weapon. Guided missiles are reaction-propelled weapons. The propelled power is obtained from the combustion of a fuel in a reaction motor.

REACTION PROPULSION

The basic principle of reaction propulsion can be summarized by the old law of physics that states, "for every action, there is an equal and opposite reaction." A person walks forward by pushing backward against the ground. A missile moves forward when a mass of gas (a jet) is expelled rearward at high speed.

Jet propulsion is another term that describes reaction propulsion. Jet propulsion is a means of locomotion obtained from the momentum of matter ejected from within a body. This matter must be in the form of a fluid jet. The fluid can be water, steam, heated air, or gaseous products produced from burning a fuel. For our purposes, jet propulsion systems used in guided missiles may be divided into two types—thermal jet engines and rocket engines. Both types operate by expelling a stream of high-speed gas from an exhaust nozzle.

Thermal Jet Engines

Missiles with thermal jet engines "breathe" in a predetermined amount of air and compress it. Liquid fuel is then injected into the compressed air and the mixture is ignited. Combustion takes place within a combustion chamber. The resulting hot gases are expelled through an exhaust nozzle at the rear of the missile. At this point, heat energy is transformed into kinetic energy and the thrust or propulsive motion is created.

An air-breathing jet engine must rely on oxygen obtained from the atmosphere for fuel combustion to take place. That is a disadvantage because the flight altitude (or ceiling) of the missile is thereby limited. However, at lower altitudes, the air-breathing (thermal) jet engine is very efficient.

Rocket Engines

A rocket (jet) engine does not depend on air intake for its operation. Hence it is capable of functioning at very high altitudes and even beyond the atmosphere. A rocket engine carries within it all the materials required for combustion. That usually includes a fuel, either solid or liquid, and an oxidizer. The oxidizer is a substance capable of releasing the oxygen that is necessary to support combustion.

Once the propellant of the rocket engine is ignited, hot gases are expelled from the exhaust nozzle. Heat energy is changed to kinetic energy and thrust is created. The amount of thrust developed by a rocket-type engine generally is rated as extremely high compared to the thrust of a similar sized air-breathing engine.

The more important characteristics of all rocket motors are summarized below.

1. The thrust developed by a rocket motor is very high, nearly constant, and is independent' of missile speed.
2. Rockets will operate in a vacuum.
3. Rockets have relatively few moving parts and simple design.
4. Rockets have a very high rate of propellant consumption.
5. Essentially the burning time of a rocket propellant is short.
6. Rockets need no booster since they develop full thrust at takeoff. If a booster is used, it aids the missile in reaching flight speed in minimum time and can extend range.

We'll now discuss two types of reaction/jet propulsion units used in SMS missiles. First, we'll examine a thermal jet-type engine known as a turbojet. Then we'll cover solid-fuel rocket motors which are classified as rocket engines.

TURBOJET ENGINES

A turbojet engine is an air-breathing, thermal jet propulsion system. It is called a turbojet because a portion of its exhaust is used to operate a turbine. The turbine, in turn, drives an air compressor. The primary function of a compressor is to receive and compress large masses of air. It then distributes this air to the combustion chambers.

Therefore, the major areas of a turbojet engine are an air intake system, an air compressor, a combustion chamber, and a turbine. These components essentially form an open-cycle gas turbine combined with a jet stream. In operation, the compressor is driven by the gas turbine, as shown in figure 9-19. It supplies air under high pressure to the combustion chamber. The turbine absorbs only part of this energy while the rest is used for thrust. Once the engine is started, combustion is continuous.

The turbojet does have one minor disadvantage. Its speed is limited to less than the speed of sound. If it approaches that point, shock waves develop on the compressor blades and interfere with engine operation/efficiency.

SOLID-FUEL ROCKET MOTORS

Although there are solid- and liquid-fuel rockets, the majority of SMS missiles have solid-fuel rocket motors. The major elements of such propulsion units include (1) propellant, (2) combustion chamber, (3) igniter or squib, and (4) exhaust nozzle (fig. 9-20).

The combustion chamber of a solid-fuel rocket has two purposes. First, it acts as a stowage place for the propellant. Second, it serves as the area where burning takes place. Depending on the grain configuration used, this chamber may also contain a device to hold the propellant in a certain position. A trap of some sort may be included to prevent flying particles of propellant from clogging the throat of the exhaust nozzle. Additionally, the chamber may have resonance rods. They absorb vibrations set up in the chamber during burning.

The igniter consists of a small explosive charge, such as black powder or a comparable material. The substance is easily ignited by either a spark discharge

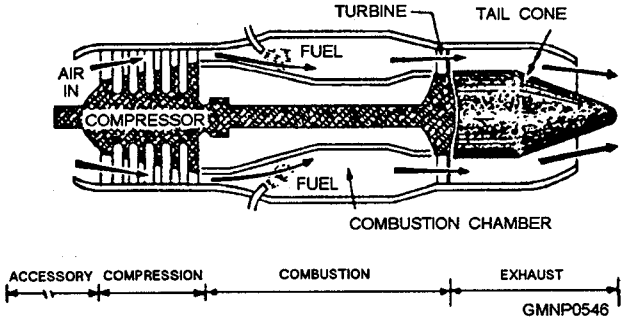

Figure 9-19.—Cross-sectional view of a basic turbojet.

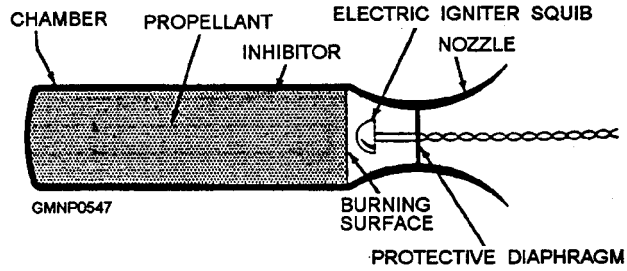

Figure 9-20.—Components of a solid-fuel rocket motor, with end burning grain.

or small electric current. As it bums, the igniter produces a temperature high enough to activate the main propellant charge. The igniter is sometimes known as a primer or a squib.

The exhaust nozzle serves the same purpose as in any other jet-propulsion system. It must be of heavy construction and heat-resistant due to the high pressures and temperatures of the exhaust gases.

Operation of a solid-fuel rocket is simple. To start the combustion process, the igniter or electric squib is "fired to initiate the main propellant. You get a cloud of smoke, a pretty loud roar, and a rail-clear indication!

Types of Solid Propellants

There are two basic types of solid-propellant charges—restricted burning and unrestricted burning. A restricted-burning charge has some of its exposed surfaces covered with a liner or inhibitor (view A in fig. 9-21). This covering confines the burning area and aids

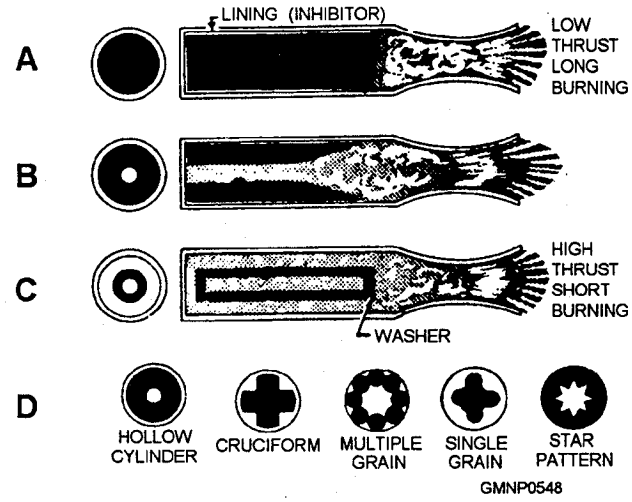

Figure 9-21.—Solid propellant grains: A. Restricted burning; B. Restricted bored; C. Unrestricted burning; D. Grain patterns.

in controlling the burning rate of the propellant. The use of an inhibitor lengthens burning time and helps to control combustion-chamber pressure.

A restricted-burning charge is usually in the shape of a solid cylinder. It completely falls the combustion chamber and burns only on its end. The thrust developed is proportional to the cross-sectional area of the charge. Burning time is proportional to the charge length. The restricted-burning charge provides a low thrust and long burning time. Normally, it is used in the sustainer section of the propulsion system of the missile.

Unrestricted-burning charges are designed so they bum on all surfaces at once. The charge is usually hollow and bums on both the inside and outside surfaces. (See view C of fig. 9-21.) Since the inside area increases while the outside area decreases during combustion, a constant burning area is maintained.

For an unrestricted-burning charge, thrust is also proportional to the burning area. The burning time of hollow grains depends on their web thickness. That is the distance between the inside and outside surfaces. An unrestricted-burning charge delivers a lot of thrust for a short period of time. It normally is used in the booster section of the propulsion system of the missile.

Certain SMS missiles use a separate missile-booster combination. The solid-fuel booster, using an unrestricted-burning charge, provides the initial large thrust for a short period of time. In doing so, it gets the missile off the launcher rail, up to flight speed quickly, and extends the range of the weapon. The solid-fuel sustainer of the propulsion system of the missile uses a restricted-burning charge. It is ignited at booster separation and provides the low thrust, long burning time to "sustain" or keep the missile going down range.

Other types of SMS missiles use what is called a dual-thrust rocket motor (DTRM) (fig. 9-22). The solid-fuel propulsive charge is formed by bonding two types of propellants into a single unit. The center (booster) grain is an unrestricted charge and boosts the missile into flight. The outer (sustainer) grain is a restricted charge and sustains the missile until the end of flight.

Burning Rate of Solid Propellant Grains

The key point to understand about the restricted and unrestricted charges is that their burning rate is controlled. An uncontrolled burning rate would result in an explosion. That is fine for the warhead which we'll discuss next, but for a rocket motor. . . it could really ruin a paint job on the launcher.

The ideal solid-propellant would be ignited easily and continue to bum evenly. However, "ideal" is not possible. One way to control a burning rate is to use an inhibitor. An inhibitor is any substance that interferes with or retards combustion. The lining and washer shown in views A and C, respectively, of figure 9-21 are two examples of inhibitors.

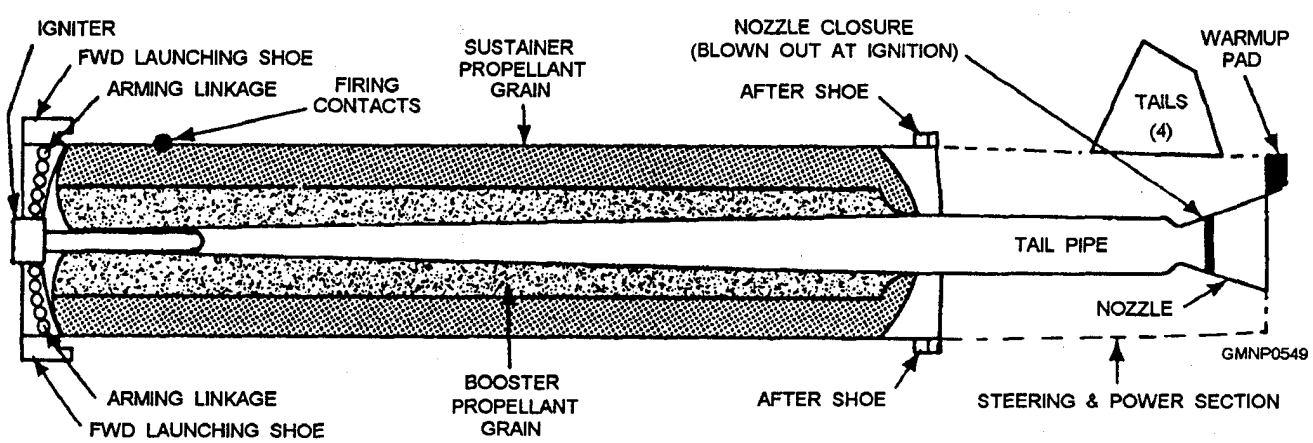

Figure 9-22.—Cutaway view of a dual-thrust rocket motor.

another method of controlling the burning rate of a propellant is to use various grain shapes. Common examples of these shapes are shown in view D of figure 9-21. Resonance rods, mentioned earlier, may be used to offset the resonant burning or "chugging" of a propellant. These metal or plastic rods are sometimes included in the combustion chamber. They serve to breakup regular fluctuations in the burning rate and accompanying pressure variations. They do so by maintaining a constant burning area while the surface of the grain is being consumed.

The burning characteristics of a solid propellant depend on various factors. Examples include its chemical composition, initial temperature, size and shape of the grains, and so forth. In most missiles, the propellant is case-bonded to the combustion chamber walls. This bonding means the propellant composition is melted and then poured or cast directly into the chamber. This technique makes full use of the entire chamber area.

One limitation to solid-fuel propellants is their sensitivity to temperature changes. The burning rate of the propellant can be affected. A particular grain may produce more thrust on a hot day than it will on a cold day. Now, this doesn't mean you can't fire missiles on your next North Atlantic cruise (for you East Coast Sailors). However, it is a factor to be considered in the fire control problem.

Temperature also affects the physical state of a solid-fuel propellant. At extremely low temperatures, some grains become brittle and tend to crack. Cracks increase the burning area surface leading to an increased burning rate and combustion-chamber pressure. If the pressure exceeds the design strength of the chamber, the missile could explode. Cracks in the propellant grain resulting from the missile being dropped or jarred during handling will have the same effect-explosion.

High temperatures can make certain grains lose their shape and become soft and weak, possibly resulting in unsatisfactory performance. The optimum temperature ranges for most solid propellants in stowage is between 70°F and 100°F.

ACCELERATION

Since we are in the area of propulsion, it is appropriate to talk about acceleration as it affects a missile. Acceleration is a change in either speed or direction of motion. A missile experiences the forces of acceleration as it increases or decreases speed during flight, Changes in direction, dives, pullouts, and so forth, are also acceleration forces acting on a missile.

These forces are measured in terms of the standard unit of gravity. This unit is abbreviated by the letter g. A free-falling body is attracted to Earth by a force equal to its weight. As a result, it accelerates at a constant rate of about 32 feet per second. That is equal to one g. Missiles, making rapid turns or responding to major changes in propulsive thrust, experience accelerations many times that of gravity. The maximum g-force a missile can withstand determines the maximum turning rate of the weapon.

MACH NUMBERS AND SPEED REGIONS

Missile speeds are expressed in terms of Mach number, rather than miles per hour or knots. A Mach number is the ratio of missile speed to the local speed of sound. If a missile is flying at one half of the local speed of sound, it is traveling at .5 Mach; twice the local speed of sound is Mach 2.

Notice that we have referred to the "local" speed of sound. That is because this quantity is not fixed or constant. The speed of sound in air varies with the temperature of the air. At sea level, with ambient temperature about 60°F, the speed of sound is around 760 miles per hour. If you measure it at the top of the troposphere (about 10 miles up), the speed is only around 660 mph. At higher elevations, it then increases (800 mph+).

Regarding guided missiles, we are concerned with four speed regions.

1. **Subsonic—** the region in which airflow over all missile surfaces is less than the local speed of sound. The subsonic region starts at Mach 0 and extends to about .75 Mach.

2. **Transonic—** the region in which airflow over the missile surfaces is mixed; subsonic in some areas, higher in others. The limits of this region are not sharply defined but range between .75 Mach and Mach 1.2.

3. **Supersonic—** the region in which airflow overall missile surfaces is at speeds greater than the local speed of sound. This region extends from about Mach 1.2 upward.

4. **Hypersonic—** speeds on the order of Mach 10 and higher.

Most SMS guided missiles are designed for use against supersonic air targets (antiair warfare). These missiles normally travel in the Mach 2 to 2.5 range. Other SMS guided missiles, especially those designed only for use against surface targets (like Harpoon), travel in the subsonic region.

WARHEADS

LEARNING OBJECTIVE: Recall the types, purpose, and effectiveness of missile warheads, the types of fuzes, and the purpose of the safe and arming device.

Guided missile warheads are the business end of the missile. The basic warhead section consists of three functional elements—payload, faze, and safety and arming (S&A) device. Variations in warhead design can be obtained by altering any one of the three elements since they are usually separate units. In other types of ammunition, like a gun projectile, the fuze and S&A device are combined into one single unit. The faze function and S&A function are still performed separately but the device is known just as a faze.

NOTE

In this text, we will refer to an S&A device as a safe and arming device. In other publications, you may see S&A (or S-A) defined as safety and arm, safeing and arming, and so forth. Functionally, all S&A devices are the same, only the name has changed. Don't be confused.

PAYLOADS

The primary element of the warhead is the payload. It is the destructive portion and accomplishes the end result of the missile. The text will examine the following types of payloads: blast and fragmentation.

Blast-Effect Warheads

A blast-effect warhead consists of a quantity of high explosives in a metal case. The force of the explosion creates a pressure or shock wave in the air or surrounding medium. It is this pressure wave that causes damage to the target.

Blast-effect warheads are most effective against underwater targets. Because water is incompressible and relatively dense, the effect of the blast is essentially magnified. A blast-effect warhead is also fairly successful against a ground or surface target. A blast-effect warhead is least effective against an air target. Air is not that dense and the shock wave dissipates quickly as it expands outward.

In all applications, timing is a predominant factor for blast-effect warheads. Figure 9-23 illustrates this point.

Fragmentation Warheads

Fragmentation warheads use the force of a high-explosive charge to break up the container or casing of the warhead. These "fragments" are then hurled outward as many high-speed pieces to cause damage to a target. The design and construction of a warhead can control the size, the velocity, and the pattern of fragment dispersion.

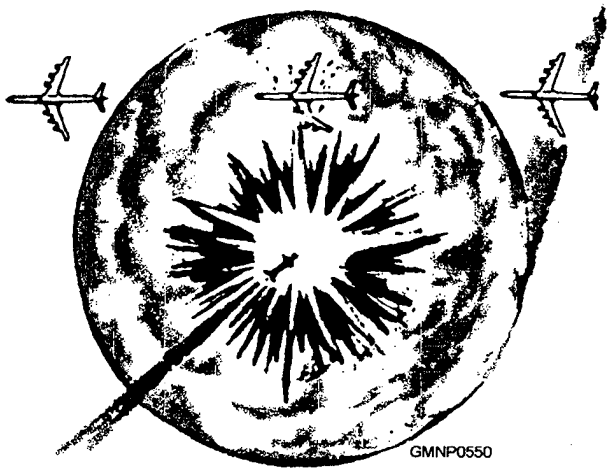

Figure 9-23.—A blast-effect warhead.

Fragmentation warheads are most effective against air targets. They can have a greater miss distance than a blast-effect warhead and do not have to make actual contact with the target. There are many design variations of fragmentation warheads. In SMS guided missiles, a popular fragmentation-style warhead is known as the continuous rod warhead. (See fig. 9-24.)

Early experiments with short, straight, unconnected rod warheads (view A of fig. 9-24) had shown that they could inflict serious damage to an air target. They could chop off propeller blades, penetrate engine blocks, slice up wings, and so forth. However, as airplanes got bigger, their structures were designed so they could receive a number of small "hits" and keep on flying, But, a long continuous cut in their structure was "bad news," and that's what a "continuous" rod warhead will do.

The continuous rod warhead is packaged in two bundles inside the missile. At detonation, a high-explosive force (inside the bundles) causes them to expand outward. (See view B of fig. 9-24.) The rods expand radially into a ring pattern which lengthens and increases in diameter. Generally, two semicircles are formed as the rods expand. (See view C of fig. 9-24.) These semicircles prevent disintegration of the pattern when maximum expansion is reached.

The expansion action can be likened to unfolding a carpenter's rule. The effect of these metal rods is a cutting action. If you've ever run into a clothesline while riding your bicycle, you can clearly understand this principle !

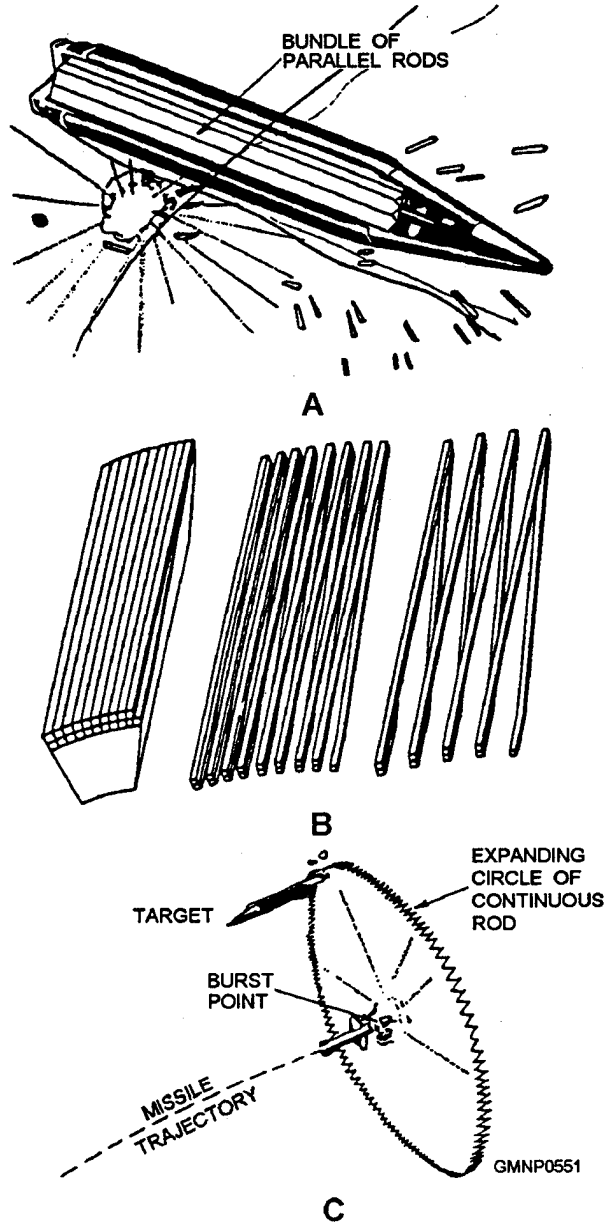

Figure 9-24.—View A.—an unconnected rod warhead; View B.—a continuous rod warhead bundle and its expanding action; View C.—the continuous rod warhead's circular pattern and cutting action.

FUZES

The fuze is the second element of a warhead of a missile. The primary purpose of the fuze is to initiate detonation of the payload. To be effective, detonation or "fuzing" must occur at a point where maximum damage will be inflicted on the target. This point is often called the "optimum time of detonation." It is the job of the fuze to determine this time or point, which is based on the nature of the target and the attack geometry involved.

A large variety of fuze types is available. Three general classes are contact (impact), proximity, and ambient. The fuze type for a given application depends on the characteristics of the target, the missile, and the warhead. In guided missiles, the fuze is generally referred to as a target detection device (TDD). Some guidance systems produce or gather much or all the information required to make the fuze function. In other cases, the TDD itself provides this information.

Contact Fuzes

Contact or impact fuzes are actuated by the inertial force that occurs when the missile strikes the target. Figure 9-25 illustrates the action of a contact fuze before and after impact. (The booster charge and main charge are not part of the fuze.)

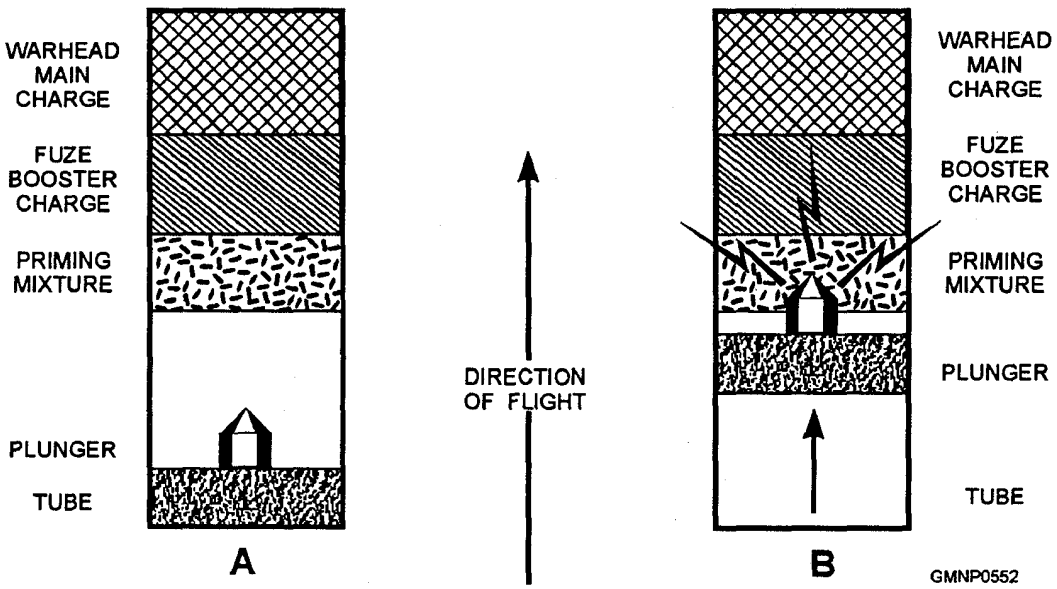

Figure 9-25.—Contact fuze action: A. Before impact; B. After impact.

During the launch and flight of the missile, the plunger remains in the after end of the fuze. When the missile strikes the target, it decelerates rapidly. The inertia of the plunger carries it forward to strike the sensitive priming mixture. The primer detonates and starts a chain reaction by igniting the fuze booster charge which ignites the main charge.

Sometimes a time delay element is used with a contact fuze. This delay permits the warhead to penetrate the target before detonation. Quite often a contact fuze is also used in conjunction with another type of fuze. For example, the main fuze can be a proximity-type fuze. Should it fail to operate as the missile approaches the target, the contact fuze would still function on impact. In this sense, a contact fuze serves as a backup or secondary fuze,

Proximity Fuzes

Proximity fuzes are actuated by some characteristic feature, influence, or property of the target or target area. Several types of proximity fuzes are available. The influence may be photoelectric, acoustic, pressure, electromagnetic (radio and radar), or electrostatic. Each of these influences could be preset to function when the intensity of the target characteristic reaches a certain magnitude.

Proximity fuzes are designed to initiate warhead detonation as the missile approaches or nears the target. The resulting burst pattern occurs at the most effective time and location relative to the target. Designing a fuze to produce an optimum burst pattern is not that easy. The most desirable pattern depends largely on the relative speed of the missile and of the target. Sometimes the fire control computer (during preflight programming) can adjust the sensitivity of the fuze. This action can compensate for varying target speeds and sizes. (We'd want a more sensitive fuze for a small target compared to a less sensitive fuze for a larger target.) Proximity fuzes, therefore, activate the warhead detonating system after computing two factors: (1) the distance to the target and (2) the rate at which missile-target range is closing.

Since a proximity fuze operates on the basis of information received from the target, it is subject to jamming. If jammed, the fuze could become inoperative. The missile would only damage the target if a direct hit (contact fuze) were scored. More seriously, jamming the fuze could result in premature detonation. In that case, the missile has no chance to reach the target. Most proximity fuzes use some means of electronic countermeasure or counter-counter-measure to eliminate or bypass the effects of jamming.

Of all the types of influence available (i.e., photoelectric, acoustic, pressure, etc.), the electromagnetic methods (radio and radar) are most practical. The TDD (fuze) transmits high-frequency

energy waves toward the target (fig. 9-26). Some of the waves are reflected from the target. Because the missile is constantly closing on the target, the reflected signal is of a higher frequency than the transmitted signal. The two signals, when mixed, will generate what is called a Doppler frequency. Its amplitude is a function of target distance. When the amplitude reaches a predetermined level, the faze is programmed to operate and warhead detonation is initiated.

Ambient Fuzes

An ambient fuze is one that is activated by some characteristic of the environment surrounding the target. Ambient fazes are used mainly for surface or subsurface applications. A simple example involves a hydrostatic fuze for underwater detonation. In this case, the fuze is basically a depth meter and activates when water pressure reaches a certain amount.

Command Fuzes

A command faze responds to some form of signal from a remote control point. In guided missiles, this type of fuze is often used to order the weapon to self-destruct. The remote control point would be the firing ship. If the trajectory of the missile goes "wild" and/or the flight path endangers friendly forces, the firing ship orders command-destruct.

Other types of self-destroying fuzes are designed to actuate under certain conditions. For example, the missile can "lose sight" of the target. That may occur if some internal component malfunctions or the fire control radar ceases to transmit. Regardless of cause, the missile cannot respond to guidance data. If the problem cannot be corrected rather quickly, circuits within the missile activate its self-destruct faze.

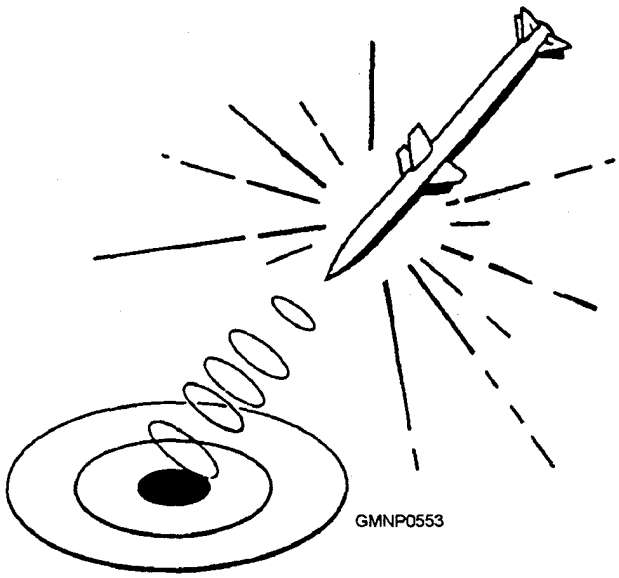

Figure 9-26.—A proximity fuze.

SAFE AND ARMING DEVICE

The safe and arming (S&A) device is the third element of a warhead. Throughout a guided missile, there are many S&A-type devices. The one we are discussing here is related to the warhead and operates in conjunction with the fuze or TDD.

Faze action may be divided into two phases—functioning and S&A. The functioning process involves initiating payload detonation at the optimum time, thus inflicting maximum damage. The S&A device has a dual purpose. As a safety feature, it must prevent premature initiation of the payload. The safety is effective until a specific signal or series of signals is received. At this time, certain events have occurred in correct sequence or (maybe) a desired time interval has elapsed. In any case, it is now safe to arm the warhead.

For the arming feature, the arming mechanism of the S&A device must actuate. This acuation removes or cancels the safety feature and permits the transfer of energy between the fuze and payload.

Normally, the safety function is accomplished by inserting a physical barrier between the faze and payload. The S&A device thus acts as an open switch until safe detonation can be performed. Armed, the switch is closed and the explosive train is capable of activating.

Study figure 9-27 for a moment. It depicts atypical explosive train for a warhead and illustrates the relationship between the faze (TDD), S&A device, and payload.

SMS GUIDED MISSILES

LEARNING OBJECTIVE: Recall the types, capabilities, and uses of SMS guided missiles.

We will show and provide a brief description of the various guided missiles launched from SMS GMLSs on naval ships in the fleet. Some of these weapons are capable of being launched from aircraft and submarines too. For the most part, SMS guided missiles are designed to be used against air targets. However, several missiles in our SMS arsenal can engage surface, underwater, and land targets.

The Standard missile (fig. 9-28) represents the largest group of guided missiles in the SMS arsenal used

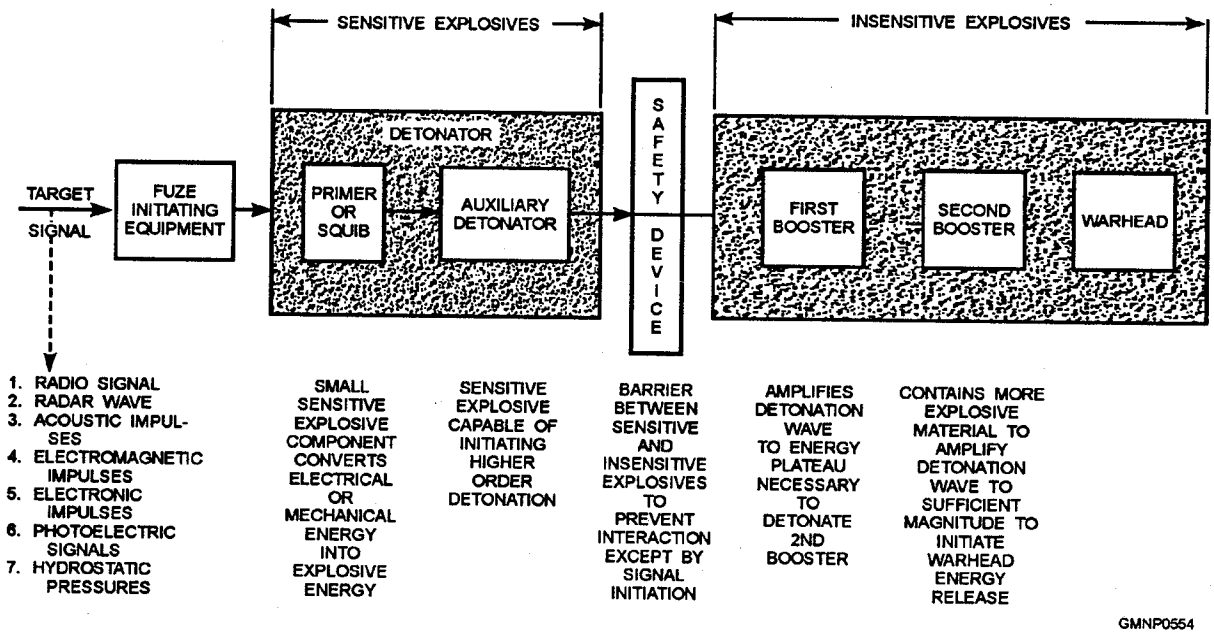

Figure 9-27.—Schematic of typical explosive train with safety device.

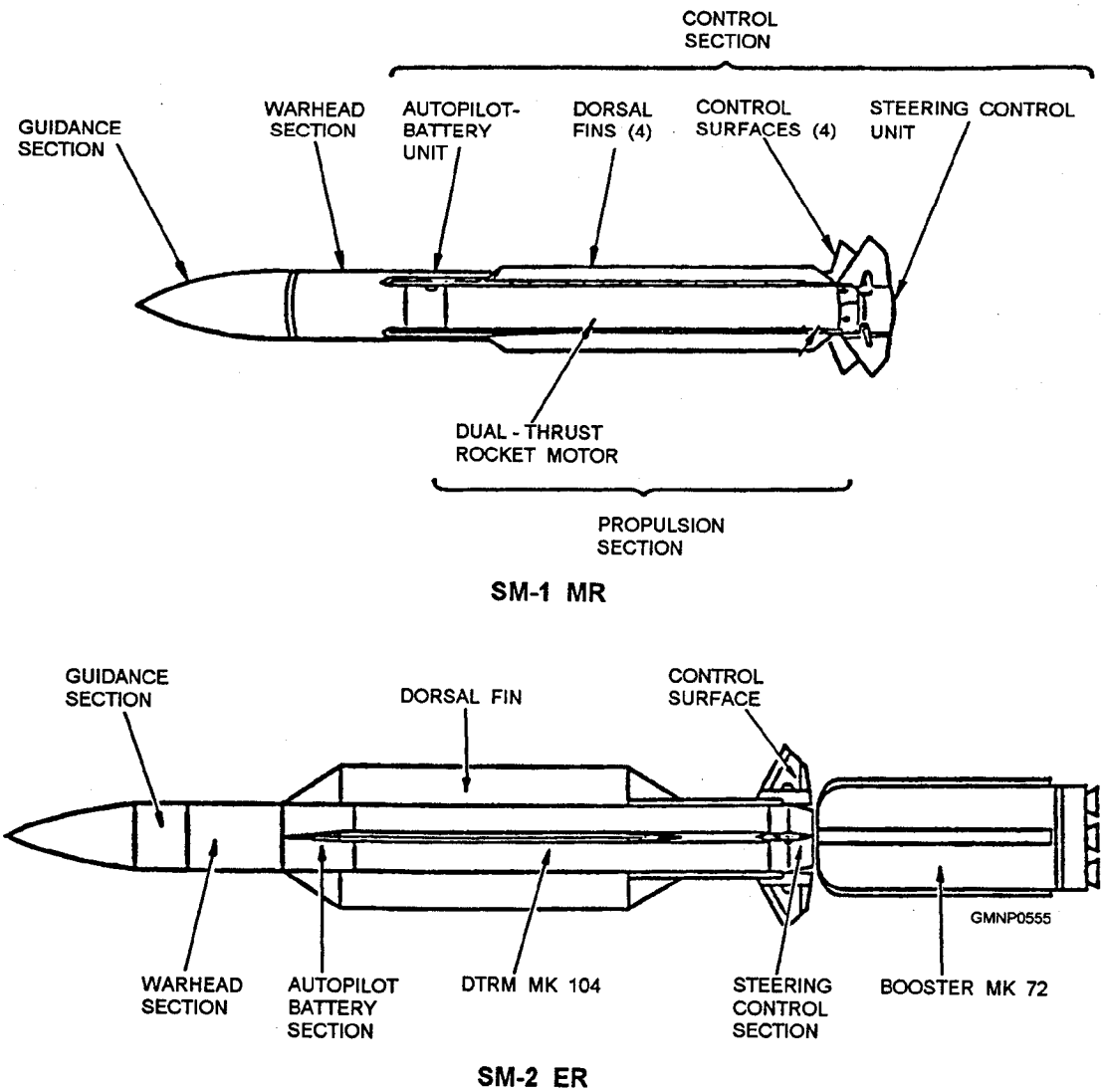

Figure 9-28.—SM-1 MR and SM-2 ER major sections, components, and physical configuration.

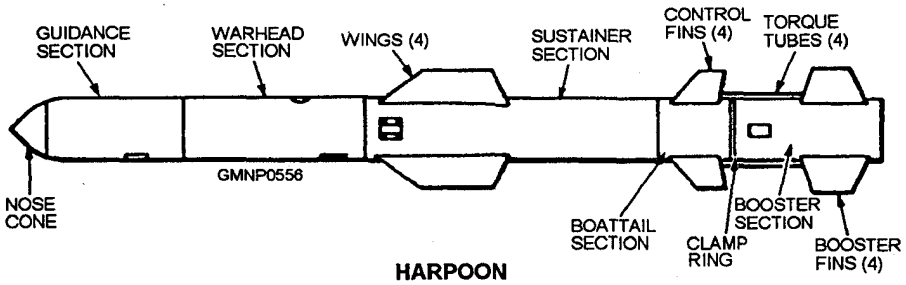

Figure 9-29.—Harpoon missile.

primarily against air targets. The popular designation of the missile is expressed as SM-1 MR medium-range missile and SM-2 ER extended range missile. SM-2 missiles are used on vertical launching system (VLS) ships.

The Harpoon missile (fig. 9-29) is a subsonic, low altitude cruise missile for use against surface targets only. It is equipped with a self-contained midcourse (cruise) guidance system and uses advanced active homing techniques with countermeasure capabilities. Harpoon is designed as an all-up-round (AUR) for all weather operations and is capable of engaging over-the-horizon targets.

Tomahawk cruise missile (fig. 9-30) is a long-range, subsonic, land-attack, and anti-ship missile with a solid propellant booster and a liquid propellant turbofan engine.

Missiles are identified by various methods. The military designation method is shown in table 9-1. The missile is classified as to its launch environment,

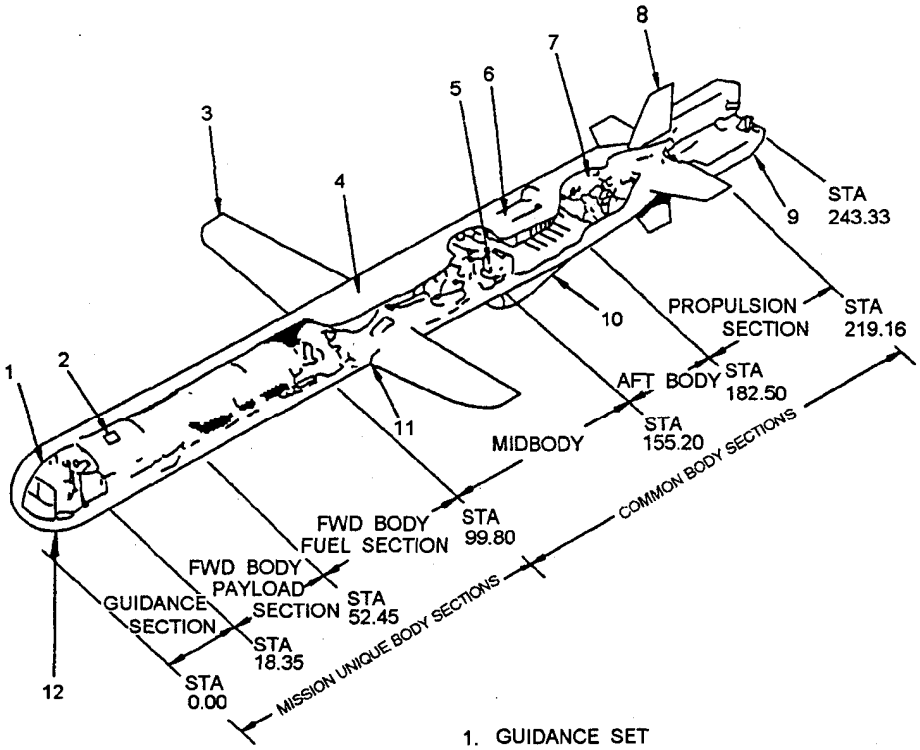

1. GUIDANCE SET
2. W80 WARHEAD
3. WING (2)
4. STANDARD MISSION COVER
5. AIR DATA PACKAGE
6. MISSION CONTROL MODULE
7. SUSTAINER ENGINE
8. FIN (4)
9. ROCKET MOTOR
10. ENGINE INLET
11. FUEL/DEFUEL PANEL
12. NOSE CONE/NOSE FAIRING/RESHAPED NOSE CONE/POSITIVE-RETENTION NOSE CONE

Figure 9-30.—Tomahawk cruise missile.

Table 9-1.—Missile categories

LAUNCH ENVIRONMENT SYMBOLS

Letter	Title	Description
A	Air	Air launched.
B	Multiple	Capable of being launched from more than one environment.
C	Coffin	Stored horizontally or at less than a 45 degree angle in a protective enclosure (regardless of structural strength) and launched from the ground.
H	Silo Stored	Vertically stored below ground level and launched from the ground.
L	Silo Launched	Vertically stored and launched from below ground level.
M	Mobile	Launched from a ground vehicle or movable platform.
P	Soft Pad	Partially or nonprotected in storage and launched from the ground.
R	Ship	Launched from a surface vessel, such as ship, barge, etc.
U	Underwater	Launched from a submarine or other underwater device.

MISSION SYMBOLS

D	Decoy	Vehicles designed or modified to confuse deceive, or divert enemy defenses by simulating an attack vehicle.
E	Special Electronic	Vehicles designed or modified with electronic equipment for communications, countermeasures, electronic radiation sounding, or other electronic recording or relay missions.
G	Surface Attack	Vehicles designed to destroy land or sea targets.
I	Intercept-Aerial	Vehicles designed to intercept aerial targets, defensive or offensive roles.
Q	Drone	Vehicles designed for target, reconnaissance, or surveillance purposes.
T	Training	Vehicles designed or permanently modified for training purposes.
U	Underwater Attack	Vehicles designed to destroy enemy submarines or other underwater targets or to detonate underwater.
W	Weather	Vehicles designed to observe, record, or relay meteorological data.

VEHICLE TYPE SYMBOLS

M	Guide Missile	Unmanned, self-propelled vehicles designed to move in a trajectory or flight path all or partially above the earth's surface and whose trajectory or course, while the vehicle is in motion, can be controlled remotely or by homing systems, or by inertial and/or programmed guidance from within. This term does not include space vehicles, space boosters, or naval torpedoes, but does include target and reconnaissance drones.
N	Probe	Non-orbital instrumented vehicles not involved in space missions that are used to penetrate the aerospace environment and report information.
R	Rocket	Self-propelled vehicles without installed or remote control guidance mechanisms, whose trajectory cannot be altered after launch. Rocket systems designed for line of sight are not included.

The military designation of the ASROC missile is RUR-5A since it is a ship-launched rocket designed to destroy enemy submarines. It is the first (A) of its assigned design number (5).

If necessary, to denote a special status, one of the following letters is affixed before the military designation.

STATUS PREFIX SYMBOLS

J	Special Test (Temporary)	Vehicles especially configured simply to accommodate test.
N	Special Test (Permanent)	Vehicles so modified they will not be returned to original use.
X	Experimental	Vehicles under development.
Y	Prototype	Preproduction vehicles for test.
Z	Planning	Vehicles in planning stage.

mission, and vehicle type. For example, a RIM designation represents a ship-launched guided missile designed to intercept air targets.

A type and configuration letter-number combination can be added to the basic designation. For example, RIM-66A identifies a STANDARD SM-1A missile. An RGM-84A identifies a ship-launched surface attack guided missile or the HARPOON missile.

SUMMARY

In this chapter we have discussed the missile basic systems, the principles of guided missiles, and the SMS guided missiles. We covered

1. Structures—or the airframe,

2. Control systems—with references to aerodynamics and how flight attitude or stability was controlled,

3. Guidance systems—with references to various types (command, homing, and self-contained) and how they interact with the control system to control flight trajectory,

4. Propulsion—with references to air-breathing jet engines (turbojets) and solid-fuel rocket motors,

5. Warheads—with references to the payload, fuze, and S&A device, and

6. SMS guided missiles—used on surface launched ships.

For specific and detailed discussions of particular systems, refer to system technical manuals and the references cited in an appendix to this TRAMAN.

CHAPTER 10

TARGET DETECTION AND WEAPONS CONTROL

Up to now we have centered our discussion on guns and GMLSs and their operation. However, modern weapons systems rarely, if ever, function independently. A complete weapons system also includes elements that detect and track the target, compute a fire control solution, and generate control orders.

We will begin this chapter by describing some of the equipment and processes used to detect and identify a target. We will then describe the different elements involved in the fire control problem and the major fire control systems now in the fleet. We will introduce the subject of system testing and a very important piece of equipment, a guided missile training round (GMTR).

THE DETECTION PROCESS

LEARNING OBJECTIVE: Describe the major components of Navy fire control systems.

The modern detection process involves more than the location of possible targets by the sensors of the ship. Before sensor information from your ship (or other ships) can be fully used by the weapons system, it must first be processed. Processing involves the extraction of data concerning the course of the target, speed, bearing, range, identity as friend or foe, and type of target (air, surface, or subsurface). This information is called target data and it is processed by the Naval Tactical Data System (NTDS). The NTDS function is central to the modern detection process, so we will describe it first-then we will describe the types of sensors that supply the data to the NTDS.

Many different detection systems are in use today. A discussion of the operation of each one is beyond the scope and intent of this book. Therefore, in this chapter we will not discuss specific systems, only the general characteristics of the different system types. For detailed information on a specific system, consult the system's technical manual(s).

NAVAL TACTICAL DATA SYSTEM

The NTDS consists of high-speed computers, data display consoles, communication links, and operational computer programs. The total system functions to collect, analyze, and correlate sensor data to obtain a clear picture of the tactical situation. A good tactical picture includes complete target data on all ships, aircraft, and submarines in the area of concern. This picture is then converted to digital format and supplied to the weapon systems of the ship and to other ships over the communications data link

Figure 10-1 is a simple line drawing that shows the NTDS function. The picture supplied by the NTDS is a "real time" display; it is not a projection, but a representation of the tactical situation as it is at that moment, based on available sensor data. Some weapon systems are able to use raw sensor data to engage targets, although this use is not the most effective mode of operation. The use of raw data is normally reserved for casualty mode use.

When two or more ships operate together, one ship will be designated to maintain the communications link network This designation allows ships in the task force to feed target data into the link for use by the entire group. Each ship in the link will be able to use all the processed target data from all the other ships in the link Access to this collective data serves to broaden the tactical picture for the task force commander and for individual commanders as well.

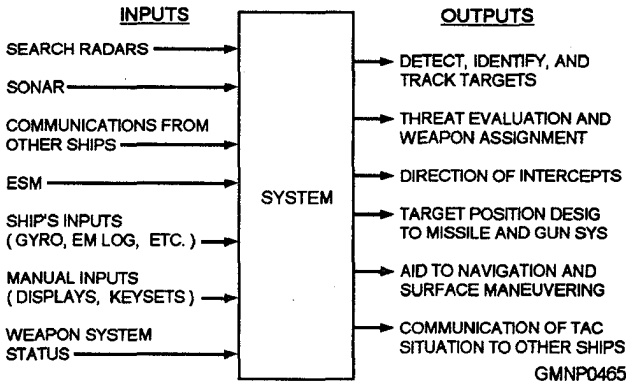

Figure 10-1.—The NTDS function.

In the past, as with other systems, the NTDS was considered an individual unit instead of a component of the combat system of the ship. This is no longer true. Older ships are adopting a one-system philosophy. Newer systems are designed as a single system. The NTDS function is now being performed by the same equipment that performs other functions formerly not associated with NTDS. The AEGIS weapon system is the first system designed under the one-system concept. The AEGIS Command and Decision (C&D) system not only performs the NTDS function but also controls the electronic warfare (EW) system, IFF challenges, and several other functions as well.

SENSORS

The NTDS collects data from each of the sensors of the ship (radar, IFF, ESM, and sonar) as well as other target data of the ship over the data link, We will now provide brief descriptions of the type of information each sensor supplies. Sonar will not be covered in this text.

Radar

The Navy uses a variety of search radars to detect surface and air targets. However, they can all be classified as either surface search/navigation or two- or three-coordinate air search radars.

SURFACE SEARCH/NAVIGATION RADARS.— Radar sets (such as the AN/SPS-65) are short-range, two-coordinate, narrow-beam radars capable of good discrimination in range and bearing for surface search and low-flying aircraft. They are also valuable because of their ability to detect modern low-flying antiship missiles.

THREE-COORDINATE RADARS.— Three-coordinate radars (such as AN/SPS-48 or AN/SPY-1) are normally the primary source of air target information. These radars provide precise air search data consisting of range, bearing, and elevation angle to the NTDS or weapons direction system (WDS). These radars also provide IFF (identification, friend or foe) data. IFF is a subsystem that issues an electronic challenge to aircraft. Depending upon the response or lack of response from the aircraft, the aircraft is determined to befriendly or hostile. The air search data and synchronized IFF interrogation information are displayed on operator consoles in the combat information center (CIC) for target engagement evaluation. Electronic counter-countermeasure (ECCM) features improve the display when jamming environments are encountered.

TWO-COORDINATE RADARS.— An alternate source of air target information for a weapon system is a two-coordinate radar. These are the primary means for detection of long-range air targets. These radars (such as the AN/SPS-49) provide course range and bearing information and IFF capabilities similar to those of the three-coordinate radars. They do not, however, provide elevation information.

Electronic Support Measures

Electronic support measures (ESM) is the passive side of the total elecronic warfare capability of the ship. Its function is to detect electronic emissions and aid in the rapid identification of the source platform or weapon. A low-flying antiship cruise missile (ASCM), such as our Harpoon, may not be detected by the radar of your ship. The first indication you might see is the electronic emissions of the missile seeker when it initiates its homing phase. This first indication could give you just 90 seconds, or less, to react before the missile strikes your ship.

Modern ESM not only detects the emission but also supplies the operator with a suggestion regarding the source. The operator must then visually verify the accuracy of the suggestion. If he agrees with the evaluation, the push of a button sends the data to the NTDS. Should he disagree, he inputs his evaluation through a manual keyboard.

The LAMPS III helicopter is also equipped with ESM equipment that further extends sensory range. A single ESM unit can only supply target bearing data. The LAMPS III helicopter, however, can be sent out away from the ship to monitor the same emission, thus allowing a vector of the position of the target and range data. Two ships can perform the same maneuver.

Figure 10-2 shows the configuration of a modern weapon system aboard an AEGIS-equipped ship. Remember that the NTDS function is accomplished by the C&D equipment in the AEGIS system.

WEAPONS DIRECTION SYSTEM

LEARNING OBJECTIVE Discuss the function of the weapons direction system (WDS).

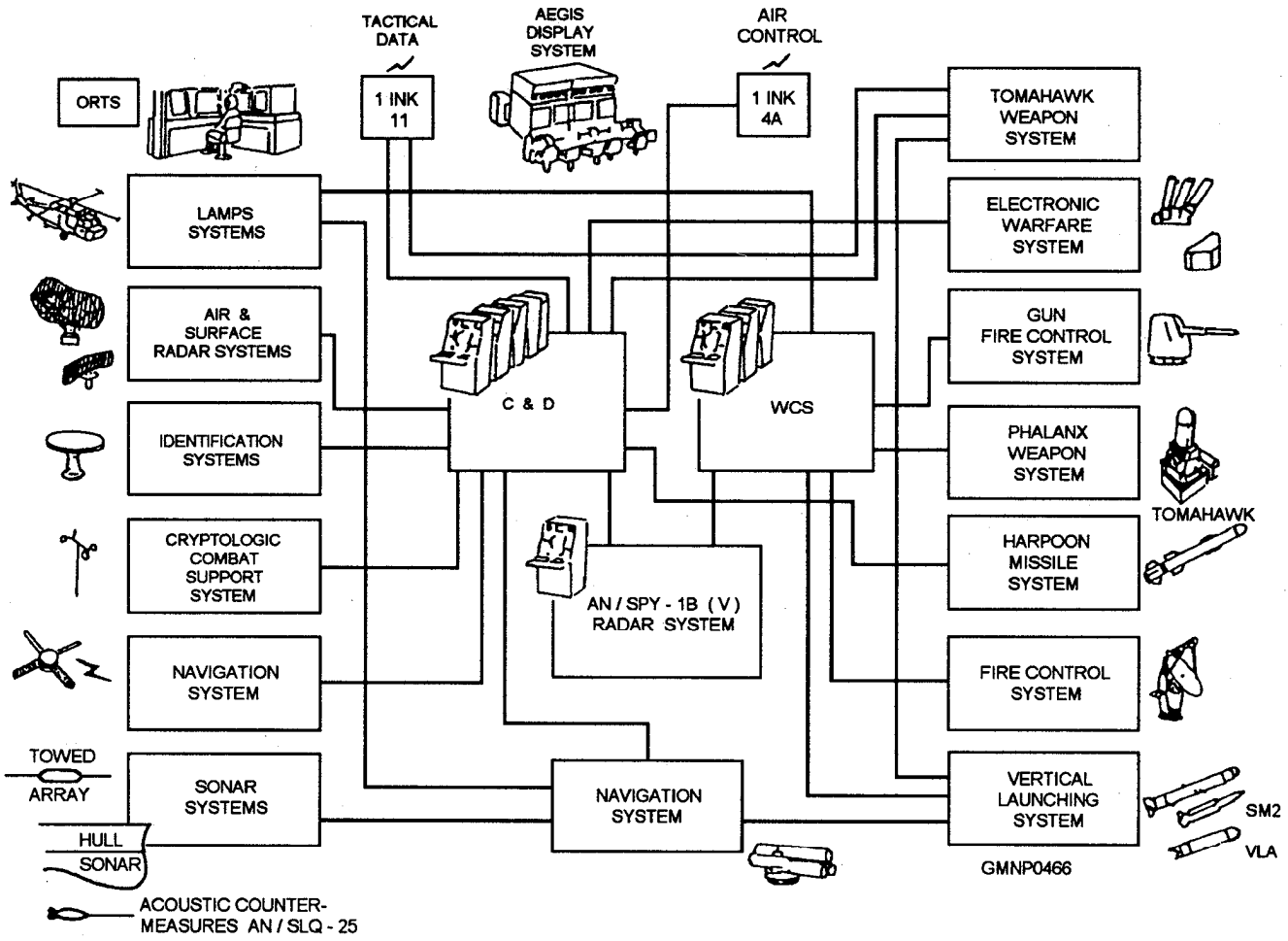

Figure 10-2.—The AEGIS combat system.

The weapons direction system (WDS), also referred to as weapons control system (WCS), functions to schedule, control, and assess the engagement of targets with the weapon systems of the ship. WDS consists of a computer set, a computer program, and two or more operator consoles.

WDS receives target data from NTDS. Each target is analyzed and assigned a threat priority. The system then assigns a weapons system to engage the highest priority target. Weapons system assignment includes (in the case of a missile engagement) the selection of the number and type of missiles to be fired, as well as which director will be used to track and illuminate the target. In the case of a fully automatic engagement, the system will also initiate missile firing. However, not all systems are capable of full automatic operation. In all cases, the operator may manually override the system to alter the method of engagement.

Before the advent of WDS, each of these functions was performed by the individual action of system operators. Therefore, response time and accuracy were limited to the speed and skill of the operators. A rapid and accurate response is required to defend against the sophisticated modem weapons currently in the arsenal of the world. WDS enables the entire engagement (or portions thereof) to be executed rapidly and automatically.

The WDS computers programmed to prioritize and engage targets that exhibit certain characteristics. In addition to this programming, the operator consoles can also be programmed to include quick reaction (QR) zones. These zones determine at what range, and from which direction, approaching targets are automatically engaged. These parameters are constantly updated as the tactical situation changes. QR zones may also be used to help make sure friendly ships and aircraft are not mistakenly engaged.

FIRE CONTROL

LEARNING OBJECTIVE: Identify the components of a basic fire control system and discuss the function of each.

A basic fire control system consists of a computer, a director and radar, and a stable element. The following sections will provide a brief description of each of these.

COMPUTER

The definition of a computer is any device capable of accepting data, applying mathematical operations to that data, and obtaining useful information from those operations. A fire control computer accepts target and own-ship's data, processes it, and provides a solution to the fire control problem. Own-ship's data includes course, speed, pitch, and roll. Also included are other variables, such as wind direction and, in the case of guns, projectile initial velocity. This data will be discussed further as we describe the fire control problem later in this section.

The fire control solution for a gun engagement consists of gun mount train and elevation orders, fuze setting orders, and in some cases, gun sight orders. For a missile engagement, the computer supplies launcher train and elevation orders and missile prelaunch programming.

A guided missile, unlike a gun projectile, can change course in flight. Therefore, the missile fire control computer continuously updates the solution for target intercept after the missile is fired. The updated solution is transmitted to the missile that then corrects its course to intercept the target. These actions are occurring during the midcourse phase of an SM-2 missile engagement. The SM-2 engagement also requires target illumination to be scheduled and ordered (during the terminal phase of missile flight). These two actions are also accomplished by the fire control computer.

DIRECTOR AND RADAR

The fire control system's director and radar are discussed as a single unit since, once assigned, their combined outputs are the primary source of target information for the fire control computer.

The radar antenna is mounted to the director. Once assigned by the WDS, the director "slews" to the ordered bearing and elevation where the radar conducts a search for the target. The search is controlled by a subsystem that moves the director in a predetermined pattern around the ordered position until the radar "acquires" the target. Once acquired by the radar, a subsystem of the radar unit controls the director to keep the radar "locked on" the target. The system then begins to track the target. While locked on and tracking, the radar and director continuously provide precise target range, bearing, and elevation data to the computer. Radar provides target range, and the director, based on its train angle and the elevation angle of the radar antenna, provides target bearing and elevation data.

STABLE ELEMENT

A ship, by its very nature, is in constant motion. The weapon systems, especially gun systems, require a stable platform to deliver accurate fire. Since it is impossible to build a ship that is not subject to constant movement, the stable element input is added to the fire control computer. A stable element is a gyroscope mounted to gimbals. Its output provides the computer with a stable horizontal reference from which to compute a fire control solution. Some older systems have their own dedicated stable element, while most newer systems use an input from the gyro of the ship.

THE FIRE CONTROL PROBLEM

LEARNING OBJECTIVE: Discuss the characteristics of the fire control problem and the components involved.

To deliver accurate fire, a fire control system must consider and compensate for own-ship's movement, gun characteristics, natural forces, and target movement. Each compensation involves a different set of variables. Compensating for these variables is the essence of the fire control problem.

Own-ship's movement and characteristics involve platform stabilization (stable element), parallax, and interior ballistic considerations. Natural forces are compensated for as exterior ballistics. Target movement involves considering exact target position in reference to your ship, then predicting its future position.

PARALLAX

If guns were physically located at the reference point (the director), projectiles fired from the guns would hit the target without further correction. The guns are, of course, not located at the reference point but are some distance forward or aft of this point and below it (the director is located high on the superstructure). This difference in location puts the gun at a different angle from the target than the director, giving each unit a different line of sight to the target. Unless corrected, this difference will result in large errors in accuracy. The parallax correction is normally accomplished in the fire control computer.

BALLISTICS

Ballistics is the science of projectile motion. It is divided into two branches—interior and exterior ballistics. Interior ballistics is the study of projectile motion while inside the gun. Exterior ballistics pertains to the projectile motion after it leaves the gun.

Interior Ballistics

The speed at which a projectile is traveling at the instant it leaves the gun bore is known as initial velocity (IV). The initial velocity of a projectile must be known to predict its trajectory. Initial velocity is determined by the gun, the projectile, and the propelling charge. Projectiles and propelling charges are standardized. This standardization means that all size, weight, and shape variations are predetermined. The only variables left to consider are the condition of the gun and the temperature of the propelling charge. The propelling charge temperature is determined by averaging the powder magazine temperatures for the previous 3 days.

Figure 10-3 shows the components of a gun. When a projectile and propelling charge are loaded into the gun, the projectile rotating band engages the rifling in the gun bore. The rotating band forms a seal at the forcing cone. When the gun is fired, the expanding gases from the burning propellant push the projectile through the bore and out the muzzle. As the projectile passes through the bore, the twisted rifling imparts a spin to the projectile that stabilizes it in flight.

Each firing wears on (erodes) the interior surfaces of the gun. This erosion results in a gradual enlargement of the bore. Erosion begins at the rear and extends to the end of the bore as the gun is used. As the bore enlarges, the seal becomes less effective, resulting in a slower initial velocity.

Data from the annual star gauge inspection and from the regular projectile seating and distance gauge (PSDG) tests is used to compute IV The determined IV is then entered into the fire control computer for consideration in the final fire control solution.

Exterior Ballistics

Exterior ballistics starts with a projectile traveling at a known speed (initial velocity) and in a known direction. This direction, called the line of fire (LOF), coincides with the center-line axis of the gun bore. Once the projectile leaves the gun, you have no further control over its trajectory. Natural forces, such as gravity, air, wind, drift, and the rotation of the Earth, act on the projectile in flight to alter its trajectory. Therefore, to hit a target, it is necessary to compensate for the effects of these forces by offsetting the LOF of the gun before firing. For example, if it is known that a projectile is going to drift right, the gun should be trained to the left. If it is known that a projectile is going to curve downward, the gun should be elevated.

NOTE

The ultimate purpose of a gun fire control system is (1) to find the correct position for the gun barrel to make the projectile fall where desired and (2) to put the gun in that position.

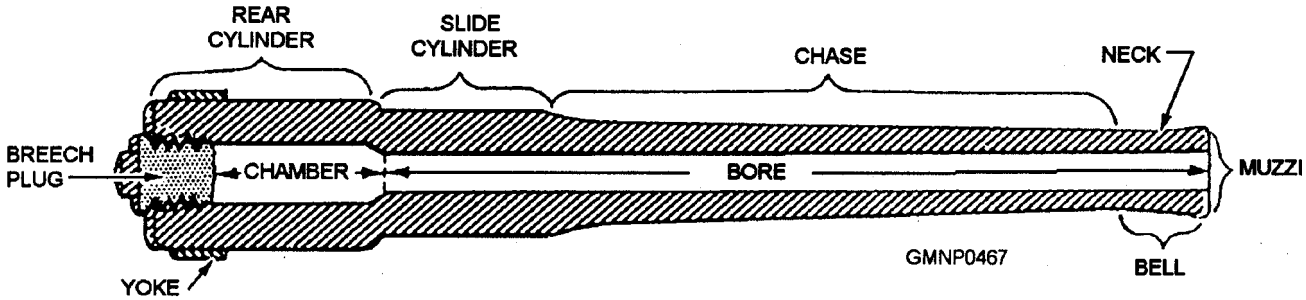

Figure 10-3.—Cross section of a gun.

GRAVITY.— Gravity is a continuous attracting force, acting perpendicular to the surface of the Earth, that tends to pull all objects toward the Earth. Without gravity, a projectile (fired in a vacuum) would continue to travel in the direction it was fired until something interfered with its flight.

Gravity acts on a fired projectile, causing it to begin to fall as soon as it leaves the muzzle of the gun. The projectile, however, is traveling forward and falling at the same time. The projectile has two forces acting on it: (1) the momentum and (2) the pull of gravity. The path of the projectile, as a result of these two forces, is a curved trajectory.

AIR.— When a projectile is traveling through the air, it takes a different path from the one it would follow in a vacuum. In a vacuum, with gravity as the only retarding factor, an angle of departure and an angle of fall of the projectile would be identical (fig. 10-4). The maximum ordinate would be in the exact center of the trajectory.

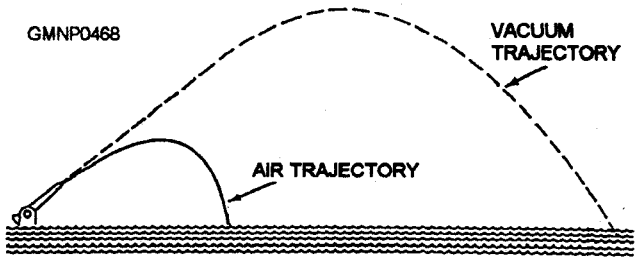

Figure 10-4.—Vacuum and air trajectories for the same elevation angle.

Air resists the motion of a body passing through it. This resistance is a form of friction that slows the movement of the body. The result is that a certain amount of velocity is being lost for each second of projectile flight. The longer the projectile travels through the air, the slower it goes. Notice the steepness of the descending curve and the location of the maximum ordinate in the air trajectory. These characteristics, as well as the greatly reduced range, are due to air resistance.

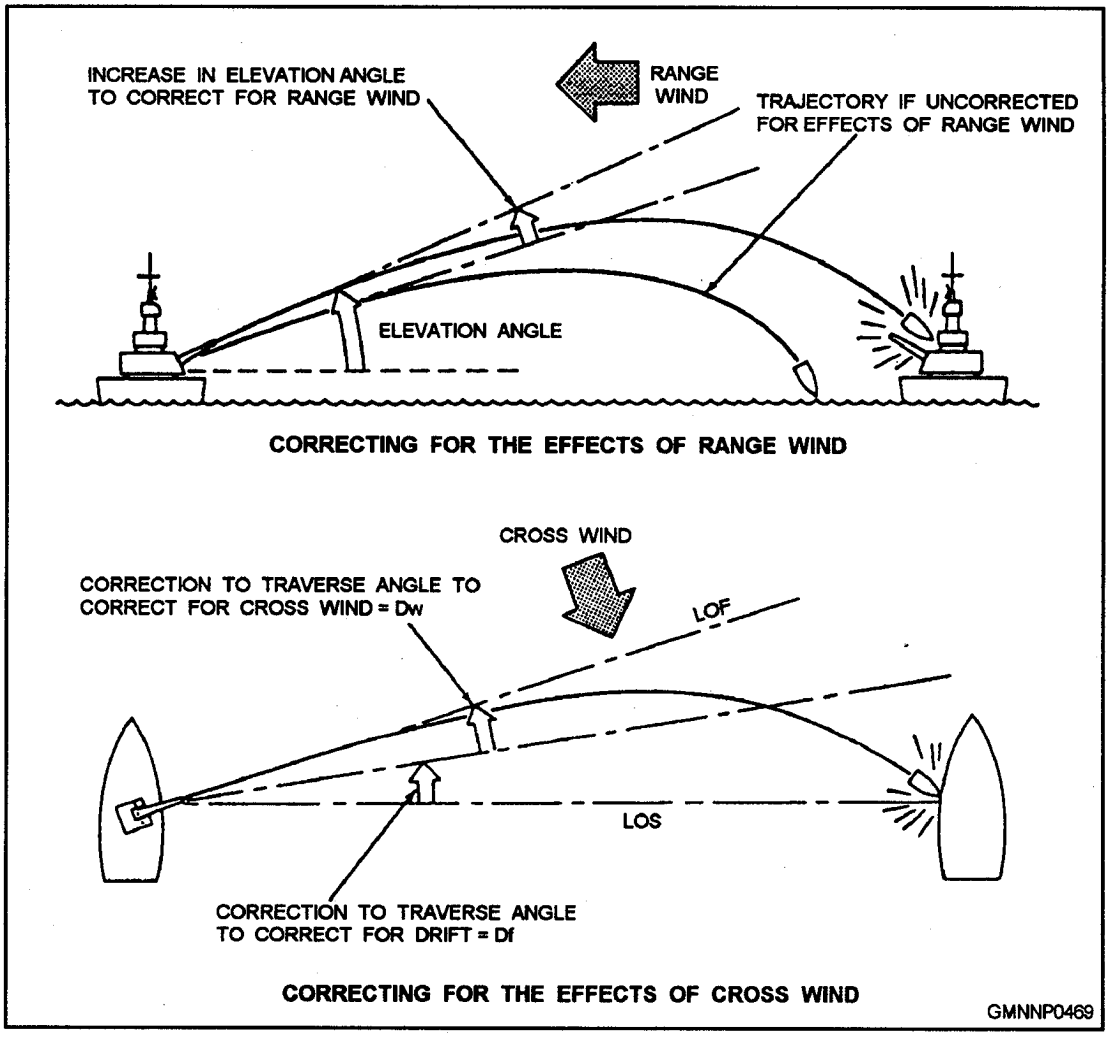

Figure 10-5.—Correcting for the effects of wind.

The density of the air determines the amount of resistance the projectile will experience. Air density depends on temperature and barometric pressure, both of which are changing all the time. Dense air will slow a projectile more than thin air. Density also varies at different altitudes, which further complicates the equation.

WIND.— The effect of wind on a projectile in flight is obvious. Depending upon its force and the direction it is coming from, wind can cause a projectile to fall short, overshoot, or fall to the left or right of the target. As with air density, the longer a projectile is in flight, the more it will be affected by wind. The size of a projectile is also a factor: the larger the projectile, the more it will be affected.

True wind is used in all fire control calculations. If the wind is blowing along the LOF, either with or against the projectile, it is called range wind (fig. 10-5). If the wind is blowing at right angles to the LOF, it is called cross wind. Range wind is compensated for by increasing or decreasing gun elevation angle. Corrections for cross wind are made to the train angle of the gun. Normally, however, the wind will be at some angle to the LOF. In that case, the true wind must be broken down to the range and cross wind components (fig. 10-6). This calculation allows for the realized effect of the wind in each direction.

DRIFT.— Naval guns are rifled to give a spinning motion to the projectile. The spinning projectile assumes the properties of a gyroscope. The gyroscopic actions tend to keep the projectile pointed along the trajectory and prevent it from tumbling. These actions make the projectile almost rigid in its trajectory and ensure it will land point first. This rigidity makes the flight characteristics of the projectile predictable.

In addition to this useful effect, gyroscopic action causes the harmful effect of drift (fig. 10-7). Notice that the effect increases with range. Drift is always to the right in a gun with right-hand rifling (the twist of the rifling is to the right from the chamber to the muzzle).

EARTH'S ROTATION.— In our discussion so far we have assumed that the Earth is flat and does not rotate. For ranges up to about 20,000 yards or so, this assumption does not seriously affect our fire control solution. At ranges over 20,000 yards, the rotation of the Earth has a serious affect.

An object in motion above the surface of the Earth tends to turn toward the right in the Northern Hemisphere and toward the left in the Southern Hemisphere. Corrections are made to the left or right accordingly. The correction is only made on guns with bores larger than 5 inches.

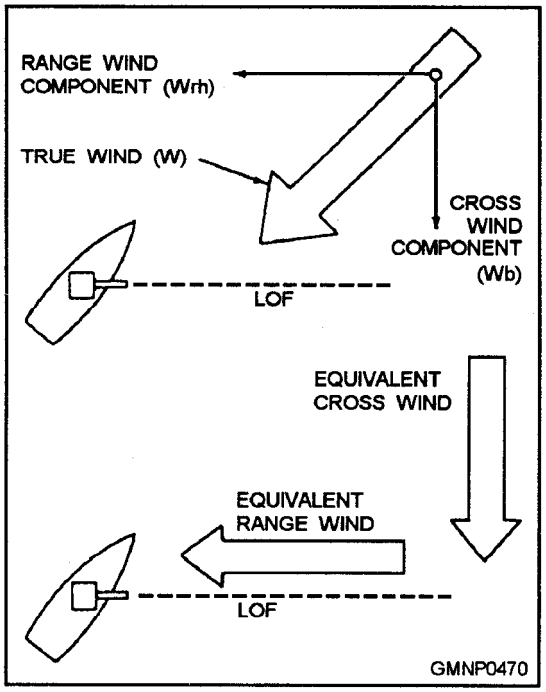

Figure 10-6.—Readmg true wind.

Frames of Reference

A frame of reference is a system of lines, angles, and planes, within which target position can be measured and lead angles computed. A position can be described only by relating it to a known reference point. A reference frame has a point, called the point of origin or reference point, from which all measurements are made.

Two frames of reference are used by fire control systems. One is rigidly attached to the ship, while the other is considered rigidly attached to the surface of the Earth. The frame of reference of the ship has its point of origin built into the fire control system. All measurements are made from this point. This point is unstabilized, subject to the pitch and roll of the ship. The frame of reference of the Earth is a horizontal plane established by the stable element, independent of the pitch and roll of the ship.

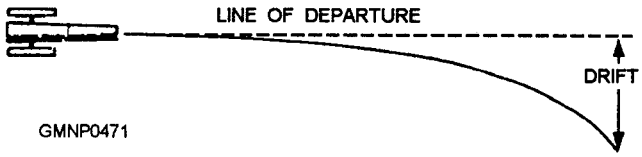

Figure 10-7.—Effect of drift.

LINES.— Given the effects of exterior ballistics, two lines are required. One line, called the line of sight (LOS), is used to establish the present location of the target; the second line, called the line of fire (LOF), is used to establish the position of the gun bore with respect to the LOS. The LOS is the primary reference from which the offsets are made to establish the LOF.

LEAD ANGLES.— Two lead angles are considered in the fire control problem— sight angle and sight deflection (fig. 10-8). Sight angle is the difference between the LOF and the LOS, measured on the plane perpendicular to the trunnion axis. Sight deflection is the angle that the plane through the gun bore is deflected left or right from the LOS.

REFERENCE PLANES.— Reference planes are flat surfaces that may extend in all directions to infinity. Normally, these planes are pictured with boundaries equal to the range of the fire control problem, as shown in figure 10-9.

The fire control system establishes target location as a point on a plane using the same three-coordinate system described earlier in this chapter. Once the position, speed, and direction of travel of the target are determined, its future position can be accurately predicted

The steps in the solution of the fire control problem can be described as follows:

- Determining present target location in relation to own ship
- Predicting future target position in relation to own ship
- Stabilizing the system

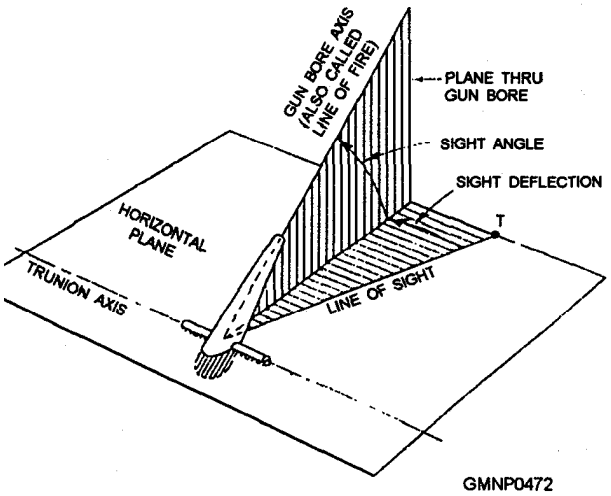

Figure 10-8.—Lead angles in a surface problem.

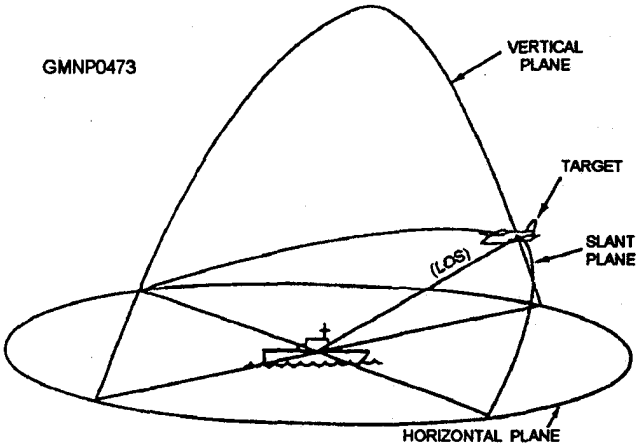

Figure 10-9.—Reference planes.

- Calculating the required correction to the gun or launcher train and elevation orders
- Transmitting the data to the delivery device

We have attempted to cover the basic elements involved in the fire control problem. Each element must be compensated for exactly, because once fired, a gun projectile cannot be redirected. The entire problem is, however, much more complex than the general description we have provided. The next section provides a more detailed description of the actual systems used in solving the gunfire control problem.

FIRE CONTROL SYSTEMS

LEARNING OBJECTIVE: Describe the fire control systems currently in use.

Several fire control systems (FCSs) are currently in use aboard U.S. Navy ships. The most modern of these is the AEGIS weapon system. AEGIS is a complete system, incorporating all the elements of a weapon system. It is included here in the control section because of the unique advancements it uses in the integration of control systems. We will provide a basic description of the AEGIS system, the Mk 34 GWS, the Mk 86 GFCS, and the Mk 92 FCS. These systems represent the most modern fire control capabilities in the world and should be in our inventory well into the next century.

AEGIS WEAPON SYSTEM

The AEGIS weapon system is a fast-reaction, high-performance, computer-controlled system that

uses a multipurpose radar to detect contacts in all directions. It is the only system in the free world that can detect, track, and engage multiple threats while maintaining continuous surveillance from horizon to zenith, AEGIS is the first system in the Navy to be capable of a fully automatic reaction to intense air warfare.

AEGIS is equipped with embedded computer-controlled tests that continuously monitor the system to detect equipment failures. When a failure is detected, the system automatically reconfigures using backup systems to keep the system operational. These features make AEGIS the most reliable system in the fleet.

The AEGIS weapon system Mk 7, as shown in figure 10-10, is made up of the following nine elements:

1. AN/SPY-1 Radar
2. Command and Decision (C&D) System
3. Weapons Control System (WCS)
4. Fire Control System (FCS)
5. GMLS Mk 26 or VLS Mk 41
6. Standard Guided Missile
7. AEGIS Display System (ADS)
8. Operational Readiness Test System (ORTS)
9. AEGIS Combat Training System (ACTS)

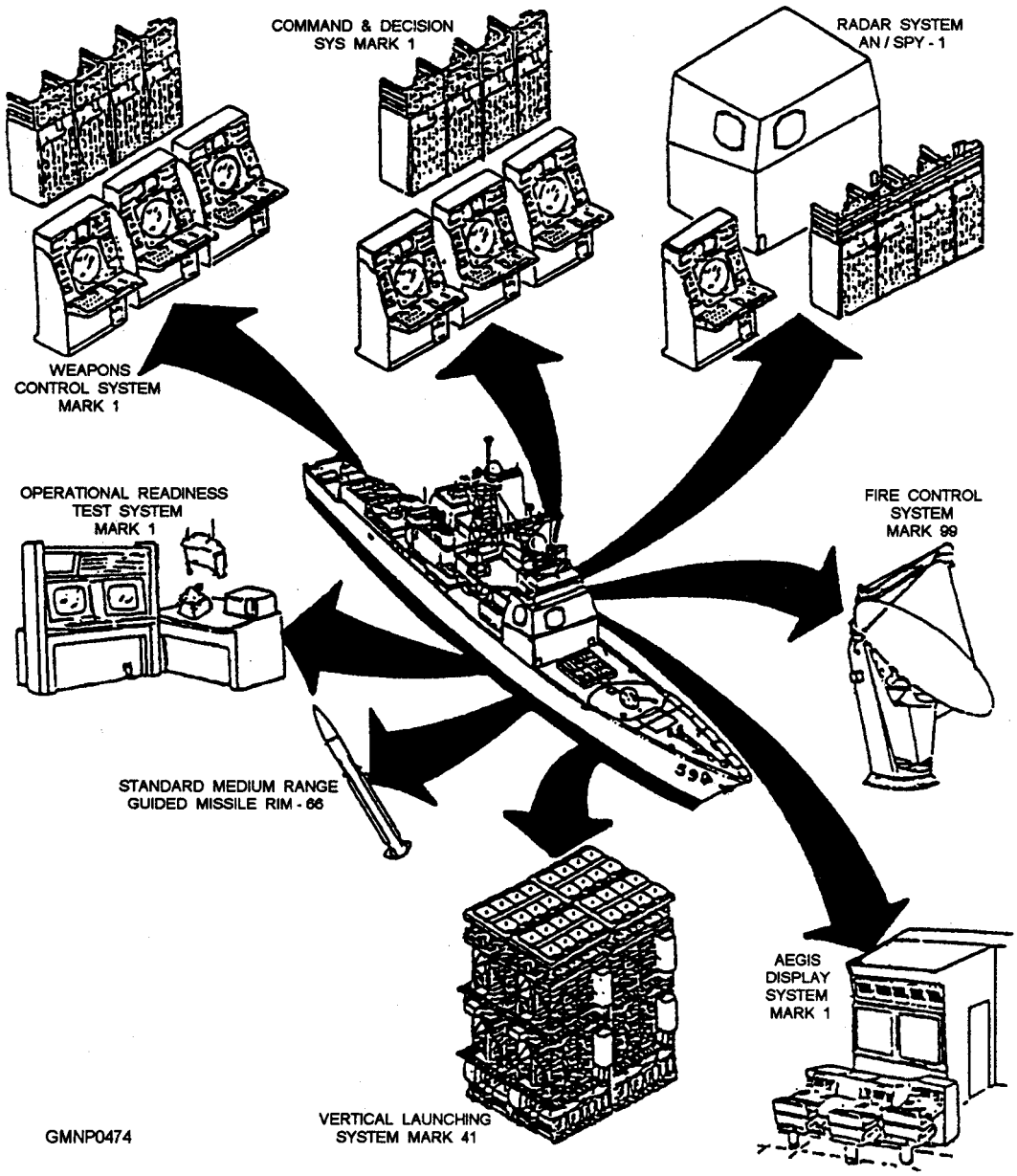

Figure 10-10.—AEGIS weapon system Mk 7 major elements.

Of the nine elements, seven have sophisticated computer programs for operation, control, and interface. These are the AN/SPY-1, C&D, WCS, FCS, ADS, ORTS, and ACTS. Operators manage and control the C&D, WCS, and SPY programs with doctrine statements. These statements allow the operator to define parameters that control the computer program for the tactical situation. Doctrine statements define automatic actions for targets meeting specific conditions.

A general description of each of the major elements of the AEGIS weapon system is offered here. The Standard missile and both launchers will not be covered.

AN/SPY-1 Radar System

The AN/SPY-l radar system is the primary search and track radar for AEGIS-equipped ships. It is a multifunction, phased array radar, capable of three-dimensional surveillance, while simultaneously providing fire control tracking for hundreds of air and surface targets in clear and ECM environments. In addition to search and track, it provides midcourse guidance to the Standard missile (SM-2).

Command and Decision System

The command and decision (C&D) system is a manned computer and display complex that coordinates and controls the AEGIS mission. C&D operators manage automatic CIC operations related to the following:

- Air, surface, and subsurface engagements
- Electronic warfare system control
- Data link control
- IFF challenges
- User defined information alerts
- Weapon tight zones

Weapons Control System

The weapons control system (WCS) schedules, controls, and assesses all air, surface, and subsurface engagements. It is the interface between the C&D and the FCS of the delivery system.

Fire Control System

The fire control system (FCS) provides illumination control for Standard missile engagements. WCS assignment orders and AN/SPY-1 target data make a designation source for the FCS illuminators. The FCS consists of four AN/SPG-62A radar sets. These four sets permit the illumination of multiple targets simultaneously.

AEGIS Display System

The AEGIS display system (ADS) is a computer-controlled display complex that provides various pictures and information of the tactical environment. With the ADS, commanders can observe and control a graphic representation of selected tracks, coastal maps, weapons release zones, and specific warfare environments. After entry of selected information, the displays are automatically updated in regard to own-ship's position. The ADS receives all track information from the C&D system.

Operational Readiness Test System

The operational readiness test system (ORTS) is a computer-controlled test and monitor system that performs automatic fault detection, fault isolation, status monitoring, and system reconfiguration. When a fault occurs, the ORTS automatically assesses and displays the highest level of system impact. Through a keyboard, the operator can initiate tests, evaluate system performance, and load programs into the various AEGIS computers. When tests are being conducted the system uses embedded test equipment throughout the system to measure voltages, analyze data, and measure power and phase.

AEGIS Combat Training System

The AEGIS combat training system (ACTS) enables shipboard personnel to conduct highly integrated multifaceted warfare training scenarios. It also provides the capability to record and print out specific training events for self-evaluation.

All these elements form the core of the AEGIS combat system (ACS). The ACS also integrates and controls the following elements:

- Harpoon weapons system
- Gun weapon system
- LAMPS helicopter

- Electronic warfare system
- sonar
- Air and surface search radars
- Navigation system

The complete integration of all these systems serves to enhance the capability of a ship to engage and defeat numerous multiwarfare threats simultaneously.

MK 34 GUN WEAPON SYSTEM

The MK 34 gun weapon system (GWS) is a departure from past gun fire control systems. In line with the one-system concept, the Mk 34 GWS is designed as a fully integrated subsystem of the AEGIS Combat System (ACS) to include the fire control computer, gun mount, and sight. The Mk 34 GWS receives target engagement orders from the AEGIS command and decision (C&D) system. It receives target data from shipboard sensors, performs ballistic calculations, and generates gun control orders. Digital target data is provided primarily by the AN/SPY-1 phased array radar system, with the AN/SPS-67 surface search radar serving as the secondary source of target data. Figure 10-11 shows the functional interface of the Mk 34 GWS with other elements of the combat system.

The Mk 34 GWS will be installed on all new construction AEGIS ships beginning with the DDG-51 class destroyer. Several of the later Ticonderoga class cruisers will also be fitted with the Mk 34 GWS. The system consists of a Mk 160 gun computer system (GCS), a 5"/54 Mk 45 gun system, and an EX 46 optical sight. The following is a brief description of each of these components except for the 5"/54 Mk 45 gun that was described in chapter 6.

Mk 160 Gun Computer System

The Mk 160 gun computer system (GCS) receives target data from shipboard sensors to compute a ballistic

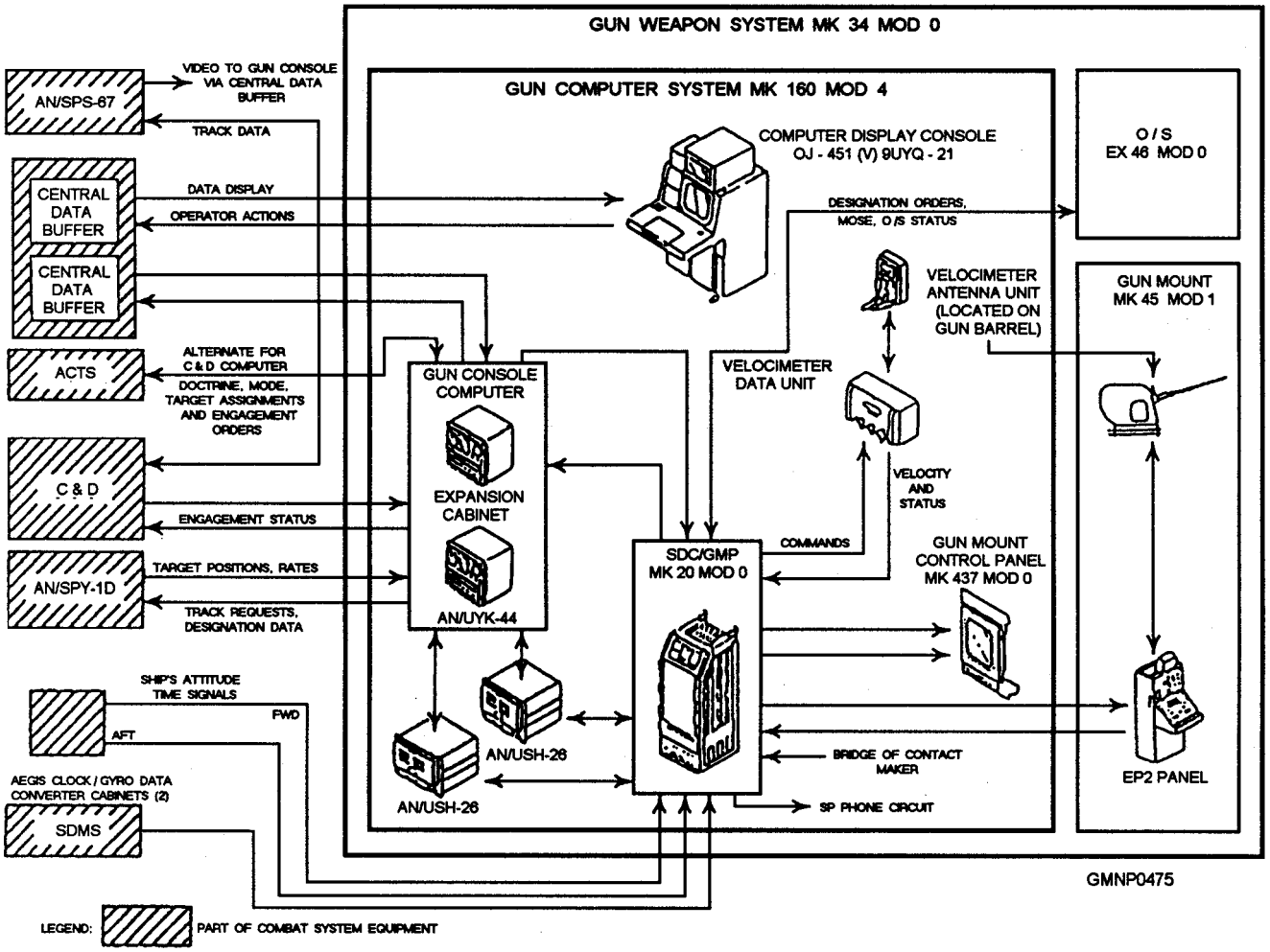

Figure 10-11.—Functional interface of the Mk 34 GWS.

solution. From this ballistic solution, it provides gun orders and selects projectile types. The GCS also generates the fire order to the gun mount. The Mk 160 GCS consists of the following elements:

- Gun console computer (GCC)
- Computer display console (CDC)
- Recorder-reproducer
- Signal data converter/gun mount processor (SDC/GMP)
- Gun mount control panel (GMCP)
- Velocimeter

GUN CONSOLE COMPUTER.— The gun console computer (GCC) serves as the primary interface between the GWS and the AEGIS C&D system and combat system sensors. It acts as a falter for target data, passing data for the selected target to the SDC/GMP.

COMPUTER DISPLAY CONSOLE.— The computer display console (CDC), also known as the gun console (GC), serves as the operator-to-GCS interface for providing target/system status and data entry displays. It also permits manual selection of the engagement mode and type of ammunition, queuing and engaging targets, entering ballistic data, and adjusting fire.

RECORDER-REPRODUCER.— The recorder-reproducer is a standard lightweight digital tape storage subsystem using a tape cartridge medium. The GCS uses two of these units to load operational programs, record, and retrieve system operational data.

SIGNAL DATA CONVERTER/GUN MOUNT PROCESSOR.— The signal data converter/gun mount processor (SDC/GMP) consists of two primary segments-the signal data converter (SDC) and the gun mount processor (GMP). Both are contained in a single watertight cabinet located in the gun mount. The GMP computes two ballistic solutions for the target being engaged, based on filtered target data, control commands, and other ship related information. The GMP converts ballistic solutions into gun orders that are transmitted to the gun mount by the SDC.

GUN MOUNT CONTROL PANEL.— The gun mount control panel (GMCP) is used to monitor and display GCS and GWS status in the normal modes of operation. The primary function of the GMCP, however, is to provide a casualty mode means of target data entry into the SDC/GMP should data not be available from the GC.

VELOCIMETER.— The velocimeter is a Doppler radar system used to measure projectile IV. The IV data is passed digitally to the GMP to update/correct ballistic computations. The velocimeter antenna is mounted directly to the gun above the barrel.

EX 46 Optical Sight

While still in development at this writing, some information is available on the EX 46 optical sight (OS). The sight is described as a stabilized imaging sensor. The OS will supplement the coverage of the sensors of the ship, allowing the operator to detect and track surface targets, support the engagement of counter-battery threats, and act as a safety check sight during gun operations.

MK 86 GUN FIRE CONTROL SYSTEM

The Mk 86 gun fire control system (GFCS) is a shipboard, digitally controlled system that directs gunfire against surface, shore, and air targets. The system is designed to control the 5"/54 Mk 45 rapid-free gun mount currently found aboard various platforms, including the DD-963, DDG-993, CG-47, CGN-36, CGN-38, and LHA-1 class ships.

Variations of the system integrate it with the missile FCS of the ship. The ship can use the Mk 86 system to supply air target tracking and continuous wave illumination (CWI) for control of SM-1 missile engagements.

Other improvements enable the system to control SM-2 engagements. In this text, however, we will discuss only the gun control function of the system.

Refer to figure 10-12 as we describe the major components of the Mk 86 Mod 10 GFCS. For ease of discussion, the physical units are grouped into related functions as follows:

- Operator consoles
- Power central
- Computer/peripherals
- Surface search radar
- Air action radar
- Data/video units
- Optical sighting system

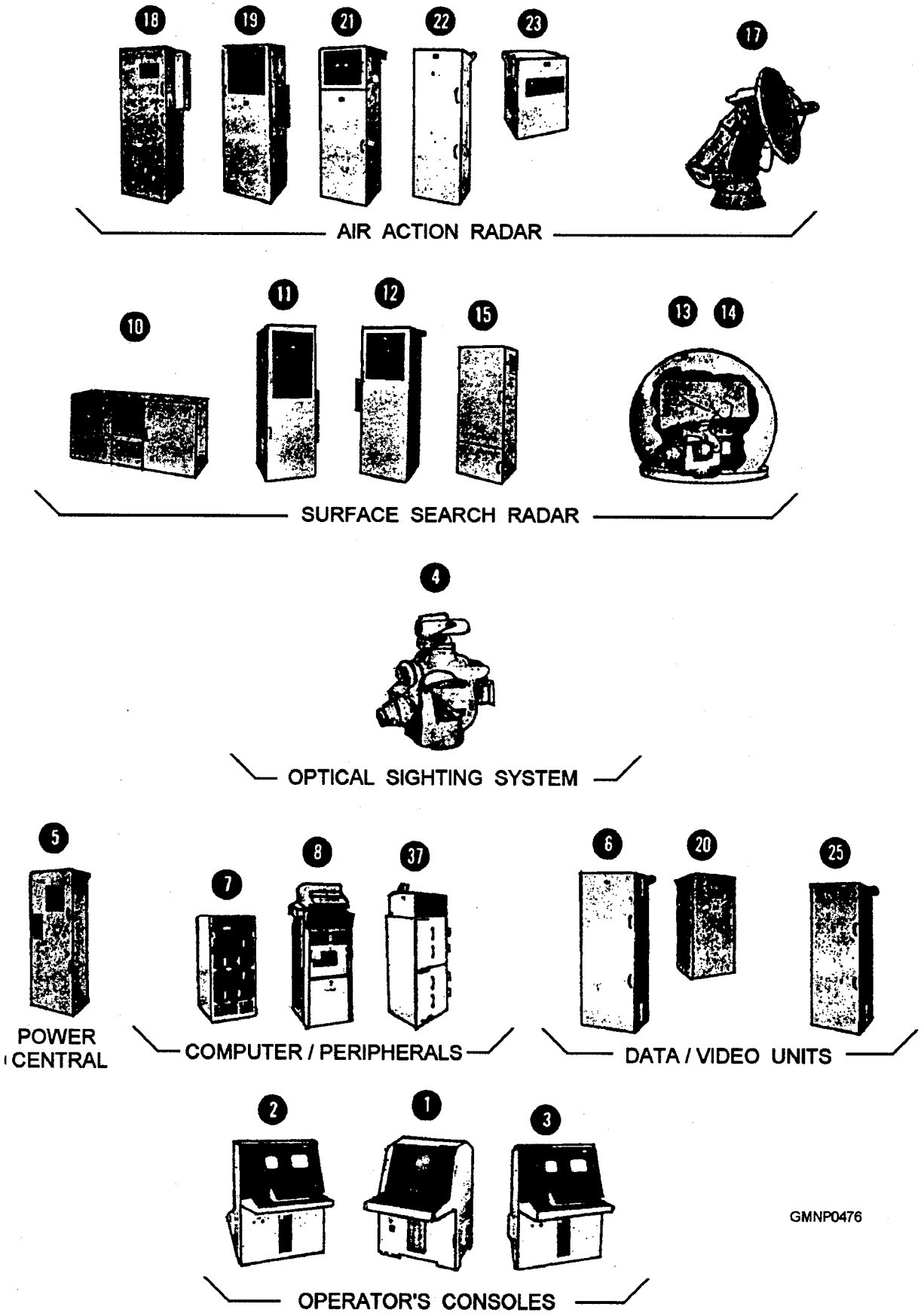

Figure 10-12.—Mk 86 Mod 10 FCS.

Operator Consoles

The operator consoles consist of the control officer console Mk 67 (COC, unit 1) and two Mk 113 weapons control consoles (WCC1 and WCC2, units 2 and 3). The COC and WCCs are the principal command positions for the Mk 86 FCS.

The COC allows the control officer to control and monitor overall operation of the FCS. From this position he initiates radar tracking of targets and assigns weapons to the WCCs.

An operator may control one or both guns from either WCC, depending on the weapon assignment made by the COC operator. The WCC operator enters tire control data into the computer through his keyboard and associated controls. This data includes ballistics data, ammunition selection, target data, grid coordinates, and spotting data. The WCC also has a TV monitor for visual surveillance and optical tracking.

Power Central

Power central (Mk 12, unit 5) is the central power control and distribution point for all units except the AN/SPG-60 radar set, the digital computer, and the digital input/output (I/O) console.

Computer/Peripherals

The systems computer/peripherals group consists of the AN/UYK-7 computer, the digital I/O console, and the magnetic tape recorder-reproducer. (These units are shown as units 7, 8, and 37, respectively, in fig. 10-12.)

DIGITAL COMPUTER AN/UYK-7.— The FCS uses the AN/UYK-7 general-purpose computer set. The program, once loaded into the computer memory, contains all instructions and constant data required to perform the computations and functions related to the fire control problem. The computer performs ballistic computations to determine the line-of-fire of the gun and the time-in-flight of the projectile from which gun orders are generated.

DIGITAL I/O CONSOLE.— The digital I/O console consists of a paper tape reader and perforator and a teletypewriter (keyboard/printer). The I/O console is primarily used for troubleshooting and for running system diagnostics.

MAGNETIC TAPE RECORDER-REPRODUCER.— The magnetic tape recorder-reproducer (MTRR) interfaces with the AN/UYK-7 computer to load the operational and maintenance programs for the system. The MTRR also records all system engagements for future review.

Surface Search Radar

The surface search radar consists of the AN/SPR-9A radar set that is comprised of units 10 through 15 (fig. 10-12).

Unit 10—Radar receiver

Unit 11—Frequency converter

Unit 12—Transmitter

Unit 13—Antenna

Unit 14—Radome

Unit 15—Control amplifier

The AN/SPQ-9A is the prime sensor of surface targets for the Mk 86 FCS. The radar is also equipped with circuitry for the reception and interrogation of a radar beacon (described later).

Air Action Radar

The air action radar consists of the AN/SPG-60 radar set and the tracking radar of the system that provides the director/radar inputs to the computer. The system is comprised of units 17 through 19 and 21 through 23 (fig. 10-12).

Unit 17—Antenna

Unit 18—Radar receiver

Unit 19—Radar transmitter

Unit 21—Antenna control

Unit 22—Signal data converter

Unit 23—Power distribution control

The antenna is mounted with a TV sight that allows the WCC operator to track targets visually. The same antenna is used in variations that supply CWI with the addition of a waveguide and feedhorn for CWI transmission.

Data/Video Units

The data/video units consist of a signal data translator (unit 6), a signal data converter (unit 20), and a video processor (unit 25). The signal data translator interfaces the computer with other units of the Mk 86 FCS. The signal data converter converts gun position synchro signals for use by the signal data translator. The video processor operates in conjunction with the computer system to acquire, track, and develop position and rate data for targets detected by the AN/SPQ-9A radar set. The video processor receives raw data from

the radar and correlates it with present and previous radar echoes to provide a high-detection probability and low incidence of false alarms.

Optical Sighting System

The optical sighting system (unit 4) consists of a gimbal-mounted TV camera (separate from the one mounted to the AN/SPG-60 antenna). The sight permits the WCC operator to monitor and track targets visually. The sight can be positioned automatically by the computer or manually by the WCC operator.

MK 92 FIRE CONTROL SYSTEM

The Mk 92 fire control system (FCS) is installed primarily on FFG-7 class ships. The system, in conjunction with the Mk 13 Mod 4 GMLS and the 76-mm Mk 75 gun, is capable of simultaneously detecting, tracking, and engaging multiple air and surface targets. Much of the terminology and some of the components, associated with the Mk 92 FCS, are similar or identical to those used in the Mk 86 FCS. Both systems, for instance, use the AN/UYK-7 general-purpose computer set to perform all the fire control calculations. Watch for other similarities as we describe the functions of the major components of this system. The system consists of the following major components:

- Combination antenna system (CAS) and radar
- Separate track and illuminating radar (STIR)
- Weapons control processor (WCP)
- Data exchange auxiliary console (DEAC)
- Planned position indicator (PPI) display console

Combined Antenna System

The combined antenna system (CAS) consists of search and track antennas mounted on a stabilized platform and enclosed in a radome (fig. 10-13). The search antenna provides air and surface surveillance but can also be used to track a limited number of targets while scanning. The search antenna is also equipped with IFF for target interrogation.

The CAS track antenna is primarily used for three-dimensional (three-coordinate) tracking of air targets. The antenna is also equipped with a continuous wave illumination (CWI) horn to provide target illumination for the guidance of Standard semiactive missiles.

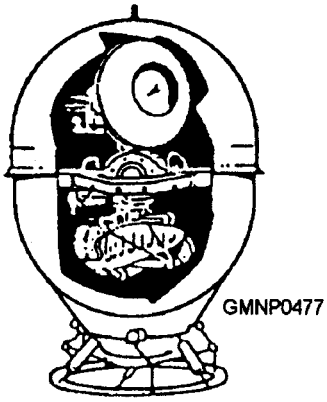

Figure 10-13.—The combination antenna.

Both antennas are part of the same radar unit. Both are controlled and operated from the CAS weapon control console (WCC). The CAS WCC is a two-operator console. One operator is responsible for the acquisition, the tracking, and the engagement of air targets by gun or missile. The second operator is responsible for the tracking and engagement of surface targets. The console is interfaced with the weapons control processor (WCP). In the normal mode of operation, the WCP designates targets for engagement by the CAS operators.

Separate Track and Illuminating Radar

The separate track and illuminating radar (STIR) (fig. 10-14) provides the system with a longer range tracking capability than is possible with the CAS. The STIR is solely a tracking radar with no search capability. The antenna is equipped with CWI for the control of Standard missiles. The STIR is a separate radar from CAS.

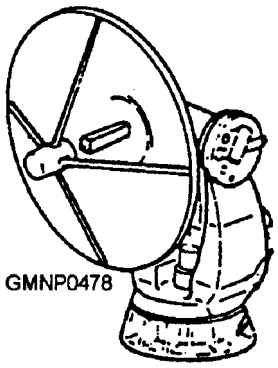

STIR DIRECTOR ANTENNA

Figure 10-14.—The STIR director antenna.

The STIR WCC is a single-operator console. It is identical to the CAS WCC except that the search radar controls have been eliminated. The operator is responsible for the acquisition, the tracking, and the engagement of targets by gun or missile, as ordered by the WCP.

Weapons Control Processor

The Mk 92 FCS uses the AN/UYK-7 computer set to perform all fire control calculations and threat evaluations. The WCP is the source of gun mount and missile launcher position orders and missile programming.

Data Exchange Auxiliary Console

The data exchange auxiliary console (DEAC) provides a variety of input and output capabilities for the WCP. The DEAC provides a keyboard and page printer, a paper tape reader and punch, a magnetic tape recorder/reproducer, and an output teletype communications interface. The DEAC is capable of accepting from either the WCP or the weapons support processor (WSP). (The WSP is another AN/UYK-7 computer that is part of the WDS.) The DEAC can exchange data with either the WCP or the WSP.

Planned Position Indicator Display Console

The planned position indicator (PPI) console, AN/UYA-4, serves as the weapons control officer (WCO) console. It displays selected radar and track data received from external search radars and the CAS search radar. The console may also be used, in the casualty mode, to enter track data into the WCP.

Figure 10-15 shows the equipment layout aboard an FFG-7 class ship.

WEAPONS SYSTEM MAINTENANCE

LEARNING OBJECTIVE: Recall the general requirements and procedures for weapons system maintenance and testing.

In today's SMS fleet, the' name of the game is readiness. Is the weapons system ready IN ALL RESPECTS to engage a target successfully? To achieve the optimum state of readiness, the weapons system must be maintained and tested.

At the equipment level, the gear (i.e., GMLS, computer, radar set, etc.) must be lubricated, aligned, and checked. This routine maintenance ensures individual accuracy and reliability. These general

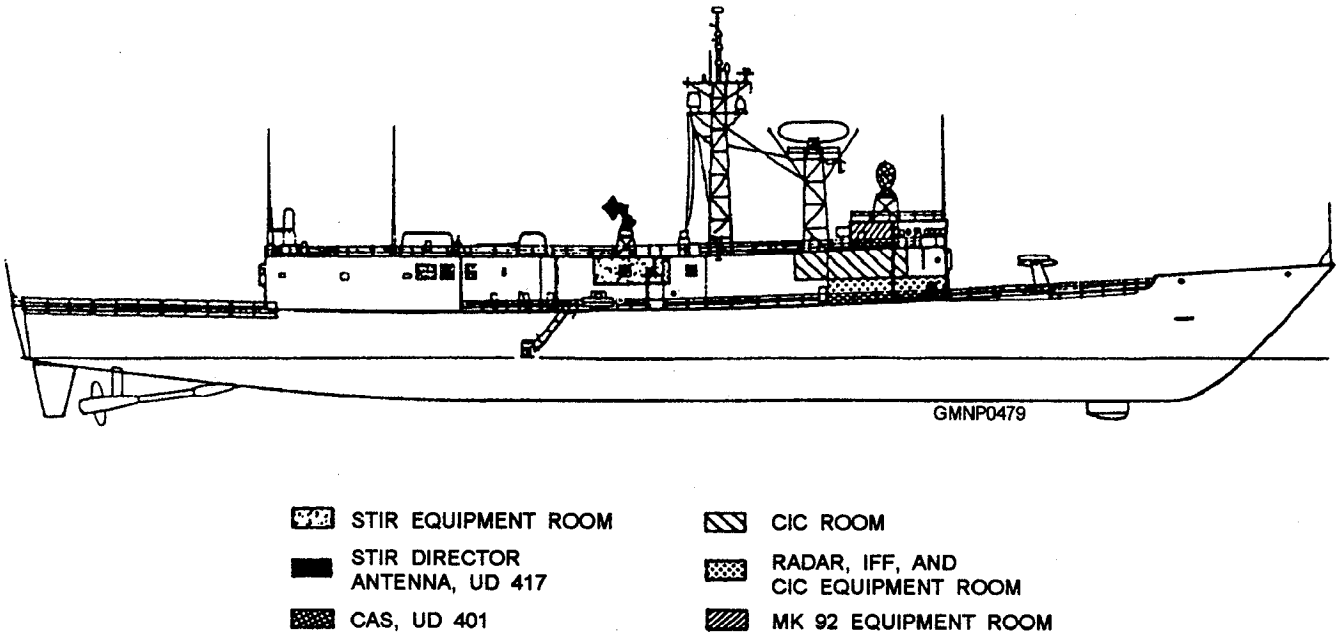

Figure 10-15.—Mk 92 FCS equipment configuration on FFG-7 class ship.

maintenance tasks are performed by the technicians assigned to the various work centers. (Chapter 12 discusses general maintenance in greater detail.)

At the system level, maintenance actions are concerned with alignment and electrical operability testing. The maintenance responsibility shifts to all personnel assigned to the missile division. In short, a team effort is required. Normally, the missile Fire Controlmen assume the lead in system maintenance actions. However, Gunner's Mates are equally involved.

SYSTEM TESTING

To determine the readiness of the missile weapons system, a series of tests has been developed under the SMS program. These tests are known as system maintenance tests (SMTs). They are used to evaluate the ability of a weapons system to perform effectively. If SMTs uncover a problem, corrective action is required. Quite often troubleshooting must start at the system level. It then works its way down to the individual piece of equipment at fault.

SMTs, in conjunction with separate equipment level tests, provide a thorough check of the entire weapons system. The tests are designed (for the most part) not to overlap each other. In other words, a particular equipment level check is not rechecked by an SMT. Also, SMTs are scheduled at the minimumfrequency or period necessary to ensure reliability.

Since system testing is a form of maintenance, SMTs come under the Navy's planned maintenance system (PMS). Hence SMT scheduling and format are identical to equipment-level maintenance actions. Each SMT is letter-number coded according to its required time interval. The letter *D* stands for daily check, *W* for weekly, *M* for monthly, and so forth.

For certain weapons systems, weekly tests are designed to check different equipment combinations, setups, and modes of operation. This concept requires that these weekly tests be scheduled over a 6-day period, Monday through Saturday. Quite often there will be 12 different weekly tests, identified W-1 through W-12. Depending on how a ship sets up its maintenance schedule, W-1 and W-7 would be held on Monday. On Tuesday, you run W-2 and W-8; Wednesday it's W-3 and W-9; and so forth. In this concept, each GMFCS and guide arm (on dual-arm launchers) is exercised daily with a different problem.

Testing Requirements

A typical missile system test program normally includes (but is not limited to) the items listed below:

- Daily system operability test (DSOT)
- Search radar readiness
- Supplemental (auxiliary) firing readiness
- Casualty mode operation
- Ship parameters (gyro inputs)
- Radar collimation/correlation
- ECCM capabilities
- Fire control radar parameters
- Live target tracking (AAW)
- Balloon tracking (designation accuracy)
- Surface target tracking

Overall system testing is centered around the daily system operability y test (DSOT), (Actually, a DSOT is one of the 12 weekly scheduled checks, W-1 through W-12, mentioned earlier.) The DSOT is designed to exercise almost all of the functional circuits related to the primary mode of system operation. The DSOT is very important and we'11 examine it in detail shortly.

Other system tests check the areas of the system not covered by DSOT. For example, weapons systems have different modes of operation. Antiair warfare (AAW) is the normal mode, usually. Antiship missile defense (ASMD), surface warfare (SUW), antisubmarine warfare (ASW), and shore modes are optional. There may also be a casualty mode to permit system operation should certain equipments be inoperable. Each mode is tested to ensure its continued reliability. The periodicities of these tests are usually greater, such as monthly, quarterly, or longer.

SMTs check the equipment in two major areas—alignment requirements and electrical operability requirements. Alignment requirements consist of in-space RF alignments and internal (shipboard) alignments. In-space RF alignments verify that RF beams from the search, fire control, and guidance radars all coincide. This coinciding action is very important. Assume a search radar is tracking a target at 180° true bearing. Also assume a fire control radar beam is 10° out of alignment with the search radar. At designation, the fire control radar is searching empty space, 10° off target. Acquisition could be impossible.

Internal or shipboard alignments are mechanical and electrical in nature. They affect individual equipments and the interactions between different equipments. For example, consider a GMLS power drive system with its synchros and receiver-regulators. Synchronization will never be achieved with misalignments between the computer and the GMLS.

Alignment procedures are provided to correct any in-space RF or internal misalignments. However, they are only performed on an as-needed basis, when discovered by faulty test results.

The quality of system test results can be determined by system responses and parameter tolerances. (Parameter-any set of values that determines the normal or desired characteristics and behavior of something.) Test result data may be obtained from indicators, lamps, dials, meters, and computer readouts (printouts). Analyzing the data provides the technicians with a" yardstick for measuring the success or failure of a particular test.

Testing Procedures

System test procedures are printed on standard maintenance requirement cards (MRCs). Each system test MRC contains the same information as found on any other equipment MRC. Ships' 3-M Manual, Volume I, OPNAVINST 4790.4, explains MRCs in detail.

The actual test procedure is presented in an easy-to-read step-by-step format. Figure 10-16 shows a sample system test MRC page. Note that the information is listed in four columns:

1. Step—a number to indicate the phase or point in the test sequence.

2. Equipment—the equipment of a station/work center that performs the step.

3. Procedure—what action must be accomplished.

4. Response—the "desired" response or result from a particular step.

Also note that pertinent safety warnings and operational notes (special instructions) precede important steps.

Since a system test normally requires the participation of many individual stations/work centers, coordination is a must. DSOT, for example, can include four or five different stations. Each station will have its own copy of the MRC of the test. That way, all involved personnel can follow along with each step as it occurs.

Test procedures are arranged so one individual serves as the test conductor/coordinator. The test conductor controls and directs the performance of the test (keeps it going). Normally, this individual is located at the WDE, but that varies among ships. The test conductor can also call out each step number and record any response data.

Refer to figure 10-16, step 49. The test conductor calls out "Step 49." You, the EP2 panel operator, must observe the reaction of the ALERT indicator lamp and buzzer of the GMLSs. Knowing how your system operates, you realize the lamp should flash and the buzzer buzz when they are activated. (Step 48 activates them.) If they work properly, you report over the sound-powered phone circuit, "Step 49, flashing and buzzing." The test conductor acknowledges your verbal response and the test goes on. This procedure may vary from ship to ship, but the idea is the same.

Test Evaluation and Fault Isolation

Each system test is divided into independent phases where possible. This division helps in conducting the test and is a fault isolation aid. Particular parts of the system may be checked without conducting an entire test.

Selected parameters under test are sampled or measured to specified tolerances. These tolerances, along with the desired responses, are listed on the MRC following the applicable steps. Step 40 on figure 10-16 shows parameters and tolerances.

Fault isolation directories are located in each MRC and keyed to corresponding test steps

PROCEDURE (Contd)

STEP	EQUIPMENT	PROCEDURE	RESPONSE
40 (Cont.)		b. RANGE RATE	0 yd/sec (10 to -10 yd/sec)
		c. ELEVATION	0° (1° to -1°)
		d. BEARING	0° (359° to 001°)

NOTE 14: Do not perform steps 41 thru 59 when test is repeated on other MR channel.

41	LSM	Depress MSL MODE SEL ITR (SMIA (SM1) switch.	Depressed
42	EP2	Depress MISSILE TYPE SYSTEM ASSIGNMENT X (Y) (Z) switch.	Depressed
43	CWI HVPS	Observe IT COMMAND (SMIA COMMAND) (SM1 COMMAND) indicator lamp.	Lit
44	CWI XMTR	Position MISSILE MODE switch to IT (SM).	Position
45	LSM	Observe MR ( ) MSL MODE ITR (SM1A) (SM1) indicator lamp.	Lit

WARNING: Safety observer ensure launcher area is clear.

46	Safety observer	Ensure launcher area is clear and close safety switch.	Clear
47	LSM	Observe LS STANDBY indicator lamp.	Lit
48	LSM	Depress LS ALERT switch.	Depressed
49	EP2	Observe ALERT indicator lamp and buzzer.	Flashing, buzzing
50	EP2	Position READY SWITCH SMS3 to READY.	READY
51	LSM	Observe LS READY indicator lamp.	Lit

WARNING: Only TSAM will be loaded on rail.

52	LSM	Depress LOAD ORDER CONT switch.	Depressed
53	LSM	(ITR only) Simultaneously start stopwatch and depress WARMUP ON switch to light WARMUP ON indicator lamp.	Depressed

PAGE 9 OF 21

CYDU

N

MAINTENANCE REQUIREMENT CARD (MRC)
OPNAV 4700-1 ( ) (Rev.)

GMNP0480

Figure10-16.—Sample system test MRC page.

(fig. 10-17). If an out-of-tolerance condition or incorrect response is observed, the fault isolation direction should be consulted. It lists system and equipment OPs that can be referenced to aid in troubleshooting.

Ideally, the test should be completed without pause for fault isolation. Completing the test permits a more accurate evaluation of the fault. It also results in the most efficient use of manpower.

A significant feature of a GMFCS is its general-purpose digital computer. In addition to solving the tactical fire control problem, the computer is also a test instrument. Digital test programs have been designed to enhance system testing.

PROCEDURE (Contd)

STEP	FAULT ISOLATION PROCEDURE	SFD REFERENCE
1	Para. 10-2.3	Fig. 11-4.4,2
2	Para. 10-2.4	Fig. 11-4.4,5
25	Para. 10-2.5	Fig. 11-4.6,4
26	Para. 10-2.6	Fig. 11-4.4,8
27a	Para. 10-2.7	Fig. 11-4.8,14
27b	Para. 10-2.7	Fig. 11-4.8,14
27c	Para. 10-2.7	Fig. 11-4.8,14
27d	Para. 10-2.7	Fig. 11-4.8,14
28	Para. 10-2.8	Fig. 11-4.4,5 Fig. 11-4.6,9
29	Para. 10-2.9	Fig. 11-4.6,9
30	Para. 10-2.9	Fig. 11-4.13,10
32	Para. 102.10	Fig. 11-4.6,12
33	Para. 10-2.11 Para. 10-2.12	Fig. 11-4.9,5
40a	Para. 10-2.13	Fig. 11-4.8,14
40b	Para. 10-2.13	Fig. 11-4.8,14
40c	Para. 10-2.13	Fig. 11-4.8,14
40d	Para. 10-2.13	Fig. 11-4.8,14
43	---	Fig. 11-4.12,3
45	Para. 10-2.14	Fig. 11-4.12,5
47	---	Fig. 11-4.15,6
49	---	Fig. 11-4.15,2
51	---	Fig. 11-4.15,6
54	OP 2665 Vol 3	Fig. 11-4.15,4
57	OP 2655, Vol 3	Fig. 11-4.15,4
59	---	Fig. 11-4.15,2

PAGE 16 OF 21

CYDU

N

MAINTENANCE REQUIREMENT CARD (MRC)
OPNAV 4700-1 ( ) (Rev.)

GMNP0481

Figure10-17.—Sample test fault directory.

Dynamic digital tests are controlled by the computer complex of the GMFCSs or the computer complex of the NTDS/WDSs. The computer stores special test programs and generates a variety of dynamic target problems. The test program solves the fire control problem to arrive at ideal values. These values are then compared with actual test responses to provide error monitoring. Teletypewriters can be used to print out this information for evaluation.

A new concept in digital system testing uses the computer to isolate a fault. This testing can be performed during or separate from normal computer operations. The advantages are obvious—quicker repair times and increased readiness.

DAILY SYSTEM OPERABILITY TEST

The purpose of DSOT is to assess missile system readiness in its normal mode of operation. For most systems, this would be the AAW mode, although the specific functions tested may vary between systems. DSOT usually involves testing target detection and/or designation, acquisition, tracking, and missile firing. A typical DSOT is described in the following paragraphs. Figure 10-18 is a simplified block diagram of DSOT data flow.

Preliminary Setup

Before the test sequence is started, each equipment station prepares for operation. Technicians follow a list of instructions provided at the beginning of the MRC test procedure. Most setups involve equipment turn-on actions and switch positioning. In some cases, the test conductor announces a particular equipment configuration.

Detection

In systems that test this function, a synthetic (artificial or man-made) target video is inserted in the 3-D search radar. The target is at a predetermined range, bearing, and elevation. These data are routed through normal distribution circuits. The target video is checked at the NTDS/WDS or WDS consoles. The test target is then entered into a WDS tracking circuit.

GMFCS Assignment

If the detection function is not tested, the NTDS/WDS or WDS operator initiates the test target at the TSTC. A GMFCS is assigned to one of the tracking channels. The accuracy of the designated position is checked at the radar set console. Position repeat back data are checked at the NTDS/WDS or WDS consoles.

Acquisition and Static Track

A test RF generator provides the fire control radar with a simulated target return signal. Radar jamming signals may also be provided. The scope display of the radar is monitored to see how well the radar can acquire the target. How much of the radar receiver is tested is determined by where the test signal is introduced. The test signal contains information needed for radar tracking, including angle, error, and range. Target

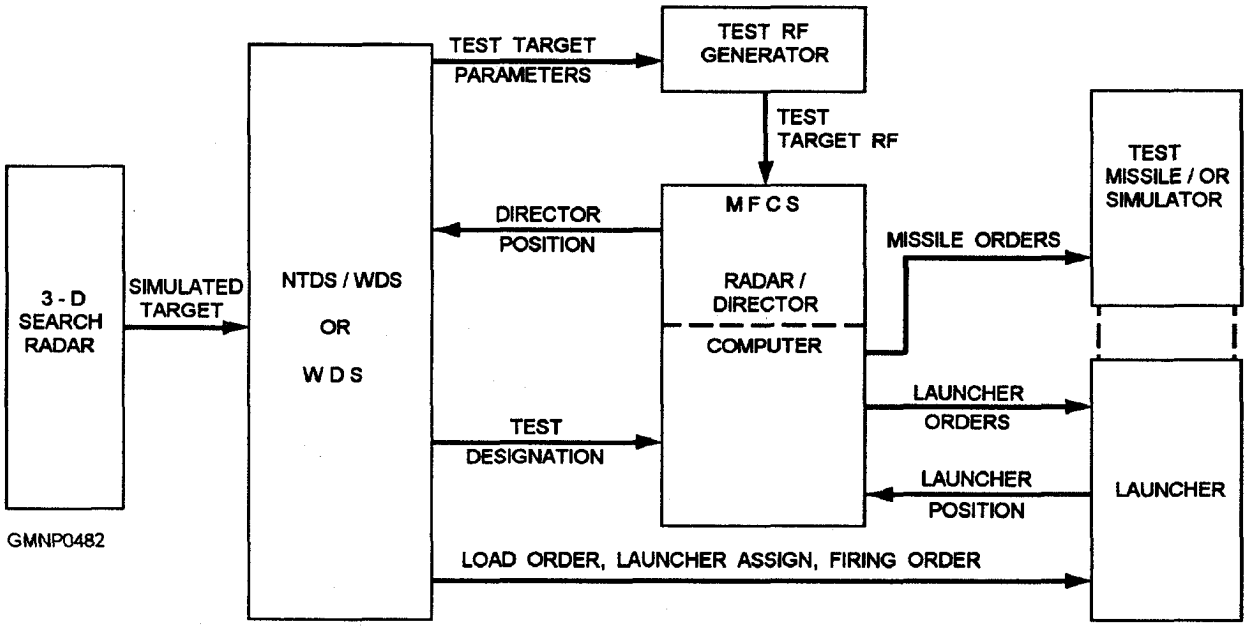

Figure 10-18.—Simplified DSOT data flow.

parameters are usually controlled by a test program, as previously mentioned. Control is also possible from an analog test set.

Launcher Loading and Missile Selection

After track is attained, the launcher goes through a loading sequence to place a training missile on the rail. SAFETY REMINDER: VERIFY THAT ONLY A TEST MISSILE HAS BEEN LOADED. Otherwise, the DSOT would result in the actual launching of a live missile. (Don't laugh, it HAS happened!)

Missile type and mode selection might also be tested at this time. The simulator of the test missile provides these functions.

Dynamic Evaluation

During this phase of DSOT, two aspects of system operation are tested. The first is the FCS tracking of a dynamic target. The second is launcher assignment and synchronization to a computer-ordered position.

Target parameters are selected that simulate an incoming enemy aircraft. The fire control system is monitored to ensure smooth and accurate tracking. The launcher is assigned and the fire control problem solution verified by monitoring launcher and missile orders.

Engageability displays are observed at the weapons control area. Displays indicate when the target is within firing range and the launcher is in a clear firing bearing. If all conditions are correct, the firing circuit is closed (ITL). A proper firing indication is monitored at the launcher station and is verified at various weapons stations.

The launcher operator must initiate a missile-in-flight condition. That is usually done by depressing a switch button which simulates the launcher rail is clear/empty. In effect, we electrically "lie" to the system, but it is necessary to continue the test.

Test Missile Readouts

Certain signals are essential to missile operation but may not be automatically y checked. Visual observations, by means of built-in lamps and dials, are made at the simulator of the test missile. Signals, such as missile orders, are sometimes checked with a multimeter. A serious safety hazard exists when you are making measurements or otherwise approaching the missile while it is on the launcher. ALWAYS ENSURE THAT ALL LAUNCHER MOTORS ARE STOPPED BEFORE APPROACHING THE MISSILE.

After missile readouts are finished, all stations are secured or setup for the next test.

OCSOT

Another test you may be involved with is the overall combat system operability test (OCSOT). The OCSOT provides a tool to make rapid assessments of ship readiness. It tests the entire combat system as an integrated system. An OCSOT uses normal equipment, software, and interfaces during both simulated and controlled live target phases. As a rule, the following systems are tested:

- Guided missile fire control
- Gun fire control
- Antisubmarine warfare
- Electronic warfare
- Tactical data
- Identification friend or foe (IFF)
- Search radars
- Electronic navigation

The OCSOT has specified parameters, such as range, bearing, and elevation tolerances, for all phases. Proper reaction times for systems and operators are also monitored. As an added benefit, the OCSOT results in training for improvement of operational readiness in a combat environment.

TRAINING MISSILES

LEARNING OBJECTIVE: Recall the general purposes of and the maintenance requirements for the Guided Missile Training Round (GMTR).

A training missile is an integral part of every missile weapons system. A training missile consists of two major subassemblies—a training round and a guided missile simulator. The training round is an inert shape or body that resembles a tactical missile shape. The guided missile simulator is an electronic unit or module

that simulates the electrical performance of a tactical missile.

In the SMS community, the primary training missiles are the guided missile training round (GMTR) (pronounced gim-ter) used by the Mk 13 and 26 GMLSs.

Other training rounds and missiles do exist. Examples include the ASROC training round and the (relatively new) training antisubmarine warfare missile (TASWM). Although these items are special-purpose equipments, fictionally they are similar to GMTRs. This discussion will be limited to the GMTRs.

GENERAL PURPOSES

Training missiles are electrically and mechanically compatible to their launching and fire control systems. Training missiles are also capable of simulating the performance of any tactical missile handled by a particular weapons system.

GMTRs are carried by combatant ships for two purposes-training and testing. GMTRs are used to train personnel in magazine loading, launcher operation, missile firing, and missile handling evolutions. The GMTR is also used during DSOT and as an aid in other system testing/equipment maintenance actions. The training and testing functions are really inseparable operations and greatly contribute to overall system readiness.

Training missiles may also be used as display shapes. As your ship enters/leaves port, the GMTRs will be loaded to the launcher. The same thing applies for public/VIP tour demonstrations. This policy may vary among commands, but it is the general rule.

GMTRs are mandatory items in a magazine loadout. Single-arm GMLSs will carry one training missile; dual-arm launchers will carry two training missiles. Although these missiles are inert rounds (contain no explosive materials), they should always be treated as real tactical weapons.

STANDARD GMTR

The current version of the GMTR is designated the Mk60 Mod 6, 7. It is capable of simulating ITR, SM-1A (MR), SM-1 (MR), SM-2 (MR), Standard ARM, and Harpoon missiles. Externally, the GMTR is similar to a tactical SSSM round. Although the sections and markings are not the same, the GMTR adequately serves for all general handling and display purposes.

The Mk 60 Mod 6, 7 GMTR is made up of two major subassemblies:

1. Mk 59 Mod 3 guided missile dummy round (GMDR)
2. Mk 63 Mod 5, 6 guided missile simulator (GMS)

The GMDR (fig. 10-19) forms the body of the GMTR. It consists of ballasted dummy sections and is painted blue. Tail control surfaces and dorsal fins are painted white. The Mk 63 Mod 5, 6 GMS is located in a compartment of the dummy rocket motor section. A removable door protects the simulator from the outside elements. The door has a clear plastic window to permit visual observation of switch positions and lamp displays.

A target acquisition console (TAC) source and emitter are mounted in the adapter section of the GMDR. These units are used in testing Standard ARM missile features. The dummy rocket motor igniter assembly is mounted in the forward part of the dummy

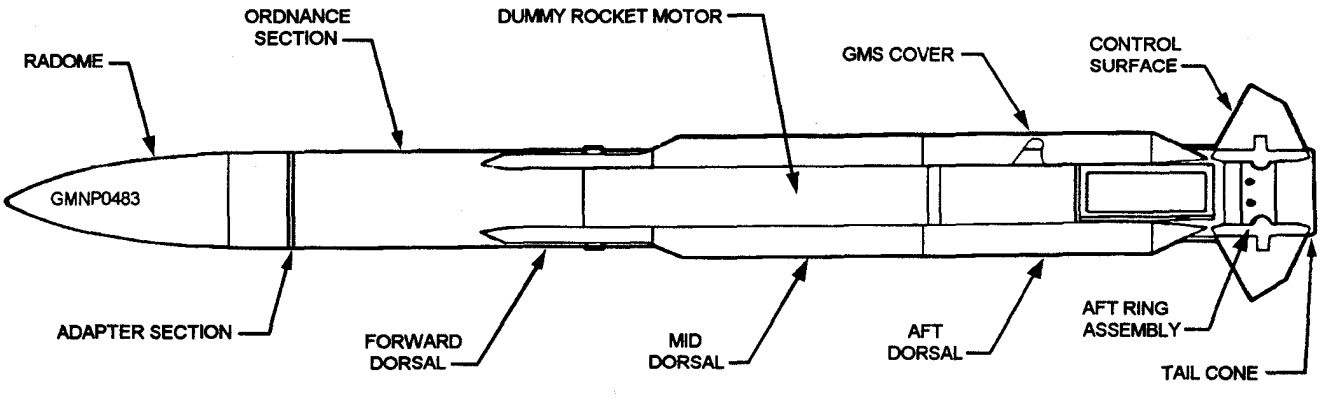

Figure 10-19.—Mk 60 Mod 6, 7 GMTR for Standard missile systems.

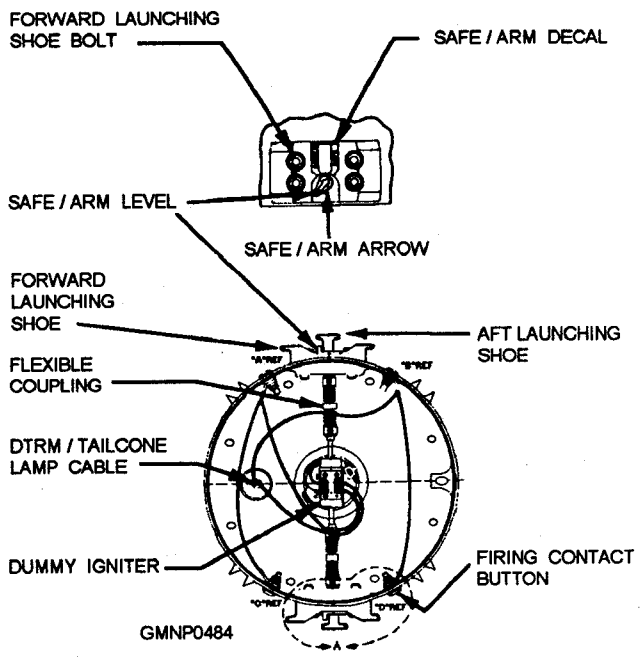

Figure 10-20.—GMTR dummy igniter and S&A lever.

DTRM (fig. 10-20). Four firing contact buttons and the S&A (SAFE/ARM) levers are also located here.

The tail cone assembly of the GMDR includes two external electrical connectors (fig. 10-21). The six-pin missile-to-magazine connector provides for round identification and application of warmup power (if applicable). The missile-to-launcher connector (MLC) provides a 23-pin jack receptacle for application of preflight missile orders and simulator power. The MLC is easily removed/replaced and protected by a rubber composition pad.

The tail cone assembly houses a large red light bulb called the tail cone lamp. When a firing circuit is completed, the lamp lights to simulate rocket motor ignition. The aft end of the tail cone is sealed with a clear plastic window. The tail cone lamp is easily observed through this window. Figure 10-21 also illustrates how a GMS is installed and connected (electrical cables) to the GMDR.

The Mk 63 Mod 5, 6 GMS is a very versatile electronic unit. Figure 10-22 shows the front panel of the simulator. The GMS furnishes the electrical loads, voltages, frequencies, and responses for any of the six missile types mentioned earlier. Around identification switch (item 1 in the figure) selects the correct circuits

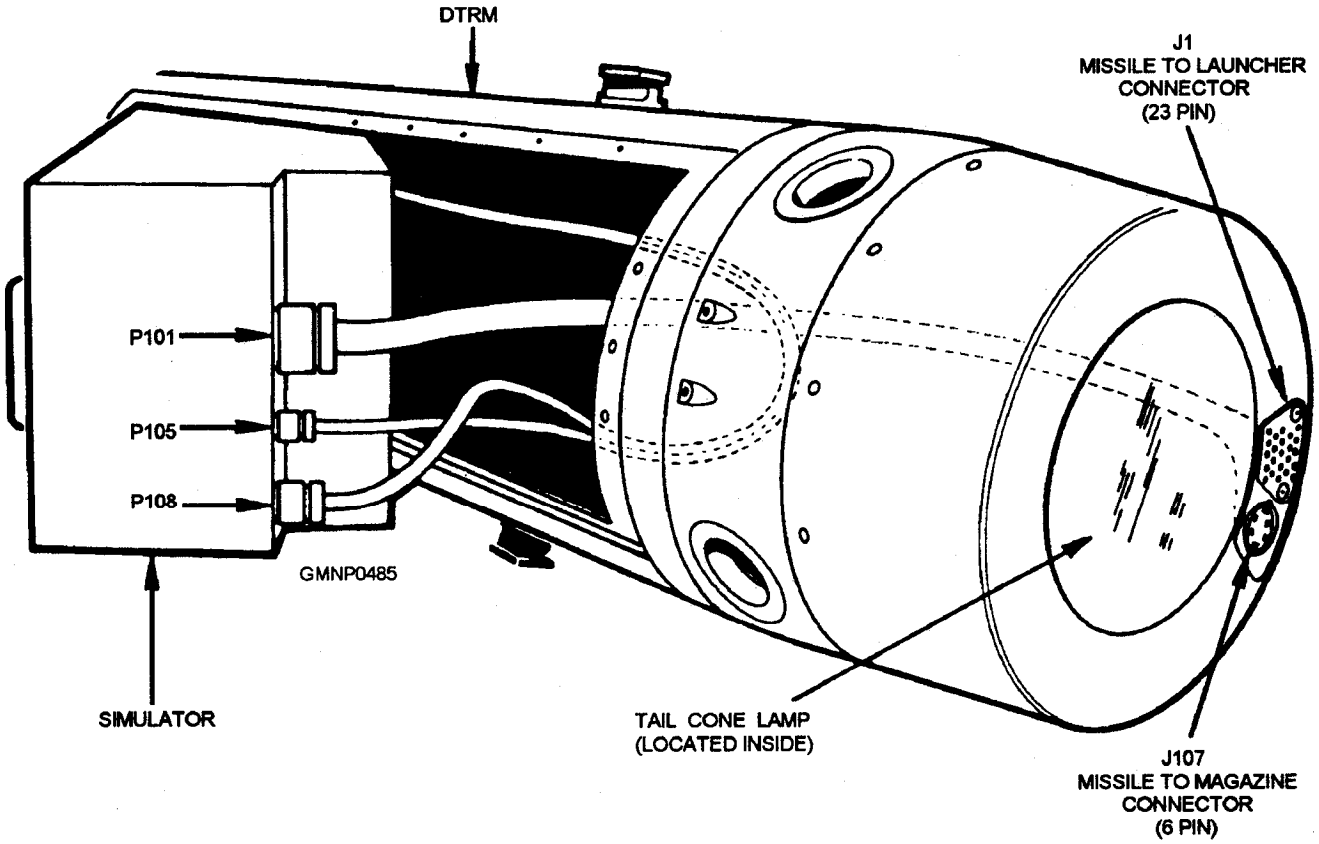

Figure 10-21.—Tail cone assembly components and simulator removal.

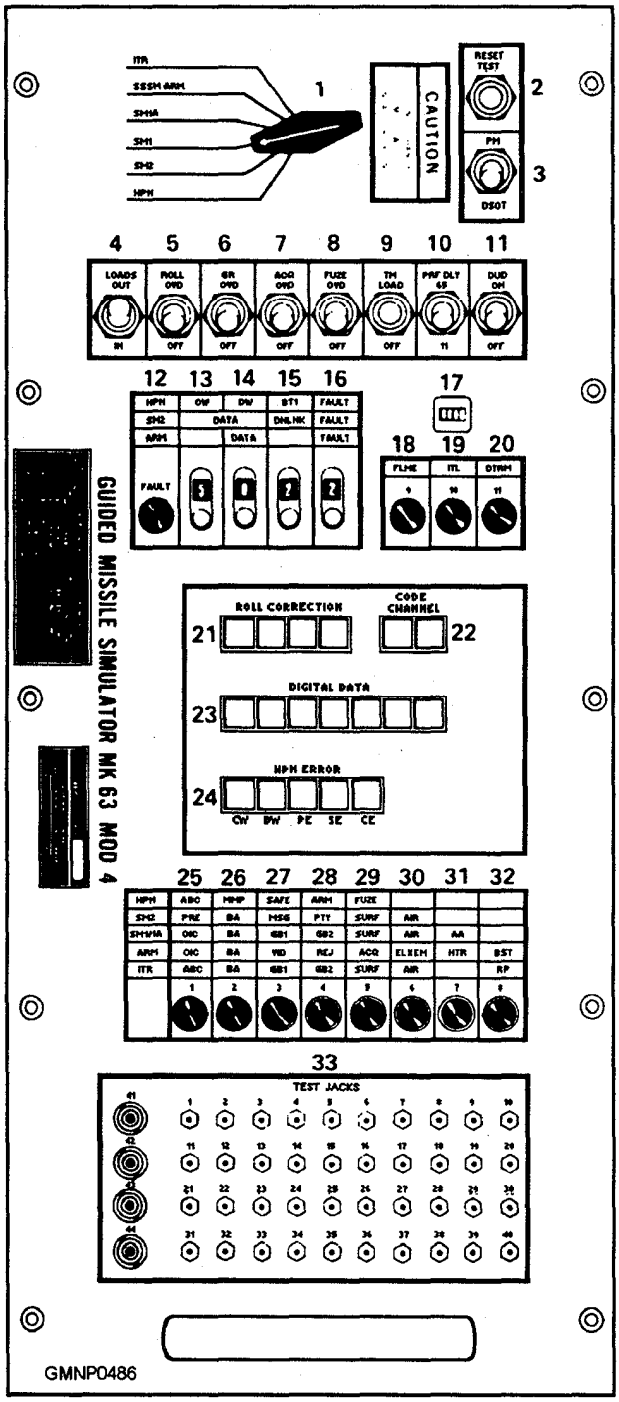

Figure 10-22.—Mk 63 Mod 5, 6 front panel of the guided missile simulator.

for simulation of the desired missile type. Lamps, switches, displays, and test jacks on the front panel facilitate DSOT and other system testing.

Most of the major simulator circuits are designed to function independently. They also have associated indicators to display readouts of their operations. The roll corrector circuit includes an LED display (item 21 in the figure) for direct reading in degrees of roll. Visual readout of the selected missile cede or channel number (item 22 in the figure) is also displayed on an LED readout.

TRAINING MISSILE MAINTENANCE

The importance of maintaining all training missiles in peak condition cannot be stressed enough. If these devices are allowed to deteriorate, the operational readiness of the entire weapons system is in jeopardy. Gunner's Mates are responsible for the proper maintenance and care of the GMTRs. A majority of these maintenance actions come under the headings of inspecting and servicing.

Maintenance requirement cards (MRCs) provide the guidance necessary to maintain the training missiles. The MRCs describe the required periodic and unscheduled maintenance actions applicable to the round. In case of fictional problems or equipment failure, be sure to consult these MRCs.

Inspections

Inspections include the preventive maintenance procedures required to detect problem areas before they cause equipment failures. Listed below are a few examples of what to look for during a training missile inspection.

1. Examine all painted surfaces for chipping and scratches.

2. Inspect tail control surfaces for hard or rough movement as they are folded/unfolded.

3. Inspect the S&A levers/arming tool socket. Ensure they are in the SAFE position and they offer some tension or resistance to being turned. Also inspect the firing contact buttons or points for wear and cleanliness.

4. Examine all plastic covers/windows for cracks and chips.

5. Examine the front panel items of the simulator. Check for damaged lamp lenses, broken or loose switches, and so forth.

6. Inspect the launching shoes for excessive or uneven wear by using a micrometer or special GO/NO-GO gage tool. Consult the applicable training missile OP or MRC for maximum/minimum wear tolerances.

If possible, correct any deficiencies noted at the time of inspection. If an immediate repair cannot be made, report the problem to proper authority.

Servicing

Servicing a training missile prevents corrosion and deterioration of the round. While in stowage, training missiles require no external care other than routine cleaning. Gross accumulations of oil, grease, and dirt must not be permitted to remain on the surface of the round. If you are cleaning the sockets, apply the compound liberally to the socket area. Then carefully clean the socket with an LP air supply. Reapply the compound but do not wipe it dry. This point applies to any application of corrosion-preventive compound. If you wipe it dry, you wipe away the effectiveness of the compound

Training missiles are NOT sealed, watertight devices. Excessive exposure to moisture not only affects the external surfaces of the missile but can cause serious internal damage. This problem is particularly acute in the area of the simulator. Remember, a simulator is a very sensitive electronic test instrument.

Training missiles will corrode—that's a fact of life. Therefore, an effective maintenance program is mandatory. Also, DO NOT LET THE GMTR GET WET. If it begins to rain, immediately unload the round to the magazine. If taking this action means interrupting a DSOT, so be it. The DSOT can be setup and rerun in a matter of minutes after the storm passes. It may take you days to thoroughly dry a "soaked training missile and its simulator. In the long run, it is better to keep the round dry.

SUMMARY

In this chapter we covered the weapons system processes of detection and control. We described how raw data is gathered by the various types of sensors, then processed by the NTDS for use by the WDS. You saw how the WDS functions as an information gatherer and engagement controller. We then examined some of the compensations in the fire control problem required to deliver accurate fire. We then looked at the three most modern fire control systems currently in the fleet. Finally, we described system testing and the characteristics/uses of a guided missile training round (GMTR). Remember to refer to the within text references for more specific information about these subject areas.

CHAPTER 11

ALIGNMENT

For any weapon system to be effective, the destructive device must be delivered to the target accurately. Many air targets are now capable of speeds faster than sound; therefore, they must be detected and engaged at greater distances. Technological improvements in modern weapons systems require that equal improvements be made in their associated detection and fire control systems. Proper battery alignment is a must if ordnance is to be delivered on target.

In this chapter we will describe the basic fundamentals of alignment principles and battery alignment. We will also discuss firing cutout mechanisms, radar alignment, and the final alignment and test.

ALIGNMENT PRINCIPLES

LEARNING OBJECTIVES: Describe alignment principles and procedures on naval gun systems.

The elements of a modern combat system must work together with a great degree of accuracy to deliver ordnance on target. All are electrical y and/or mechanically linked to pass data from one unit to the next. Each equipment with alignable properties must be aligned to a common reference to ensure a correct exchange of data between the various systems. Data transmission and response synchros must be properly zeroed. All gun bores, missile launchers, fire control directors, radar antennas, gyrocompasses, and other similar pointing lines must be parallel (when no parallax or ballistic corrections have been made). Combat system alignment is the process of establishing parallelism, within acceptable tolerances, between the elements of the combat system.

In this section we will describe the sequence used in establishing combat system alignment. Following that, we will discuss the more familiar sequence of alignment verification.

SEQUENCE OF ALIGNMENT

Combat system alignment begins with the design of the ship. Alignment is established as the ship is constructed. Once constructed, alignment is continually perfected up to the point where the ship is placed in commission and its permanent operational crew is on board. As a ship goes through its normal life cycle, it is the job of the crew to verify this alignment continually, making corrections as necessary.

Certain steps in a combat system alignment process must be accomplished according to a specified sequence. The sequential steps are as follows:

1. Establishment of reference planes
2. Establishment of reference marks
3. Establishment of parallelism
4. Performance of fire control radar radio frequency (RF)—optical alignment
5. Performance of train and elevation alignment
6. Establishment of benchmark and tram reference readings
7. Performance of dynamic train alignment

Establishment of Reference Planes

The first major alignment step is the establishment of reference planes. A position can only be described by relating it to a known reference point. Reference planes allow combat system elements to be described as to how they are situated in relationship to each other. Reference planes are established during the initial construction of the ship and are used as required during alignment of the combat system. Reference planes consist of the center-line reference plane (CRP), the ship base plane (SBP), the master reference plane (MRP), and the weapons control reference plane (WCRP).

CENTER-LINE REFERENCE PLANE.— The center-line reference plane (CRP) is the first plane established. It is the plane containing the ship's center line and is perpendicular to the SBP. The CRP is the reference used to establish the train zero alignment of all of the combat system equipment.

SHIPBASE PLANE.— The shipbase plane (SBP), the basic plane of origin, is perpendicular to the CRP and includes the base line of the ship, but is not necessarily parallel to the keel.

MASTER REFERENCE PLANE.— The master reference plane (MRP) is a plane within the ship parallel to the SBP. On most ships, the MRP is represented by a master level plate that has been accurately leveled to the SBP and aligned in bearing to the CRP. The MRP is used as the machining reference to establish the foundations of the combat system equipment. After initial construction alignment, the MRP is only used as a reference plane following major damage or modernization.

WEAPON CONTROL REFERENCE PLANE.— The weapon control reference plane (WCRP) is established during initial construction and is usually represented by the roller path plane (RPP) or the equipment that has been designated the alignment reference. This is the plane, which most people are familiar with, that is involved with alignment verification. On the FFG-7 class ship, for example, the WCRP is the roller path of the Mk 75 gun mount.

Establishment of Reference Marks

The second major alignment step is the establishment of reference marks. Reference marks include center-line reference marks, offset center-line reference marks, and equipment bench marks.

CENTER-LINE REFERENCE MARKS.— Center-line reference marks are established during initial construction to represent the ship's center line. Several small plates (at least two forward and two aft) will be installed at intervals along the center line to indicate its location.

OFFSET CENTER-LINE REFERENCE MARKS.— Offset center-line reference marks are also established during initial construction to facilitate the combat system alignment. The offset center line is established parallel or perpendicular to the ship's center line. These marks are installed to prevent repeating the center-line survey during subsequent alignments. They must be maintained within 1 minute of arc of the CRP.

BENCH MARKS.— Bench marks are the most familiar of all the reference marks to the average equipment operator/maintenance person. A bench mark is installed for each equipment that has an alignment telescope. Bench marks are installed at any convenient location that is visible through the equipment telescope. Equipment bench marks are used throughout the life of the ship to verify alignment.

Establishment of Parallelism

The third major alignment step is the establishment of parallelism between the roller path planes (RPPs) of aIl the equipment in the combat system. This step is also accomplished during initial construction. It is accomplished again as new systems are added or old equipment is replaced. The steps necessary to achieve the required degree of parallelism are foundation machining, inclination verification, and interequipment leveling.

FOUNDATION MACHINING.— Before the combat system equipment is installed aboard ship, the equipment foundations are machined so that the planes of the foundations are parallel, within tolerance, to the reference plane and then smoothed to the required flatness.

When the equipment is mounted aboard ship, the RPPs will not be precisely parallel. It is not possible under normal conditions to attain perfect accuracy in machining or in the construction of equipment. There will always be some error. However, once machined within tolerance, there are devices incorporated into most equipment that can be adjusted to compensate for roller path alignment error. These devices are discussed later.

INCLINATION VERIFICATION.— Inclination verification consists of the measurement of the tilt between equipment RPPs of the equipment in the combat system and the reference plane. Figure 11-1 shows a plane tilted with respect to the reference plane. Note that the inclination varies with the bearing. In the direction of line OA, the inclination is zero. Inclination increases gradually in the direction of line OB until it reaches maximum positive angle at 90° from line OA. Point B is the bearing of the high point (Bhp). Point D is a negative angle, proportionate to the positive angle of point B. All the references to roller path alignment are expressed in terms of the bearing and inclination of the high point. The tilt of the RPP is determined by using clinometers or similar devices.

INTEREQUIPMENT LEVELING.— YOU can accomplish equipment leveling through the use of leveling rings, shims, adjusting screws, equipment adjustments, or offset by software.

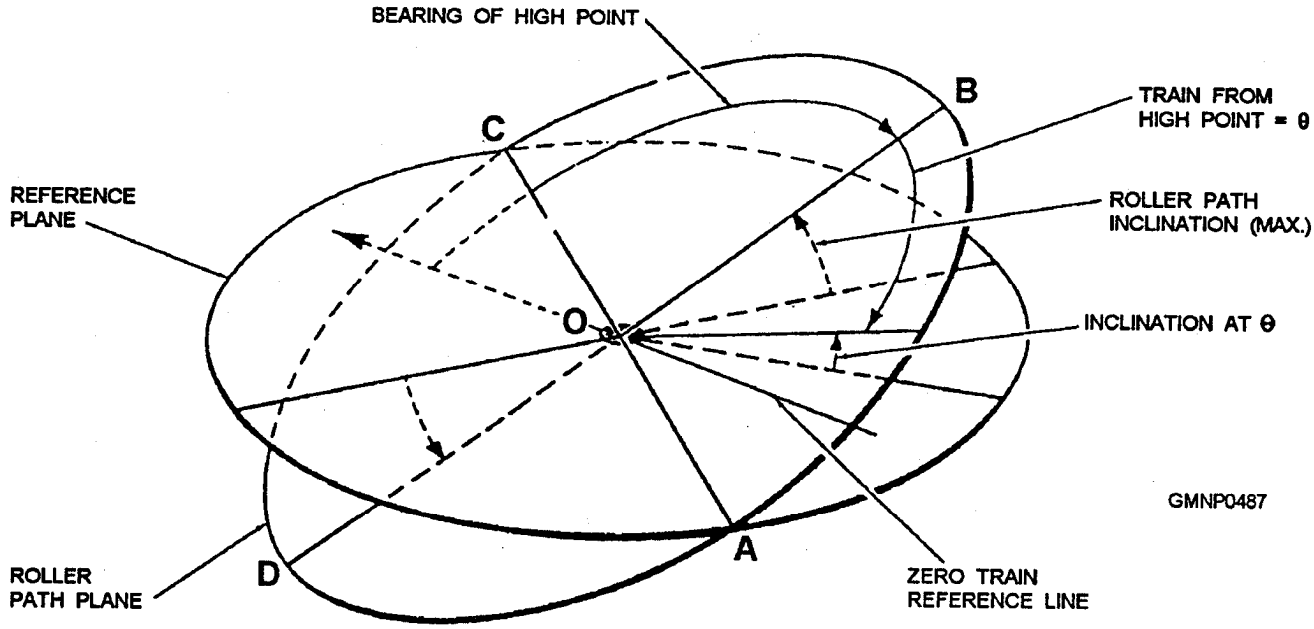

Figure 11-1.—Variation of roller path inclination with bearing.

A common device used to offset the effects of roller path misalignment is the roller path compensator. The roller path compensator is incorporated into the elevation receiver-regulator of most gun mounts. It is connected through gears and linkages to the train drive unit. The roller path compensator is set with the bearing and magnitude (in minutes) of the high point. As the gun moves in train, the compensator is moved and either adds or subtracts from the elevation order the number of minutes necessary to cancel out the roller path error at that bearing. For further information on roller path alignment, see NAVSEA OP-762, chapter 5.

Performance of Fire Control Radar RF-Optical Alignment

The fourth major alignment step is the verification of fire control RF-optical alignment (collimation). This is the alignment between the axis of the RF energy beam emitted by the fire control radar and an optical device attached to the radar antenna. During initial installation, the alignment is established and the optics are secured in place. During subsequent alignment checks, you can make adjustments to correct any errors detected. Radar collimation checks are normally conducted using a certified shore tower facility. Some radars, however, may be collimated while tracking a target. Figure 11-2 shows the essence of radar collimation.

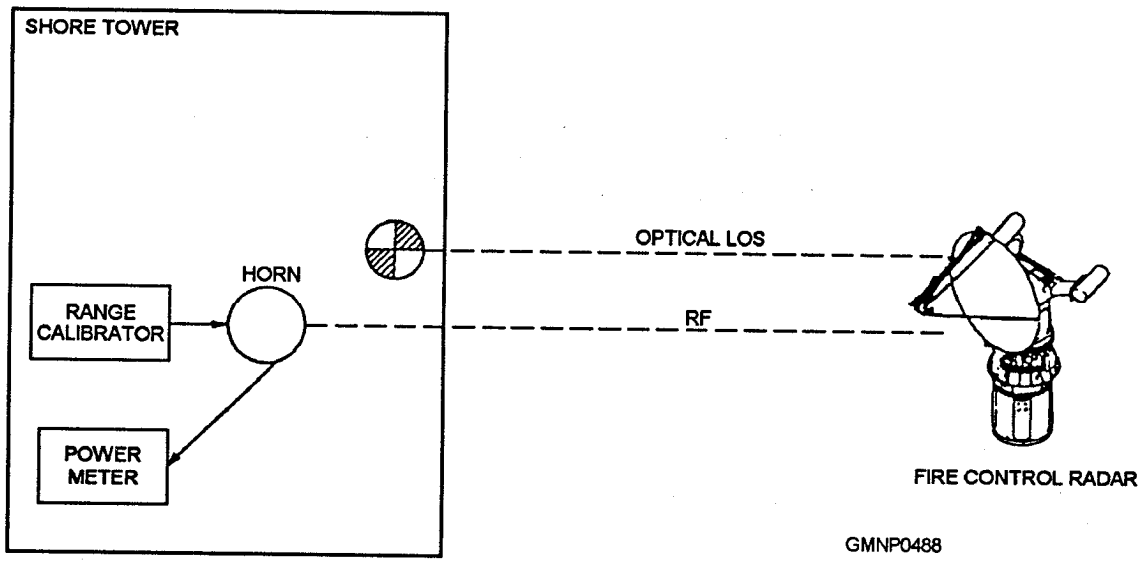

Figure 11-2.—Radar collimation.

Performance of Train and Elevation Alignment

The fifth major alignment step is the performance of train and elevation alignment. This alignment is performed by fleet support personnel to make sure the pointing lines are parallel. This procedure is the same one performed by fleet personnel to verify system alignment. Two procedures can be used for train and elevation alignment. The first is the establishment of train and elevation zero (theodolite method); the second is the train and elevation space alignment (star check method).

The theodolite method aligns train zero to the center-line reference plane and elevation zero to the roller path plane of the equipment. The more familiar star check method establishes parallelism between combat system elements by having them all sight on a celestial body, then aligning their dials to match those of the weapons control reference plane (WCRP). The star check method will be discussed further in the next section of this chapter.

Establishment of Bench Mark and Tram Readings

The sixth major alignment step is the establishment of bench marks and tram reference readings to furnish an easy means of verifying the alignment of equipment in the future. It is necessary to have reference readings because the equipment position data dials and data transmission synchros may become misaligned due to wear, vibration, or normal maintenance. These reference readings are normally established by a shipyard or NAVSEA representatives after all of the system elements are aligned. The application of these reference readings will be discussed further in the next section of this chapter.

Performance of Dynamic Train Alignment

The last major step is the train alignment between the reference and alignable combat system equipment not equipped with a telescope. This is accomplished by comparing equipment position with the position of the alignment reference while simultaneously tracking an isolated target. Fleet and fleet support personnel conduct this alignment.

These steps are used to establish the combat system alignment. Shipboard personnel are not usually directly involved in most of this process. What we have described thus far is what takes place while a ship is being constructed or in a major overhaul. established, it is the responsibility of shipboard personnel to verify and maintain the alignment of the system. This is the part of the combat system alignment that is more familiar to most fleet personnel.

ALIGNMENT VERIFICATION

Several procedures are fundamental to alignment verification. In this section we will describe a typical gun mount alignment verification procedure, including tram and bench mark readings and star checks. Since each system is configured differently, we will not attempt to explain in any detail how corrections are actually made.

Tram and Bench Mark Readings

Once established, tram and bench mark readings give the maintenance person a ready reference to check the alignment of the equipment. Apiece of equipment will be fitted either for tramming or with a fixed telescope for sighting a bench mark. Typically, gun mounts and missile launchers are *trammed,* while directors are *aligned* to bench marks. Some systems, however, may be fitted for both.

TRAM.— A gun mount is fitted with two sets of tram blocks-one set each for train and elevation. The blocks are welded, one to the rotating element and the other to a stationary element nearby. Elevation tram blocks are attached, one to the underside of the slide and the other to the trunnion support. Train tram blocks are attached, one to the bottom of the carriage and the other to the stand. Tram blocks are provided with machined plates with concave centers that fit the ends of the tram bar. The telescoping tram bar is the most common type in use and will be the only type discussed here.

The telescoping tram bar consists of two parts, one sliding inside the other. The parts have a small movement with respect to each other and are extended by an internal spring. Ascribe mark on the inner part is visible through an opening in the outer part. Engraved on the edges of the opening is a zero mark. When the inner scribe mark and the outer zero mark are aligned, the tram bar is at the correct length. The tram bar is placed in the tram blocks, and the gun mount is trained or elevated to compress or expand the bar until the marks are aligned. This serves to place a known distance between two fixed points, corresponding to a specific train or elevation angle. Once this angle is determined, it becomes the reference for future alignment verification.

Figure 11-3 shows a tram bar installed in a set of gun mount train tram blocks. Tram readings are taken as an average of several readings. The air drive motors are used to move the gun mount. Several readings **are** taken, moving the mount to compress the tram bar into alignment alike number of readings are taken, moving the mount to extend the bar into alignment. By moving the gun mount in both directions, you can detect any **lost** motion in the gear train. The readings are then averaged and compared to the reference readings that are inscribed on a plate normally attached to one of the trunnion supports.

NOTE

Elevation tram readings are almost always taken with the gun mount trained to 90° from the bearing of the high point. At any other train bearing you will get erroneous elevation readings due to the offsetting inputs of the roller path compensator. Refer to your ship's alignment manual for exact instructions for avoiding this situation.

BENCH MARK— The bench mark is used much the same as tram readings. The equipment to be aligned trains and elevates to align the telescope cross hairs with the bench mark. The bench mark, however, may be some distance from the equipment you are aligning. This increases the probability that the bearing to the bench mark will change in relation to your equipment due to hull distortion. No alignment adjustments should ever be performed based on a single tram or bench mark reading.

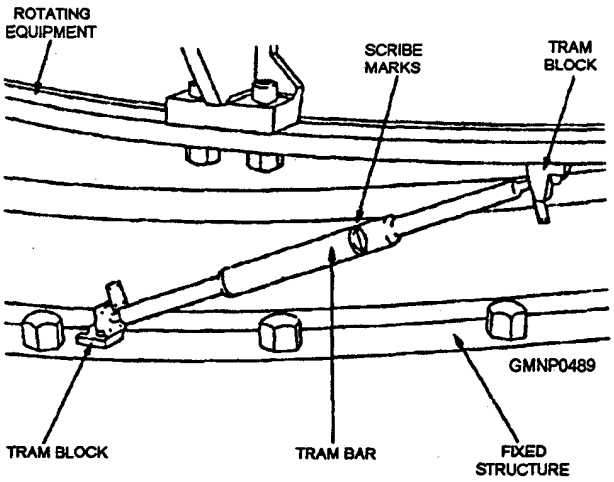

Figure 11-3.—Tram bar and tram blocks.

Star Checks

Star checks are used to verify parallelism between elements of the combat system and the WCRP. To illustrate this process, we will assume that the gun director is also the WCRP. We will now align the gun mount to the director. To begin with, you can fit the gun with a borescope and all the ballistic and parallax corrections are set at zero by the GFCS. The borescope is inserted into the breech of the gun and its cross hairs aligned with the axis of the bore.

In the evening, a celestial body (star) is selected, and the directories moved to track the star with its optics. Be careful not to choose a satellite. Satellites show up early and are usually very bright. This makes them tempting choices for star checks. However, once you have locked onto a satellite, you will find that it moves very quickly across the sky, making it difficult to track.

The gun is driven simultaneously with the air drive motors to track the same star through the borescope. Once the star can be seen through the optics of both the gun and the director, each is moved to pass the vertical or horizontal cross hair over the star. When the star is centered in the cross hair, the person at the telescope gives a "MARK." When both the director and the gun MARK at the same time, all the movement is stopped and the dials are read This is done several times from each direction from the bottom and the top in elevation and from the left and the right in train. Each crew then averages their train and elevation readings individually. The averages are compared and the gun is adjusted to the director if the error is out of tolerance.

Each time this is accomplished, the results of the verification, as well as any adjustments, are recorded in the Combat Systems Smooth Log. Refer to *Align Theory,* SW225-AO-MMA-010/OP762, and the appropriate volume of the SW225-XX-CSA-010 series of publications pertaining to your ship type for further information on combat systems alignment procedures.

BATTERY ALIGNMENT

LEARNING OBJECTIVES: Discuss the purpose and procedures for proper battery alignment.

The purpose of battery alignment is to adjust all the elements of a weapons system and fire control system so that the weapons can be accurately aimed and the

ordnance delivered on target. In other words, you should target the gun barrel to the exact point that the gun radar or sight is centered on.

Several things may cause your systems to be out of alignment—normal wear and tear, gun-bore erosion, improper maintenance, alterations/modifications to the system or ship, and so on. Initially, alignment is accomplished in the shipyard by the builder, but the continued accuracy of the ordnance installation relies upon constant maintenance.

SHIPYARD ALIGNMENT

The alignment of a weapons system is primarily concerned with the directions that the equipment (launchers, guns, directors, etc.) are pointed. To establish directions, you must use a definite and complete set of geometric references. The necessary references are contained in the geometric structure, called a reference frame. The reference frame consists of a reference point, a reference direction, and a reference plane.

Directions are expressed by giving instructions from a specific point. Any desired point maybe selected as the starting point, and once this selection has been made, it becomes a part of any measurement. Since this measurement must refer to the starting point, it is called the reference point.

After a reference point has been selected, it is necessary to have a reference direction from which to measure angles. The angles are measured about the reference point, starting from the reference direction. In naval ordnance, a fore-and-aft line, pointing in the direction of the ship's bow, is the most frequently used reference direction.

Angles expressing direction cannot be described completely unless a means is available for specifying the particular planes in which the angles are to be measured. This condition is met when a reference plane is selected. The horizontal plane (also called a deck plane) is one of the most commonly used reference planes. When the ship is afloat and you are comparing the horizontal plane to several other planes, two spirit levels are necessary for each comparison—the inclination of one plane with respect to another.

The three references described in the preceding paragraphs must all be used when measurements are given to describe directions. In the complete reference frame, directions are specified by two angles measured about the reference point. One angle is in the reference direction, and the other angle is a plane perpendicular to the reference plane and is measured from the reference plane.

Before any alignment can be accomplished on a new ship, you must establish the reference frame. During the construction of a ship, one baseplate is installed within the ship's hull. This plate is referenced to a similar plate on a fixed ground installation. The plate is leveled as accurately as possible before the ship is launched, and an imaginary base plane is figured from the average readings taken from the baseplate. The foundation and the roller paths for the fire control directors, launchers, and gun mounts are machined so that they are (as nearly as possible) paralleI with the base plane. The fire control reference plane or weapons control reference plane (WCRP) is the horizontal plane to which all combat system elements are aligned. The WCRP is perpendicular to the ship's center line (SCP) and parallel to the ship base plane (SBP). In practice, it is defined by the roller path plane of one and sometimes two of the major elements of the ship's combat systems installations.

After battery alignment in train has been accomplisheed, you can begin alignment in elevation. The purpose of this alignment phase is to set all the elements so that when they are positioned in elevation with their lines of sight parallel to their own roller path plane, the elevation dials of all the elements will read zero and the elevation synchros will be at electrical zero.

So that guns, directors, and launchers can be realigned to the same position, you can provide bench marks and tram readings. Once established, tram and bench mark readings give the maintenance person a ready reference to check the alignment of the equipment. Apiece of equipment will be fitted either for tramming or with a fixed telescope for sighting a bench mark. Typically, gun mounts and missile launchers are *trammed*, while directors are *aligned* to bench marks. Some systems, however, may be fitted for both. Upon completion of initial alignment or subsequent realignment by shipyard or support activities, you must submit a shipyard alignment report to the commanding officer of the ship. Included in this report are the alignment data, tolerances, demonstration results, and any other pertinent data for all of the combat systems and subsystems aligned by shipyard personnel. This data is maintained in the Combat Systems Smooth Log.

SYSTEM ALIGNMENT

Shipyard personnel initially install equipment using precision methods in a newly constructed ship. They take into account stress caused by operational loading and adjust for accurate alignment when the ship is waterborne and contains 90 percent of the total load (builder yard only). When alignment procedures are undertaken thereafter, the ship should contain 80 percent of the total load of fuel, water, armament, and stores, distributed normally. The greater part of the work will consist of checks and small adjustments unless the equipment has been damaged or moved out of alignment.

System alignment requires orienting and adjusting several components to each other so that they function properly together as a whole. No alignment work should ever be undertaken without first making careful tests to make certain that adjustment is necessary. An incorrect or unnecessary adjustment can cause serious problems in the system.

SHIPBOARD ALIGNMENT

The alignment requirements for a weapons system include the internal alignment of each of the components and system alignment of the different components or equipment with each other. The internal alignment of an ordnance component is established by the manufacturer. A high degree of machining and fitting of structural parts assures good internal alignment. If any basic alignment is necessary because of faulty manufacture, overhaul at a shipyard usually is required. Each director should be internally aligned with the ship's references. All the parts of the weapons system are aligned to the reference while the ship is being outfitted or in dry dock, and the whole system is tested. When the ship is afloat, you must recheck the operation of the system. If there are serious distortions, the ship is returned to the shipyard for adjustments.

The launchers and gun mounts must be aligned to the directors in train and elevation.

Before any alignment work is undertaken afloat, you should perform a transmission check. Synchro and dial errors corrected at this point will keep you from compounding the errors or from introducing errors into the ensuing alignment procedures. Initially undetected errors would be revealed before the alignment was completed. At this point, you could be faced with the task of redoing one or more of the alignment phases.

You should not proceed with synchro alignment unless the preliminary checks show a misalignment. If the synchro is close to zero, you should make only the fine adjustment.

MOUNT ALIGNMENT

Precise mount alignment requires extreme accuracy in the performance of alignment checks and adjustments. These checks should be made with the ship moored to a pier or anchored in calm seas.

Train alignment checks provide an accurate method of determining the degree of parallelism between the zero train lines of all the components of the system. When the director is trained to any point and the mount dial pointers are matched with zero settings, the director and mount lines of sight are parallel in train.

Because the ship is afloat, it is impracticable to use multiple targets to obtain parallelism between the mount and director. However, if the lines of sight of both the director and the mount are aligned on a target at infinite range, they will, for all practical purposes, be parallel. The most accurate method of alignment is to use a celestial body.

When train alignment is performed simultaneously for several components, the train dial readings from all the stations should be transmitted to a central station (such as CIC) for systematic recording. The recorders at the individual components should cross-check all the readings to eliminate possible errors in recording the readings. Rotation of the earth and ship's motion may cause the line of sight to drift from the target, but this drift is not detrimental as long as the line of sight is on the target when the reading is taken.

The mount is aligned in elevation to the director. It is elevated in manual control to bring its bore (or launching rail) into a position parallel to its roller path plane (at a point of known inclination) within 3 minutes of arc. All the elevation indicators are adjusted to indicate zero elevation.

FIRING CUTOUT MECHANISMS

LEARNING OBJECTIVES: Discuss the importance of firing cutout mechanisms.

It is hard to overstate the importance of checking the firing cutout mechanisms after making the original

alignment or after doing any work or repair on the mount that would disturb the firing cutouts. Every casualty caused by the ship's firing into their own superstructures testifies to the seriousness of any misalignment of the firing stop mechanisms. In every case, these casualties could have been prevented. These casualties have resulted from negligence on the part of ship's force personnel-the cams were cut improperly (in some cases misaligned) or the firing cutouts were inoperative through a lack of preventative or corrective maintenance.

As you may remember, firing cutout mechanisms are designed to interrupt electrical firing circuits and firing mechanism linkages whenever guns and launchers are trained or elevated to position where firing the mount would endanger personnel or cause damage to the ship. They should not be confused with the limit-stop assemblies that are used to limit the movement of some mounts to a safe firing zone. Firing cutout mechanisms do not interfere with the free movement of the gun or launcher.

The Naval Sea Systems Command has issued definite instructions for personnel responsible for plotting, cutting, installing, and checking firing cutout cams and mechanisms. These regulations are to be complied with in all cases. In addition, special instructions govern particular installations. The computations for the safety clearances of the mount relative to the ship's structures and equipment are complicated and extensive. A high degree of precision and skill is required to make these computations and to prepare and install the cutout cams in the mount. The computations are now done with computers at the Naval Surface Weapon Center (NSWC), who prepares the cutout data for the requesting ship. NSWC also prepares the cutout cams and assists in their installation and adjustment.

When anew cam is installed, it is essential that the two train reference points be reestablished. These are the train B-end stopped position and the nonpointing zone cam arrested position. The nonpointing zone switches must be set accordingly. NSWC personnel will assist in performing this task

The firing cutout cams are plotted, scribed, and cut during the final stages of the initial installation or overhaul period. This is accomplished after all the installation and alterations to the topside, superstructure, masts, and rigging are completed.

Procedures for scribing and matching the firing cutout cams are outlined in the applicable system OPs.

Performance of the cams should be checked before each firing, whenever new cams are installed, and as prescribed by the PMS schedule of your system.

The train and elevation limit stops restrict mount movement under certain conditions. When activated, the limit-stop system neutralizes the associated power drive, thus limiting the movement of the mount. The limit-stop cam controls the deceleration rate of the power drive of the mount. Train and elevation require different rates of deceleration, so their cams differ in contour. The actuating cams are identical. When the mount approaches a nonpointing zone, the actuating cams start the limit-stop system.

An adjustment screw is secured to the bottom of each limit-stop cam. As an aid in alignment, scribe lines are scored into the cams. The cam-stacks, which indicate position-plus-lead to the automatic-pointing-cutout and automatic-firing-cutout systems, have a vernier that permits simultaneous adjustment of all of the cams in the stack, and each cam can be adjusted to a vernier in its base.

Firing cutout cams, limit-stop cams and associated shafts, switches, and components are preset by the manufacturer and checked by the installing activity. These cams do not require routine adjustment. They should be checked periodically and reset only if they are not within plus or minus 1° of actual mount settings.

RADAR ALIGNMENT

LEARNING OBJECTIVES: Discuss the importance of radar alignment on a guided missile battery.

All the elements of a guided missile battery are aligned in the same manner as a conventional weapons battery. There is, however, one additional step you must accomplish before the physical alignment of the battery. You must first align the radar reference beam and the boresight telescope of the radar antenna. This can be accomplished by using a shore tower approximately 100 feet high and at least 1,300 feet from the ship. The tower must be equipped with an optical target and a tunable radar transmitter.

On some missile systems, the radar beam is used as the reference for this alignment. The radar beam is trained and elevated to the tunable radar transmitter and electrically aligned. The boresight telescope is then adjusted to the optical target and locked in place. In

other missile systems the boresight telescope is the reference. The boresight telescope is trained and elevated to the optical target on the tower and then the radar beam is aligned to the tunable transmitter. This is the most critical alignment, because, in both cases, the boresight telescope, after alignment, becomes the only reference line of sight for the director. Benchmark data is provided to check this optical alignment periodically.

The above explanation is for dry dock alignment performed by shipyard personnel, perhaps assisted by the ship's force personnel. When the ship is afloat, the radar reference beam is again checked by the ship's force. While at the pier, the shore towers are used. At sea, all the guided missile ships will use bow and/or stern towers installed according to current NAVSEA instructions. Each tower will contain an optical boresight target, a capture antenna, and a track and guidance antenna.

FINAL ALIGNMENT AND TEST

LEARNING OBJECTIVES: Discuss the importance of testing after a battery alignment and recording the results in the Combat Systems Smooth Log.

The success of a weapons system depends to a great extent upon the mechanical and electrical alignment of the system. Minor errors in synchro or dial adjustments can result in missing the target by a great distance.

If any error corrections were made to train or elevation receiver-regulator dials, you must establish new alignment readings. Obtain the detailed instructions for your system and follow them with care.

Upon completion of the train and elevation checks, the elements of the system are rechecked against their respective bench marks and new dial readings are recorded in the ship's battery alignment and fire control smooth logs.

Although both of the above tests can and should be conducted by the ship's force, it would be wise to ask for technical assistance from a repair facility if you are unsure of the procedures.

Modern ordnance installations are operated almost exclusively in automatic control, except under certain special conditions or in emergencies. Therefore, it is especially important for an installation to be aligned accurately for automatic operations. If the alignment methods described in this chapter are used so that the dials of each element are aligned accurately with the dials of the reference element, you should end up with a good alignment. It is advisable to check the results under conditions which approximate those under which the equipment will be used. The checks should be performed with the system in automatic control and with the parallax equipment functioning.

If possible, select several targets with different bearings and at ranges that will be as close as possible to the mean battle range for the equipment. For antiaircraft installations, try to use air targets which are at an elevation angle near 45°. The target should produce a slow bearing so that accurate tracking is not difficult.

Train and elevate the director to track a target as accurately as possible, especially in train. When on target, the director-trainer will call "MARK" by telephone to the operators at their stations. The operator at each station observes the target through the boresight telescope or the boresight and makes a note of any train error present when the director is on the target. This should be done for targets at various bearings, some moving to the right and some moving to the left. In this check,some small error is to be expected because there is always some lag-and-lost motion in the follow-up servomechanisms. Regardless, the error observed when tracking to the left should be essentially equal to that observed when tracking to the right and should be in the opposite direction. If the errors do not change direction when the direction of tracking is changed or if they are considerably larger for one tracking direction than the other, a misalignment is indicated This can be corrected by adjusting the train synchros. Before any adjustment is changed, however, a careful analysis should be made to be certain that the error is not caused by some other factor. For example, a misalignment of the sight telescope could cause an error. This should be corrected by boresighting the telescope, not by adjusting the synchros. Adjusting the synchros, in this case, would result in firing errors. If, after careful analysis, an adjustment is made to the synchros, a check should be made to see whether or not a corresponding adjustment must be made to the dials or any other part of the system.

As you can see, every component in a weapons system is linked either directly or indirectly to the others, as are the operators and maintainers of the equipment. You must think and act in terms of the weapons system

as a whole. What you do, and how your equipment operates, will affect the operation of the system as a unit.

Before undertaking any alignment tasks, you should become thoroughly familiar with the contents of SW225-AO-MMA-010/OP762, *Align Theory, Theory of Combat System Alignment Manual.* This publication will assist you in obtaining a general understanding of the total combat system alignment methods. It defines combat system alignment, why it is needed, and what it does and does not accomplish. The principles of alignment and the general reasoning behind the procedures involved in alignment are explained. Detailed instructions for the alignment of specific systems are not covered in this TRAMAN.

The SW225/OP 2456 series, *Total Combat System Alignment Manual,* contains specific alignment procedures for each class of ship. This publication is intended to be used as a guide when performing combat system alignment. It is to be used in conjunction with PMS testing and maintenance. PMS tests are designed to check the proper operation of all the subsystems, either as a single entity (total combat system) or as individual subsystems. Although most PMS tests are not developed solely for alignment purposes, review of the results of those tests that provide alignment verification over a period of time will indicate trends toward out-of-tolerance alignment conditions.

The importance of maintaining an alignment smooth log cannot be overemphasized. Upon completion of the alignment, data must be documented to provide information for future alignments and to inform responsible personnel of system and subsystem alignment status. A complete and accurate alignment data package is essential for effective combat system alignment.

Upon completion of the initial, or a subsequent, alignment by a shipyard or support activity, an alignment report is submitted to the ship's commanding officer. The data in this report becomes the base line information in the Combat Systems Smooth Log for future system alignment verification. The Combat Systems Smooth Log is a perpetual record of all alignment, calibration, and internal ballistic data. The importance of maintaining the smooth log cannot be overemphasized. A general outline of data that should be included in the smooth log is provided in table 11-1. Reproducible forms for use in the Combat Systems Smooth Log are located in the back of SW225-AO-MMA-010/OP762.

The Combat Systems Smooth Log, section J, contains weapon system configuration data from the *Ship Configuration and Logistics Support Information System* (SCLSIS) Manual for your ship. The central SCLSIS data base contains the configuration information related to each unit's installed and planned equipment hardware. It identifies the proper level of logistics support required to maintain each piece of equipment. Through the SCLSIS process, configuration data is passed to the Weapon Systems File (WSF) at SPCC, which is used to determine spare parts requirements for ships. The on-board availability of spare parts is critical to keeping your systems up and operational. Therefore, you should always make sure this section is 100 percent accurate. For more information on SCLSIS and SCLSIS reporting, see NAVSEA Technical Specification 9090-700A.

SUMMARY

The main role of a GM is to deliver the ordnance on target. Your weapon system may be fully operational, but if you cannot hit your target, it's useless. The importance of accurate battery alignment cannot be overemphasized. Although some alignment procedures are described in this chapter, it is more important that you know where to find alignment procedures and instructions that are written specifically for the systems you will be working with on a daily basis.

Table 11-1.—Smootb Log Data and General Outline

Data	S	G	M	U	N
Section A - Alignment					
a. Record of checks (changes if any), dates held, and methods used	X	X	X	X	X
b. Collimation data dates and results of radar antenna and X beam alignment	X X	X	X		
c. All plots of roller path, cutout cams and zones (firing and radiation), and horizon checks	X	X	X	X	
d. Bench mark readings and plate locations, tram readings (including bearing of mount for elevation tram, when applicable)		X	X	X	
Section B - Calibration		X			
a. Double echo checks and resultant settings				X	
b. Sonar calibration and source levels					X
c. Divergence					
Section C - Range finder calibration		X			
a. Record of range finder calibration checks and adjustments		X			
b. A curve for range finder, and a smooth copy of each operator's B curve					
Section D - Erosion		X			
a. Star gauge data		X			
b. Records of erosion gauge readings		X			
c. Records of bore searches		X			
d. Equivalent service rounds					
Section E - Rounds fired Entries in tabular form for each gun and/or launcher showing rounds fired, projectile, powder charge, etc.		X	X	X	
Section F - Firing reports File of all firing reports kept in chronological order		X	X	X	
Section G - Competitive exercise reports File of all competitive exercise reports		X	X	X	
Section H - List of test equipment	X				
A list of test equipment grouped by type and listed by title, mark, mod, and serial number		X	X	X	
Section J - Ship Configuration and Logistics Support Information System (SCLSIS)	X				
Subsystems and equipment portion of current SCLSIS		X	X	X	

Legend

S = Search Radar Subsystem
G = Gun Weapon Subsystem
M = Missile Weapon Subsystem
U = Underwater Weapon Subsystem
N = Navigation System

CHAPTER 12

MAINTENANCE

As a Gunner's Mate, maintenance is at the heart of your profession. For you, the art of gunnery comes down to your ability to get the "rounds out" on command safely. The reliability of your gun is directly related to your skill as a maintenance person. This chapter will cover a wide variety of maintenance items. We will begin by discussing the essentials of preventive and corrective maintenance. Following this, we will discuss lubrication, corrosion control, barrel maintenance, and tools. We will then discuss the content and use of equipment maintenance manuals. We will also provide some practical instructions for performing common maintenance procedures, such **as** replacing hydraulic seals and making mechanical adjustments. Finally, we will discuss some safety precautions that apply to maintenance.

The information in this chapter assumes you have a functional knowledge of the Maintenance and Material Management (3-M) Systems. You may find it useful **to** review the requirements of the 3-M Systems before beginning this chapter.

PREVENTIVE AND CORRECTIVE MAINTENANCE

LEARNING OBJECTIVES: Discuss the difference between the maintenance completed by the ship's force, tender repairs, and repairs handled by the shipyards. Briefly describe the Phased Maintenance Program (PMP) and its primary elements.

The term *maintenance* includes many different types of tasks. However, all maintenance is classified as either preventive or corrective. In this section we will discuss the elements and implications of preventive and corrective maintenance. The intent of this section is to provide you with a sense of the importance of your role in keeping your gun operating smoothly and safely.

PREVENTIVE MAINTENANCE

Of the two main classes of maintenance work, the most important, which accounts for most of the maintenance work you do, is preventive maintenance. Preventive maintenance consists mainly of the regular lubrication, inspection, and cleaning of your equipment. The purpose of preventive maintenance is to prevent malfunctions before they appear and discover existing malfunctions before they become critical. Preventive maintenance is based on the well-known principle that an ounce of prevention-in the form of adequate routine maintenance-is worth a pound of cure-in the form of emergency repair, replacement, and overhaul.

Preventive maintenance is neither dramatic nor exciting. While the need for routine lubrication is obvious, you may envision your leading petty officer (LPO) as being a little obsessive when it comes to gun mount cleanliness and inspection. You may think time spent cleaning and inspecting components that have always been in good shape to be a waste. However, you will realize this time has been well spent when you consider the impact that an undiscovered hydraulic leak or a missing retainer clip could have in the midst of firing the gun. These situations represent major casualties just waiting to happen with serious and sometimes fatal consequences. By taking a little time and trouble to do routine preventive maintenance now, you can save yourself a lot of work later by heading off breakdowns and time-consuming emergency repair jobs.

The Navy uses maintenance requirement cards (MRCs) in the planned maintenance system (PMS) to make sure routine maintenance jobs are done at the required regular intervals—daily, weekly, monthly, and so on,—and no steps are forgotten.

MRCs are obtained from the Gunner's Mate under whom you work. They provide **a** step-by-step guide for performing **a** specific maintenance action. MRCs prescribe the minimum required preventive maintenance for **a** given gun mount. MRCs cover all lubrication, some inspections, and some cleaning. Anyone with a little training can perform maintenance from an MRC. However, an MRC will not tell you to inspect mechanical linkages for cracks or missing retainer clips while you lubricate each of its pivot points. It will not instruct you to determine the cause of a fresh puddle of hydraulic fluid on the deck under a piece of gun loading machinery and initiate steps to have it repaired. As you become more knowledgeable in gun

mount maintenance, you will develop an appreciation for the importance of these unstated commonsense preventive maintenance practices.

As stated earlier, MRCs cover all minimum lubrication requirements. However, you or your LPO may determine that it is necessary to lubricate certain mechanisms more frequently during very heavy operational conditions. This is acceptable and shows that you possess a good understanding of the actual purpose of maintenance—to keep the system operational!

Inspections required by MRCs normally consist of checks that verify fluid levels in hydraulic and gearbox reservoirs and mechanical adjustments and clearances. The term *inspection* may also be applied to MRC-directed equipment operational checks, electrical continuity checks, and gun order checks.

A good example of cleaning maintenance required by an MRC is the removal of lubricants from the gun barrel before firing and the removal of residue from the barrel after firing. Other cleaning maintenance covered by MRCs includes the cleaning of electrical contacts and the removal of excess grease from around grease fittings after they have been lubricated. The general cleanliness of your equipment is also an important factor. Dirt and dried hydraulic fluid on machinery make it less likely that you will notice a fresh leak or damaged component. It is also much more pleasant to work on clean equipment.

In addition to MRC-guided preventive maintenance, you have the system maintenance manuals. These manuals contain detailed descriptions of the operation and care of the gun systems. You should be intimately familiar with these manuals. They include all the clearances and tolerances for the mechanical systems of the guns as well as detailed procedures for component replacement. MRCs do not require the verification of the majority of these adjustments and clearances. Over the years, mechanical equipment wears, the hull of the ship twists, and mechanical adjustments slip. For this reason it is a good practice to review system maintenance manuals to identify these adjustments and clearances. Routinely including the verification of some of these adjustments in your preventive maintenance schedule will serve to extend your knowledge of the operation of the system while helping to ensure its reliability. These adjustments also make good topics for professional training. Mechanical adjustments are covered in more detail later in this chapter. Further discussion on maintenance manuals is also covered later in this chapter.

NOTE: Be sure to consult with your supervisor before attempting to correct any equipment misalignments.

Let's tie all these ideas together as we close out this section on preventive maintenance. As a maintenance person you have three good tools available to help you keep your equipment operating at peak performance—MRCs, system maintenance manuals, and common sense. MRCs form the foundation of preventive maintenance by providing minimum maintenance standards. System maintenance manuals provide additional in-depth system operation and maintenance information. Effective preventive maintenance requires a high level of technical knowledge mixed with some good old-fashioned common sense. You can do the minimum required maintenance and be within the letter of the law, but still have the least reliable gun on the waterfront, and be known as a poor maintenance person. You may believe that you are a maintenance person because you can complete the MRCs assigned to you. However, if the extent of your maintenance expertise encompasses only the requirements of your systems MRCs, then you are really only a maintenance person's helper. A maintenance person has, or is continually working on, an in-depth understanding of the system. When you invest that little extra time on the gun while performing routine lubrication, you can take a good look at the gun to make sure all is in order. You will see in the next section how preventive maintenance is the foundation of corrective maintenance.

CORRECTIVE MAINTENANCE

Corrective maintenance involves the repair or replacement of gun components that have been identified as worn, defective, or broken. In the course of routine preventive maintenance, you will discover components that require repair. This is the ideal situation—find the casualty and repair it before it affects the operation of your gun in a firing situation. Occasionally, however, in spite of the best preventive maintenance, equipment will unexpectedly malfunction or breakdown altogether during an exercise. You must acknowledge this eventuality and be ready to deal with it when it occurs. Remember, a comprehensive preventive maintenance program will keep these occurrences to a minimum.

The more you know about how your equipment works, the better you will be at troubleshooting and repair. Experience is a great teacher, but you cannot wait until your gun breaks down in battle to find out how

to repair it. This is where the knowledge and habits you developed in performing preventive maintenance really pay off. The maintenance person who has studied and understands the details of how the system works will have a head start in detecting the cause of any malfunction. This is especially true of electronic control circuit casualties. Casualty diagnosis is the heart of the corrective maintenance problem. Once the casualty has been accurately diagnosed, component replacement is normally a simple task. If you routinely experience casualties in your system during firing exercises, especially mechanical and hydraulic casualties, you need to take a serious look at your preventive maintenance habits. Constant test operation and inspection of your gun system is the only sure way to detect problems before they can get serious enough to put you out of action.

PLANNED MAINTENANCE SCHEDULES

Until now, your experience in PMS management has probably been limited to duties as a work center supervisor. As a result, you were closely involved in the day-to-day upkeep of the cycle, the quarterly, and the weekly PMS schedules of your particular work center. As an LPO, you may frequently find yourself assigned as a group supervisor. This means you will be supervising other work centers within your division or department. Consequently, you will be spending more time in the upkeep of PMS schedules. As you can see, knowing how to makeup the cycle, the quarterly, and the weekly schedule is an important aspect of a CPO's job.

Although the department head is responsible for the preparation of the cycle schedule, this duty is often delegated to the chief. Special care should be taken in the preparation of the cycle schedule because it will directly affect the long-range scheduling of PMS due to operational schedules, overhaul cycles, and availability periods.

The cycle schedule is used as the basis for the preparation of the quarterly schedule. Concurrently, the quarterly schedule is used as the basis for preparing the weekly schedule.

Because you should already be thoroughly familiar with the preparation of PMS schedules, it will not be discussed at any great length in this text. These procedures are described in detail in chapter 5 of OPNAVINST 4790.4.

Maintenance Skills

In performing any type of maintenance, a Gunner's Mate requires specific information relating to the particular equipment to be maintained and repaired. You must also possess the required skills and knowledge that apply to the maintenance of a myriad of equipment. The information needed can be found in the particular OP of the system, but skill and knowledge take many hours of dedicated training to develop and fine tune.

We can assume that you have developed those general skills by following the procedures as set forth in your personnel advancement requirements (PARs). As the LPO, you must be prepared to teach those skills to your subordinates. Your trainees will not be too impressed if you do not know how to take an ohmmeter reading or check the clearance of a microswitch. You must learn more about the overall and continuing plan of maintenance and the responsibilities of administration, as well as the technical duties in maintenance.

Maintenance Planning

A study of the occupational standards shows that the GM1 must be able to overhaul, repair, test, adjust, and record all authorized maintenance performed. Note that nearly all the knowledge factors are required at the GM3 and GM2 level, with exception of the principles of receiver-regulators, functions of fire control, and supply procedures. You are expected to have knowledge of the basic geometric layout for drawings and sketches, to be able to prepare freehand sketches, and to read and interpret diagrams and service instructions.

The success of any planned maintenance program depends upon the cooperation you receive at the working level. Your maintenance personnel need to understand how their day-to-day work of lubrication, cleaning, and similar routine upkeep helps prevent costly and time-consuming breakdowns and the subsequent hard repair work.

The responsibility of the leading GM in administering the PMS and the MDS is described generically for PO1 in OPNAVINST 4790 (latest revision). Planning the daily maintenance work is your responsibility.

System Preventive Maintenance

Preventive maintenance components are built into some ordnance systems to help detect faults within the

systems. One of these components is a ground detection indicator.

The ground detection indicator is a continuous monitoring system designed to detect a system ground. Since most control circuits in ordnance systems are powered by ungrounded 115-volt, 60 hertz, single-phase current, the first ground is not very important from an operational point of view. However, if the first ground is not discovered and a second develops, the result could be an illogical and destructive sequence of system operation. The reason for this is that two grounds act as electrical conductor between the grounded components. When the ground detector indicates (by light or buzzer) that some of the control circuitry is grounded, you should determine the location and cause of the ground. The elimination of most grounds and potential grounds is good maintenance and housekeeping.

MAINTENANCE BY SHIP'S FORCE, TENDER, AND NAVY YARD

Most of the maintenance work on armament aboard ship is done by the strikers and Gunner's Mates themselves as part of the ship's routine. This is called ship's force maintenance.

The ship's force, however, does not have the facilities or the skills to perform certain less frequent, but equally necessary, maintenance operations. Examples of this type of operation are repair of gunsight or boresight telescopes and calibration of pressure gauges. Work of this nature is done aboard repair ships and tenders that have the equipment and skilled personnel required for this type of repair work,

Lastly, there are some jobs, like major overhaul of hydraulic systems or repair or replacement of roller paths, that are customarily completed in shipyards. Such work may be completed by yard workers, by the ship's force, or by both. Maintenance work completed in shipyards is termed *navy yard maintenance.*

Routine overhauls are scheduled far ahead of time at a specified navy yard for each ship. To get the most out of the overhaul work, you must keep records of mishaps, signs of defects, or poor operation of gunnery equipment so that each of the items can be taken care of during the overhaul. You must also keep records of all repair work done by the ship's force. Keeping the records is part of your job; the weapons officer must have this information to plan the overhaul work. Pending maintenance and equipment history records are maintained as part of the maintenance data system (MDS) that is a part of the 3-M Systems. 'he documentation of equipment malfunctions is briefly described in the "Common Maintenance Procedures" section of this chapter.

Work by tenders and repair ships is also scheduled, so it must be planned for ahead of time. Authorized alterations (ORDALTs) are also made aboard these ships when possible, although some may be accomplished by ship's force but supervised and verified by the appropriate Navy Sea Support Center, Atlantic or Pacific (NAVSEACENLANT/PAC). ORDALTs requiring special team efforts will be accomplished under the direction of NAVSEACEN personnel and supported, as required, by the in-service engineering agent and/or contractor representatives. ORDALTs usually state by whom the work is to be done. Changes of a minor nature are authorized by NAVSEASYSCOM instructions.

The upkeep period is time assigned to a ship while moored or anchored or when the ship's force and other forces afloat can work to perform upkeep duties without interruptions.

Special assistance in maintenance, especially for new equipment, may be obtained from contract service engineers who are specifically trained for specific equipment, or from mobile ordnance technical units (MOTUs) which consist of military personnel who have been trained to handle certain equipment and can be assigned to instruct others in its use and care.

OVERHAUL WORK PACKAGES

All U.S. Navy ships are assigned regular overhaul availability cycles for the purpose of maintenance and updating/improvement of the ship and its installed equipment. The two types of availability are the Regular Overhaul (ROH), and the Phased Maintenance Program (PMP). As a leading GM, you will be closely involved with the planning and implementation of these programs. In addition, you will also have to supervise the maintenance of your assigned equipment through the use of Inactive Equipment Maintenance (IEM).

Regular Overhaul (ROH)

One of the most important considerations affecting the performance of ship's overhaul is the determination of what work is actually to be performed during the ROH. This phase of the planning process is developed into the Ship Alteration and Repair Package (SARP) or the Integrated Work Package (IWP) as applicable.

Because the SARP/IWP is both a planning and working package for ROH, it will be addressed at this time.

For most ships, a SARP is the document that defines and authorizes work to be done during the overhaul, assigns the level of accomplishing activity for each work item, and indicates cost estimates for each shipyard job. The IWP performs the same functions for small ships (ARS/AFT/MSO) when the OPNAV 4790.2K maintenance forms are arranged in order by ship system. The purposes of the SARP (or IWP) areas follows:

1. Integrates related customer work requirements

2. Resolves redundant and conflicting work requirements

3. Identifies work on a ship system basis

4. Serves as the single source document for all customer authorized work

The SARP/IWP is maintained as a continuing document that contains the information necessary for the following:

1. Estimating the overhaul cost and duration

2. Early decision making by higher levels of command concerning budgeting, finding, operating schedules, and overhaul duration

3. Commencement of additional advance planning, design work, and material procurement by those activities responsible for supporting and conducting the overhaul

Key inputs for developing the SARP/IWP are as follows:

1, The Current Ship's Maintenance Project (CSMP) as submitted by the type commander to the cognizant Planning and Engineering for Repairs and Alterations (PERA) approximately 12 months in advance of the ROH start date

2. Results of the Pre-Overhaul Tests and Inspection (POT&I)

3. Type commander Title "D" SHIPALT Authorization Letter

4. NAVSEASYSCOM Title "K" SHIPALT Advance Planning/Authorization Letter

For ships using the SARP overhaul package, the following action will be taken (approximately 90 days before the overhaul commencement or when the SARP screening action has been provided to the ship):

1. Work discovered during POT&I and designated for IMA accomplishment will be documented on an OPNAV Form 4790.2K and coded for availability.

2. Work previously documented into the CSMP file, but which was originally coded for other than IMA accomplishment, and for which subsequent screening action changed the accomplishing activity to IMA, will require submission of a correction document (OPNAV Form 4790.2K) to change the type of availability code.

The above work items, along with those already coded for IMA accomplishment in the ship's CSMP file (plus any desired master job catalog items), will form the IMA work package for preoverhaul and concurrent IMAVs.

The time between regular overhauls varies from 2 years to 5 years. The interval is the maximum period consistent with keeping the ship infighting trim.

An analysis of the problem of building, overhauling, or converting ships reveals that the following factors play essential roles:

1. The ship must be available for the uninterrupted accomplishment of yard work,

2. The contemplated work must be decided upon, arranged in order of priority of accomplishment, and actually authorized to be performed.

3. Sufficient finds must be available to cover the cost of the work

4. Material must be available.

5. Personnel must be available to do the work

Advance Planning

The advance planning stage of the regular overhaul begins approximately 18 months before the scheduled beginning of the overhaul. During this stage, the plans progress from a very rough to a refined and definite schedule. In the broad sense, advance planning provides a solid foundation for the accomplishment of work on naval ships in all shipyards. Availabilities of ships are approved by CNO on a fiscal-year basis. Before they are approved, schedules are commented on by forces afloat and NAVSEASYSCOM,

The main factors considered in formulating the overhaul schedule are as follows:

- The home port of the ship

- The intervals between the previous overhaul availabilities of the ship and the proposed overhaul
- The placing of the ship in the home shipyard or shipyards capable of performing any required special type of work
- The provision of a level of work in all shipyards to avoid laying off personnel intermittently
- The probable availability of critical material on important jobs
- Any special factors that may arise

The final approved schedule represents the best compromise possible. It is used as a basis for planning by the material commands, the shipyards, and the forces afloat.

It is quite possible, in view of the remote, long-range nature of the schedule, that changes and adjustments may be required from time to time. As the need arises, proposed changes are evaluated and approved/disapproved by CNO. Changes in start or completion dates may be made by the type commander with the concurrence of the shipyard commander or the superintendent/supervisor of shipbuilding (SUPSHIP) when the change is 3 weeks or less from the assigned date.

Advance planning on the part of the ship's personnel is necessary for a successful overhaul. The commanding officer must ensure that adequate plans and preparations are made for the accomplishment of the following activities:

1. Work of ship's force
2. Training of the ship's personnel during the overhaul
3. Security of the ship's spaces, including protection against fire, flooding, theft, and sabotage

All work within the capacity of the ship's force should be accomplished by the ship's personnel. A schedule of the work of the ship's force should include the names of the persons responsible for performing the work, the estimated date of completion, the estimated number of work hours required for completion of the work, and a list of the necessary materials or tools required from the shipyard to perform the work.

Plans for training during the overhaul period should outline the objective to be accomplished by the end of the period. Local training facilities and fleet schools should be used to the maximum degree consistent with obtaining a good overhaul.

While the ship is undergoing overhaul, special precautions against fire, flooding, theft, and sabotage must be taken. The shipyard is prepared to help with matters of security, but the responsibility for establishing security measures remains with the ship's personnel. The overhaul plan should include the necessary organization for these precautions.

PRECAUTIONS AGAINST FIRE.— The greatest continuous hazard to ships undergoing overhaul is fire. Disruption of fire-fighting facilities and burning or welding work in progress are the most dangerous conditions contributing to fire hazards. The ship's force is responsible for providing properly trained fire watches for each burning or welding job in progress aboard ship. All watch personnel should be instructed in the location of the shipyard fire alarm boxes nearest to (or on) the ship and the current shipyard directives concerning fires and fire fighting.

PRECAUTIONS AGAINST FLOODING.— The possibility of engineering spaces flooding through sea connections or through leaks in piping systems must not be overlooked. The security plan should require frequent inspections of all unattended spaces in which this possibility exists.

PRECAUTIONS AGAINST THEFT AND SABOTAGE.— Responsibility for the security of the ship against acts of theft or sabotage rests largely with the security watches and the inspectors of shipyard work. Security measures should be enforced tactfully, so shipboard personnel will not be offended. To reduce the possibility of theft, you should place all tools, valuables, and clothing in locked stowage. Stowage spaces within the shipyard may be available to the ship's force for this purpose. Acts of sabotage can best be prevented by the vigilance of watch and duty personnel. Periodic patrols conducted at irregular intervals through ship's spaces and proper identification of all personnel boarding the ship are basic requirements for security.

Ship's Force Overhaul Management System (SFOMS)

Effective management of resources is a continuing challenge at every level of command in the Navy. Spiraling costs, the growing complexity of mechanical and electronic components, and the limitations of funds, skills, and time available for proper maintenance of naval ships demand full use of the best management

techniques. The SFOMS provides management techniques for the control of ship's force work during an overhaul The SFOMS also provides the necessary elements for a smooth transition from an operating environment to an industrial maintenance environment.

The commanding officer is directly responsible for the effective accomplishment of all ship's force jobs, and for the management of both human and money resources during the overhaul (availability) so that upon completion of the work, there is a dependable, trained, and responsible crew. At the same time, the ship's company must have the leave and recreation they need. SFOMS provides the tools to help in attaining these goals. The system provides for a staff of shipboard personnel to schedule, manage, and control work to be accomplished by the ship's force by

- identifying work that must be done;
- finding out what work force, materials, and facilities are required and available; and
- developing cost estimates and schedules.

In this way SFOMS helps achieve an effective overhaul; that is, completion of the work at the least cost and in the minimum time without sacrificing quality. However, SFOMS is no longer a required management program; its use is at the discretion of the commanding officer. Further information and guidelines for the use of SFOMS are located in the NAVSHIPINST 5450.180.

Phased Maintenance Program (PMP)

The PMP is a maintenance strategy in which depot level maintenance is performed in a series of short, frequent, phased maintenance availabilities (PMAs) instead of regular overhauls. To the maximum extent practicable, repairs are authorized based on the actual material condition of the ship and its equipment. In addition to innovative material support procedures, PMP contracts enable depot level maintenance to be performed by a single contractor throughout a complete operating cycle. The goals of the PMP are maximum ship availability, improved operational readiness, and upgraded material condition.

Primary Elements of PMP

The primary elements of the phased maintenance program consists of the operating and maintenance schedules, the port engineer, the material support initiatives (prepositioned equipment), the class maintenance plan (CMP), and contracting for PMAs.

OPERATING AND MAINTENANCE SCHEDULES.— Operating and maintenance schedules incorporate PMAs of 2 to 4 months duration at intervals of approximately 15 to 18 months. Minor variations allow for operating cycle differences between classes. One PMA in the cycle is extended by 1 month to include dry docking. PMAs include both repairs and modernization.

PORT ENGINEERS.— Port engineers manage the planning for, monitor the execution of, and evaluate maintenance work on the small number of ships each port is assigned. They carry out these functions through personal observation and direct contact with ship's force, group staffs, NAVSEADET PERA, SUPSHIPs, TYCOM SUPPORT GROUPS, and other planning agencies. Port engineers are primarily concerned with depot level repairs and secondarily with IMAVs. Port engineers are directly responsible to TYCOM staff maintenance officers for planning, for work definition, and for screening recommendations. This includes conducting work definition conferences (WDCs). Through a memorandum of understanding (MOU) between TYCOM and the individual SUPSHIPS, the relationship between SUPSHIP and the port engineer is established, particularly regarding the joint authorization of any growth work by the port engineer and SUPSHIP. (New work may only be authorized by SUPSHIP after TYCOM port engineer concurrence.) Port engineers, however, do not authorize ship alterations.

MATERIAL SUPPORT INITIATIVES.— Material support initiatives for PMP are the use of prepositioned equipment for change-out instead of repair and contingency spares to prevent delays of scheduled PMA completions because of the lack of repair parts. The prepositioned equipment is limited to a small number of major items, and the contingency spares are kept at or near the industrial activity.

Readily available parts in the Navy or Defense Logistics Agency (DLA) supply systems are excluded from contingency spares.

CLASS MAINTENANCE PLAN (CMP).— The class maintenance plan defines anticipated organizational, intermediate, and depot level maintenance requirements for systems and equipments throughout the operating cycle. Except for "legislated" requirements, a CMP task does not imply mandatory accomplishment. The judgment of the port engineer, actual equipment condition, priorities, and risk assessment are part of the repair decision.

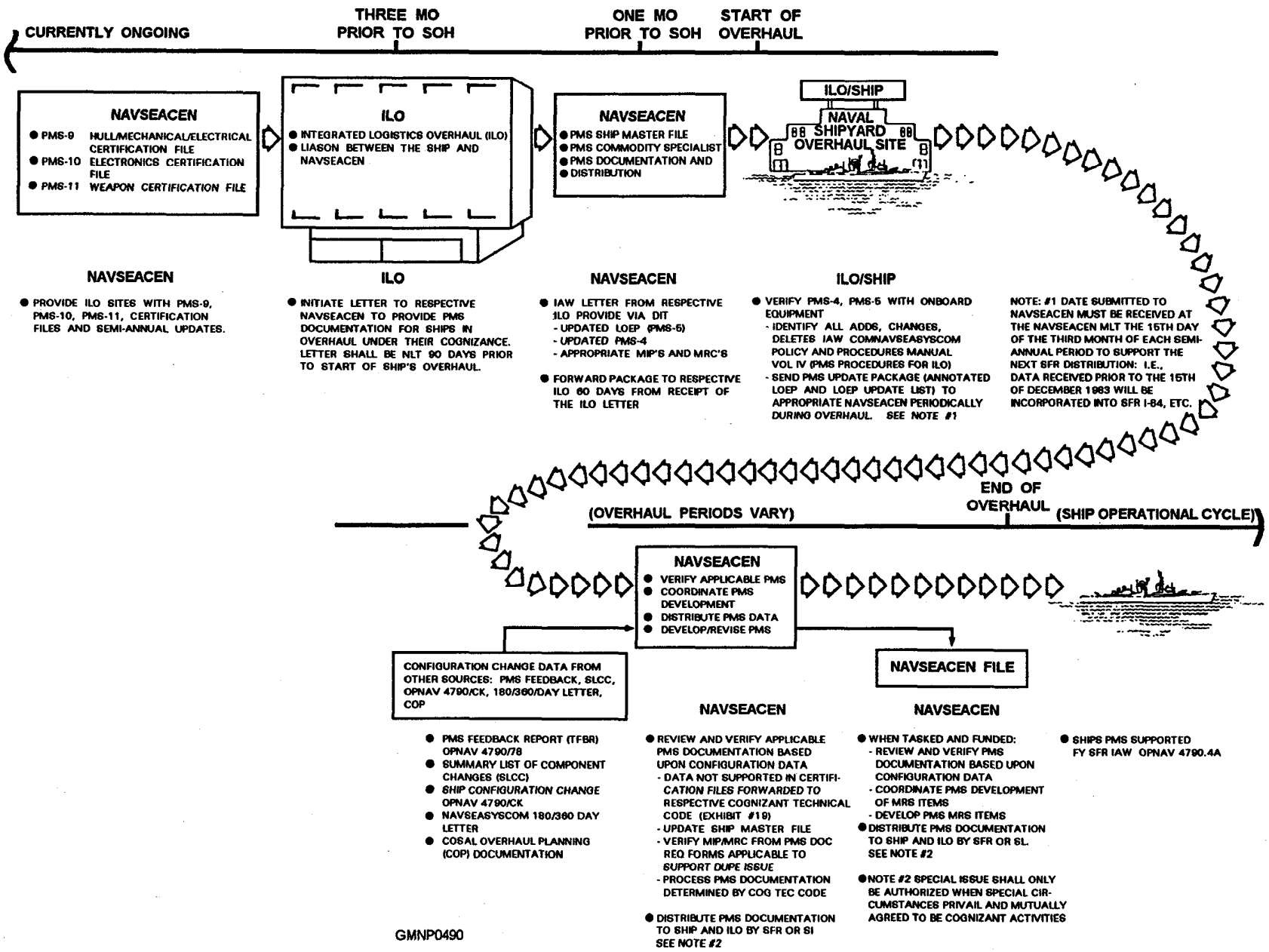

Figure 12-1.—PMS documentation support during overhaul.

CONTRACTING FOR PMAs.— Contracting for PMAs is generally accomplished by the award of an incentive type, multiship/multiyear option contract with a competent contractor, usually in the ship's home port. Although in particular circumstances other types of contracts may be used, the main objectives of this type of contract are as follows:

1. To avoid the requirement to specify an inflexible work list before the availability is negotiated

2. To allow incentive payments for cost control, high quality, and schedule adherence

3. To allow the crew to live in home port during shipyard periods

4. To obtain "learning curve" payoffs in the form of improved efficiency and familiarity for both shipyard and ship's force, resulting in long-term savings in dollars and workdays

Overhaul Maintenance Requirements

During an overhaul period, work that pertains to the repairing, docking, and altering of the ship is done by the shipyard work force. At the same time, however, shipboard equipment is still maintained by ship's force personnel. Although most shipboard equipment is shut down and not in use during an ROH, it still must be kept in the best possible condition of readiness. This is accomplished through the use of Inactive Equipment Maintenance (IEM). At the same time, the shipboard PMS package is going through a constant updating process. The flow of PMS documentation involved during an ROH period is shown in figure 12-1. The Integrated Logistics Overhaul (ILO) concept was developed because of logistic support problems existing in the Supply Operations Assistance Program (SOAP). The ILO program provides more comprehensive PMS documentation and supply support for shipboard equipment, including equipment that may not be affected during an overhaul. NAVSEA is responsible for the development and implementation of the use of the ILO program. Information about ILO-governed PMS procedures is contained in *COMNAVSEASYSCOM Policy and Procedures Manual,* Volume 4, *(PMS Policy and Procedures for ILO),* SL105-AA-PRO-040/IL0.

As you can see, the PMS documentation process for an overhaul period starts long before the overhaul actually begins and proceeds through the ROH and afterwards. Table 12-1 lists the Pre-ROH, during ROH, and Post-ROH actions and responsibilities for a ship to maintain its 3-M program while involved in an overhaul.

Table 12-1.—ROH-Re1ated 3-M Actions

STAGE IN SHIP'S LIFE CYCLE	3-M ACTION TAKEN	WHEN ACCOMPLISHED	WHO ACCOMPLISHES
PRE-REPAIR AND OVERHAUL:	Update CSMP	According to TYCOM ROH Milestones	Ship
	Generate Automated Work Request Package	According to TYCOM/IUC ROH Milestones	ADP Facility or Ship
	Implement IEM	Equipment is Taken Off the Line for Extended Periods	Shipyard or Ship
DURING REPAIR AND OVERHAUL:	Compare and Verify LOEP Provided by NAVSEACEN Against Ship's Configuration Baseline Determined by ILO Team	Throughout Overhaul IAW SL105-AA-PRO-040/ILO	ILO
	Implement IEM	When Equipment is Placed in Extended Inoperative Status	Ship
	Phase-Out IEM Procedures and Commence Normal Operational PMS	Immediately Prior to Each System's Light-Off	Ship
	Update PMS Package	Upon Receipt of SFR Package, Prior to Completion of ROH IAW SL105-AA-PRO-040/ILO	Ship/ILO
	Update CSMP	Continuing	Ship
	Configuration Changes Installed by Ship Reported to ILO	Throughout Overhauls and Availabilities with ILO or LOG REV	Ship
POST REPAIR AND OVERHAUL:	Update CSMP	Immediately Upon Completion of ROH	Ship
	3-M Assist Visit	As Requested by Unit	TYCOM 3-M Team/NAVMASSO's

During an ROH, much of your equipment is naturally going to be removed, partially dismantled, or shut down. However, some equipment must be maintained while inoperative through the use of Inactive Equipment Maintenance. Essentially, IEM provides modified maintenance for equipment that is to be inoperative for extended periods of time. Figure 12-2 shows how a quarterly schedule is modified to include IEM requirements. Shown are two quarterly cycles with IEM beginning in the 23d quarter and ending 4 months later during the 24th quarter. Basically the schedule remains the same, but the changes (as denoted by the circled numbers with arrows) are explained as follows:

1. When making out the new schedule that includes a portion of the ROH, draw red-colored vertical lines on the schedules designating the start and end of the overhaul. Indicate the IEM status of the equipment by entering a II or III. IEM status categories are identified in chapter 6 of OPNAVINST 4790.4.

2. Considerations, such as whether the ship is in dry dock under own-ship's power or air conditioning is available, should be noted as aids in scheduling maintenance requirements in the event that specific services or conditions are necessary to complete the check.

3. Operational PMS should be scheduled as normal up to the beginning of the ROH period.

4. Indicate "YD" with an arrow-tipped line on the MIP line for the equipment that yard personnel or contractors are responsible for.

5. Schedule operational PMS for equipment that will remain operational during the ROH.

6. From the IEM section of the MIP, schedule in green all lay-up and periodic maintenance requirements. Note the scheduling of periodic maintenance of a different periodicity than that specified on the MRC. In this case, for example, the W-2 will only be accomplished monthly as designated by (M) written on the schedule beside the W-2 requirement.

7. Schedule start-up maintenance, and if necessary, operational tests toward the end of the ROH period.

When making the transition into the operational portion of the schedule, do not reschedule requirements that have been accomplished by IEM actions.

Weekly PMS schedules are modified in the same manner as quarterly schedules by drawing a line through the preprinted operational requirements and substituting the IEM requirements.

Guidelines for the proper use and documentation of Inactive Equipment Maintenance are located in chapter 6 of OPNAVINST 4790.4.

LUBRICANTS AND CORROSION CONTROL

LEARNING OBJECTIVES: Discuss the characteristic properties and functions of lubricants. Identify lubrication symbols used on charts and drawings. Explain why corrosion control is an important part of any maintenance program.

If you grew up in a large city, perhaps the only connection you had with lubrication was taking the family car to the garage or the gas station for greasing and an oil change. But, if you grew up on a farm or had a car that you had to keep in running condition yourself, you are well aware of the need for regular lubrication of all moving parts. If your car had a burned out bearing, you learned a lesson that you are likely to remember. Since you have been in the Navy, you have heard a lot about the importance of lubrication. We place additional emphasis on the subject in this section as we describe the different lubricants and lubrication tools that you will encounter. We will also discuss some of the fundamentals and practices involved in corrosion control.

QUALITIES OF LUBRICANTS

Lubricants are of two general classes-oils and greases. Oils are fluids; greases are semisolids at ordinary temperatures. Both have several qualities that determine their suitability for a particular lubrication job. One of the most important is viscosity.

Viscosity is the measure of the internal resistance of a fluid that tends to prevent it from flowing. It varies with the temperature as well as with the nature of the substance. Petroleum jelly can hardly be said to flow at room temperature, but it can be melted to a rather thin liquid. On the other hand, many kinds of oils flow readily at ordinary temperatures but become much thicker when they are cold. A fluid that flows easily has a low viscosity, while a fluid that flows slowly has a high viscosity.

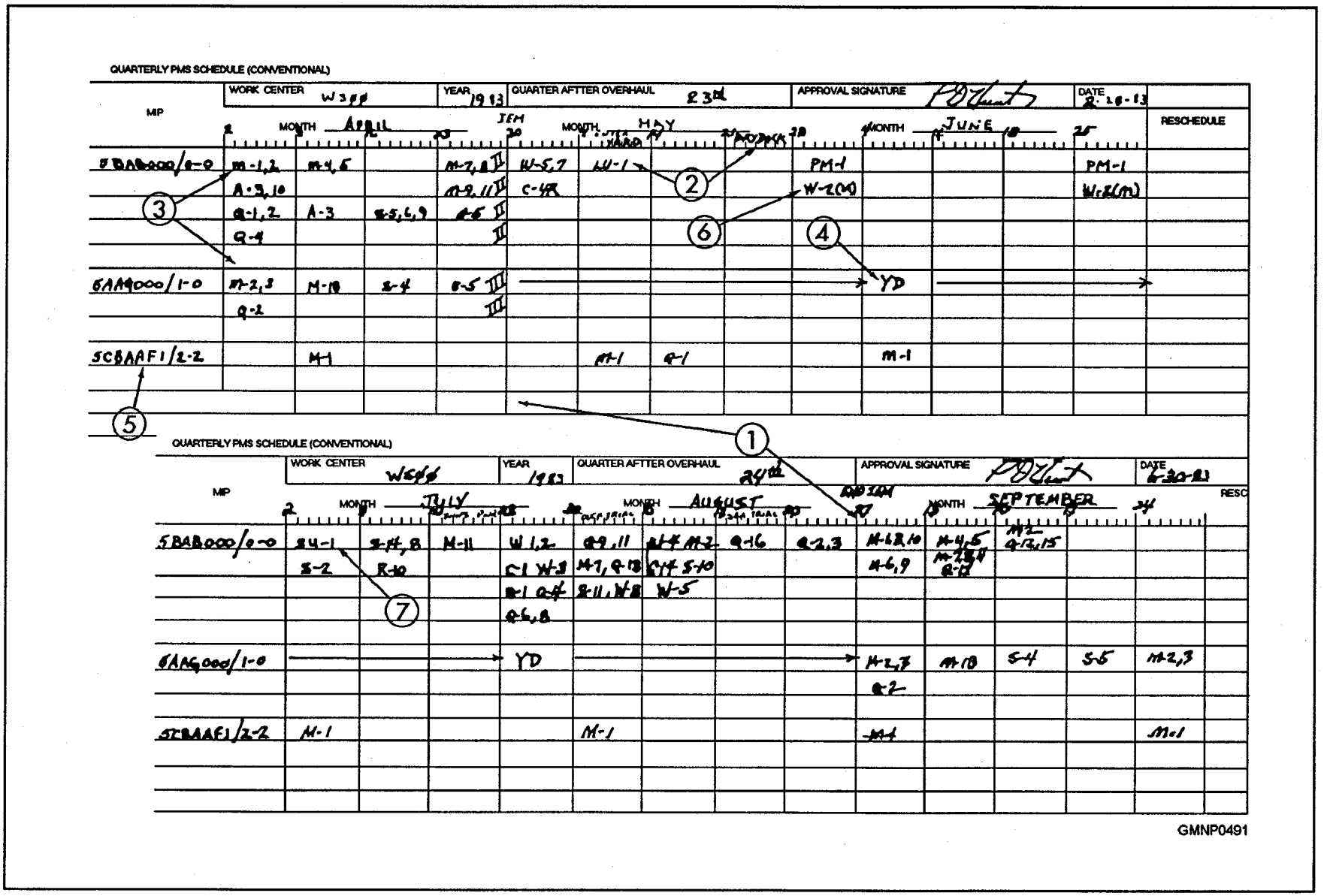

Figure 12-2.—Sample IEM schedule for ROH.

Viscosity is expressed in terms of S.S.U. units. (S.S.U. means Seconds Saybolt Universal and represents the number of seconds it takes a given quantity of the lubricant at a specified temperature to pass through the Saybolt Universal Vicosimeter or Viscometer.) The higher the S.S.U. number of a lubricant at a given temperature, the more viscous the liquid. The Navy uses the S.S.U. measurement, rather than the S.A.E. (Society of Automotive Engineers), grades to designate lubricants.

The viscosity index (VI) is an indication of the variation of viscosity of the lubricant with variation in temperature. The higher the index, the less the viscosity varies with the temperature. Thus a high index is a desirable quality. You want a lubricant that will not solidify and gum up in cold weather nor liquefy and leak away in hot weather.

A viscosity index can be improved up to a point by putting chemical additives into the oil. (Additives are put in by the manufacturer. Do not try to brew up your own special oil by adding anything to it.)

The flash point of a lubricant is the temperature at which it gives off flammable vapors. The fire point (always higher than the flash point) is the temperature at which it will catch fire if ignited and continue to burn. The pour point (of an oil) is the lowest temperature at which it will pour or flow.

Oiliness is the characteristic of an oil that prevents scuffing and wear. You might think this depends on viscosity, but a complicated relationship of many factors is involved. Certain substances have been found that increase the oiliness of a lubricant.

Chemical stability is the ability of the lubricant to "take it." Certain oils and greases tend to deteriorate under the influence of high temperatures, exposure to air or water, or introduction of impurities. A lubricant with good chemical stability will resist such deterioration. You can often detect deterioration by change in color, by formation of varnish or gum deposits, by formation of sludge, by change in viscosity (of oil) or consistency (of grease), by hardening (of grease), or by other telltale signs. Change in viscosity can be more accurately measured by a viscometer, but serious change is easy for the expert to detect.

These signs of deterioration mean that the lubricating and corrosion-preventing qualities of the substances are impaired. You will find it useful to know the signs of deterioration in oils and greases well enough to recognize them should they appear.

Lubricants, preservatives, and hydraulic fluids all protect metal against corrosion, at least to a certain extent. Corrosion prevention is, of course, the main function of a preservative. The corrosion-resisting qualities of lubricants and hydraulic fluids can be improved by adding chemicals, called inhibitors. In general, inhibitors are added to the substance by the manufacturer before delivery to the Navy.

Other qualities or properties of lubricants are the dropping point, the penetration, the neutralization number, the work factor, the viscosity change, and the aniline point. Chemists working with lubrications need to understand the meaning of these terms; we list them only to impress upon you that not just any oil will do.

FUNCTIONS OF LUBRICANTS

Lubricants are used for three purposes-to reduce friction, to prevent wear, and as a protective cover against corrosion. As a protective cover against corrosion, the use is obvious. As a preventive against wear, the use is equally obvious when you consider the matter of friction. Lubricants form a layer or film between the metal surfaces that actually keeps the metals from touching. The moving parts literally ride on the lubricant. In the instance of two metal surfaces sliding across each other where space cannot be provided for ball bearings, the lubricants themselves serve as liquid bearings. In all mechanical devices, lubrication is necessary to counteract fiction as much as possible. The presence of only a thin film of lubricant separating metal surfaces keeps machinery running. If the film disappears, you have hotboxes, burned-out and frozen bearings, scored cylinder walls, leaky packings, and a host of other troubles-the least of them being excessive wear. All of these troubles are the result of direct metal-to-metal contact without adequate lubricant.

Specifications

Because proper lubrication is an absolute necessity, selection of high-quality lubricants having the right viscosity and other properties for each job is of vital importance. When you drive your car into the local falling station and tell the attendant, "One quart of 10W30 oil," you are specifying the kind of oil you want.

Most lubricants, hydraulic fluids, cleaners, coolants, and related materials used by the Navy are purchased under federal or military (MIL) specifications. These specifications supersede all specifications formerly issued by the Navy. Table 2-3 in NAVSEA OD 3000, *Lubrication of Ordnance Equipment*, cross-indexes superseded Navy

specifications and designations with the current federal or MIL specifications.

The specifications are identified by names, numbers, and letters. Lubricants, preservatives, hydraulic fluids, and many other items are often known and referred to by these specification numbers and symbols alone. An example of an item you have probably already used is MIL-F-17111—a power transmission fluid.

Oils

Many oils used by the Navy in ordnance equipment are identified by four-digit symbols preceded by the letters MS (military symbols). You need to be able to read and translate these symbols.

The following classes of MS oils are approved for use in naval ordnance:

Class 1 – Aircraft engine oils

Class 2 – General-purpose lubricating oils (130°F)

Class 3 – General-purpose lubricating oils (210°F)

Class 5 – Mineral cylinder oils

The viscosity for oils of classes 1, 3, and 5 is determined at a temperature of 210°F and for oil of class 2 at 130°F. These classes are straight petroleum-based oils without corrosion inhibitors.

Now, assume the MS on a certain oil is 2135. What does this tell you about this oil?

The first digit tells you that the oil is class 2, a general-purpose lubricating oil. The last three digits indicate the viscosity as 135 at a temperature of 130°F. That is how you read military symbols for oils.

On lubrication charts, note that the number of the lubricant to be used at each place is not repeated, but a "target" symbol is used instead. This avoids confusion with the number used to identify the part to be lubricated, which may be used several times in the chart. The meaning of the target symbol is explained in the notes on the chart, as well as in OD 3000.

Greases

Lubricating greases are a mixture of soaps—commonly, calcium or sodium soap—and lubricating oil. The oil may be a mineral oil (petroleum-based) or a synthetic oil.

The purpose of the soap is to make the oil stay put at the point of application. The soap traps the oil within its mass, but the actual lubrication is done largely by the oil in the grease. You might think of it as an oil-soaked sponge. The heat of friction squeezes the sponge, melting the grease and releasing the oil to perform the lubrication.

Greases are classified according to the kind of soap used in making them. Each kind of soap has specific properties.

Calcium (lime) soap grease will not absorb moisture or emulsify (separate into its original ingredients). Consequently, it is specified for general lubricating purposes where bearings are exposed. However, calcium soap grease has a low-melting point and is not suitable for hot-running bearings.

Sodium-soap grease emulsifies in the presence of moisture but has a higher melting point. It should be protected from moisture. It is used for ball and roller bearings.

Other kinds of soap bases used in greases are aluminum soap and lithium soap, with others added to the list through experimentation and test at laboratories.

Graphite grease, as the name implies, contains graphite. The graphite acts as a mild abrasive to smooth roughened wearing surfaces, as a filler to smooth over any pits in the surfaces, and as a friction reducer. However, because of its abrasive action, graphite grease should not be used in bearings that are in first-class condition, except under high temperatures when ordinary greases would be destroyed. Technically, since graphite grease contains no soap, it is classed as a lubricant oil, but it looks and is applied like other greases.

Gear lubricants are a mixture of high-viscosity oils and just enough sodium soap to cause jellying. Gear lubricants are suitable for high gear tooth pressure and moderate speeds where the design of the case is such that ordinary oil cannot be retained.

As with oils, the viscosity of greases varies with temperature. If temperature changes make it necessary to change oil, check your lubrication chart to find out whether you have to change the grease too.

LUBRICATING TOOLS

Some lubricants are applied by smearing them on the surfaces to be lubricated. You will most often use a tool (grease gun, oiler, or grease pump) especially designed to put the lubricant into the equipment through a lubrication fitting.

Grease Guns

Grease is applied by a grease gun, or pump, through a nozzle that is designed to match the fitting. Although

ordnance plants and repair shops have electrically or pneumatically powered equipment, you probably will have to depend on your own right arm for power to operate the lubricating equipment. Therefore, in this section we will discuss only the hand-powered lubricating equipment you are likely to use.

Hand-operated grease guns are of two types, depending on how they are loaded. To load one style, you remove a cap that comes off with the handle and stem (fig. 12-3) and fill the body with grease, using a paddle or spatula. As you might expect, this method of loading can be messy; it also exposes the lubricant to dirt and moisture. A faster and cleaner kind of gun (fig. 12-3, view A) is loaded by removing the cap nut from the end of the hollow handle and forcing grease in through the handle with a handgun loader (fig. 12-4, view A) or a bucket type of lubricant pump (fig. 12-4, view B).

The handgun loader is a 25-pound container equipped with a hand-operated pump and a fitting that mates with the opening in the handle of the grease gun. The bucket type of lubricant pump makes use of loader

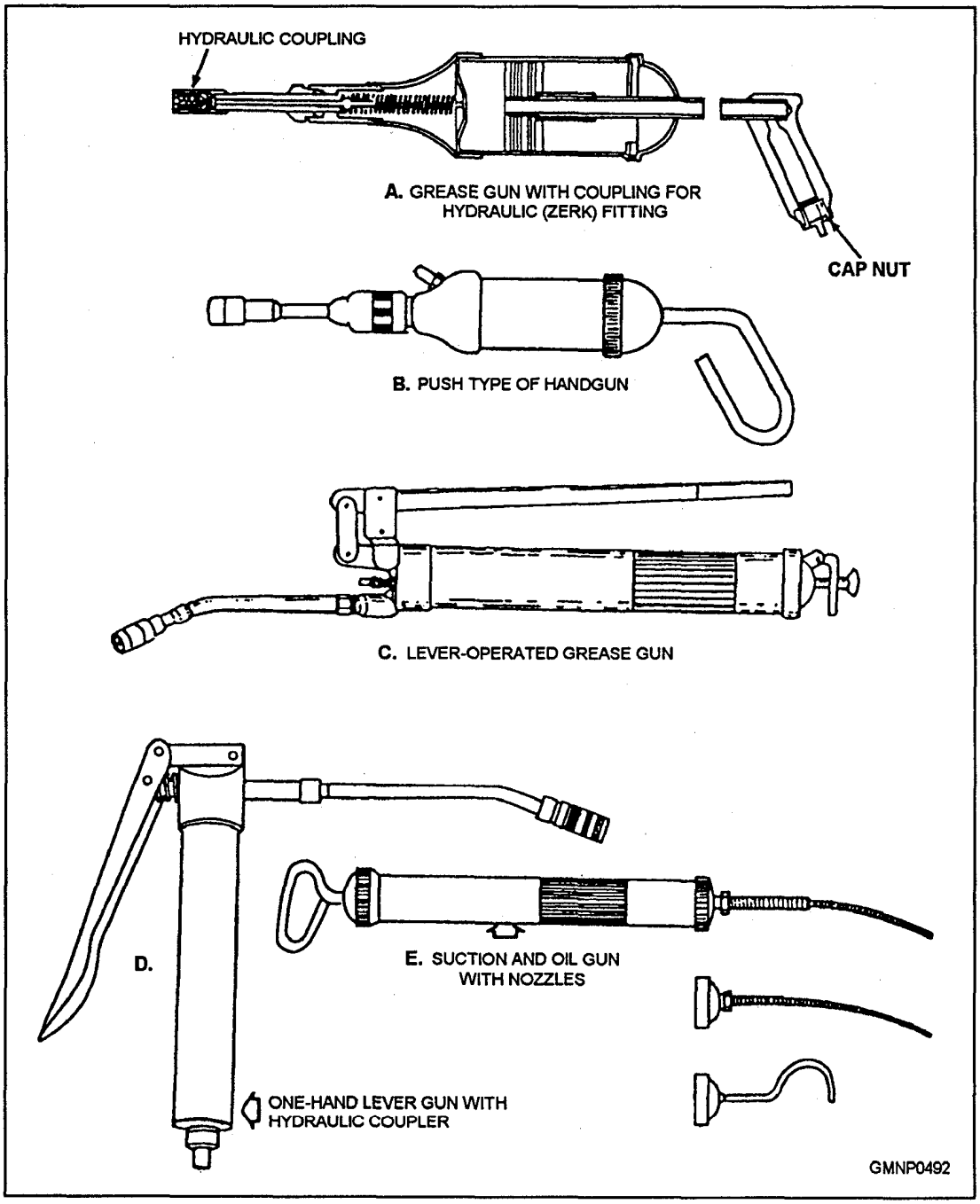

Figure 12-3.—Hand-operated grease guns.

adapter and loader valve when it is used for loading a grease gun. One pound of lubricant is delivered with every seven full strokes of the pump. The loader will deliver lubricant only when the grease gun is placed on the loader valve. The job is much less messy with the loader, and it protects the lubricant against contamination. Besides, you do not have to run back to the storeroom to refill your gun.

Different nozzles can be attached to the grease gun for different types of fittings. The lubricant pump has various couplers and adapters that attach to the hose, allowing the pump to be used on different fittings.

A grease gun can be used for oil if the point to be lubricated has the proper fittings, or an oil gun (fig. 12-3, view E) maybe used.

A lever type of grease gun (fig. 12-3, views C and D) is being introduced; it gives more positive lubrication than the push type (Zerk) of grease gun.

When you need to apply large quantities of grease-as, for example, in a gun mount roller path-a grease gun is too small. The bucket type of hand-operated lubricant pump (fig. 12-4, view B) holds the same amount of grease as the handgun loader and is fitted with a pump operated with a lever. It has a 10-foot hose with a hydraulic T-handle adapter and a 90-degree adapter for working in cramped spaces. With this pump you can build up a lubricant pressure of 3,500 psi and deliver a pound of lubricant every 20 full strokes.

The hand-operated lubricant pump can handle any type of lubricant generally required on naval ordnance equipment except greases of the calcium soap type.

If you can arrange it, use several grease guns-one for each type of lubricant you will need. You can save time by taking care of all the fittings requiring a specific type of lubricant before going on to apply the next type. For example, if you are working on a 5”/54 mount, take care of all the fittings around the gunhouse that require MIL-G-81322 before working on those that take MIL-L-18486. After you have finished with the gun, rammer, hoist upper end, and soon, repeat the sequence of application down in the handling room.

Fittings

Grease fittings are of several types—hydraulic (unofficially called the Zerk fitting, after

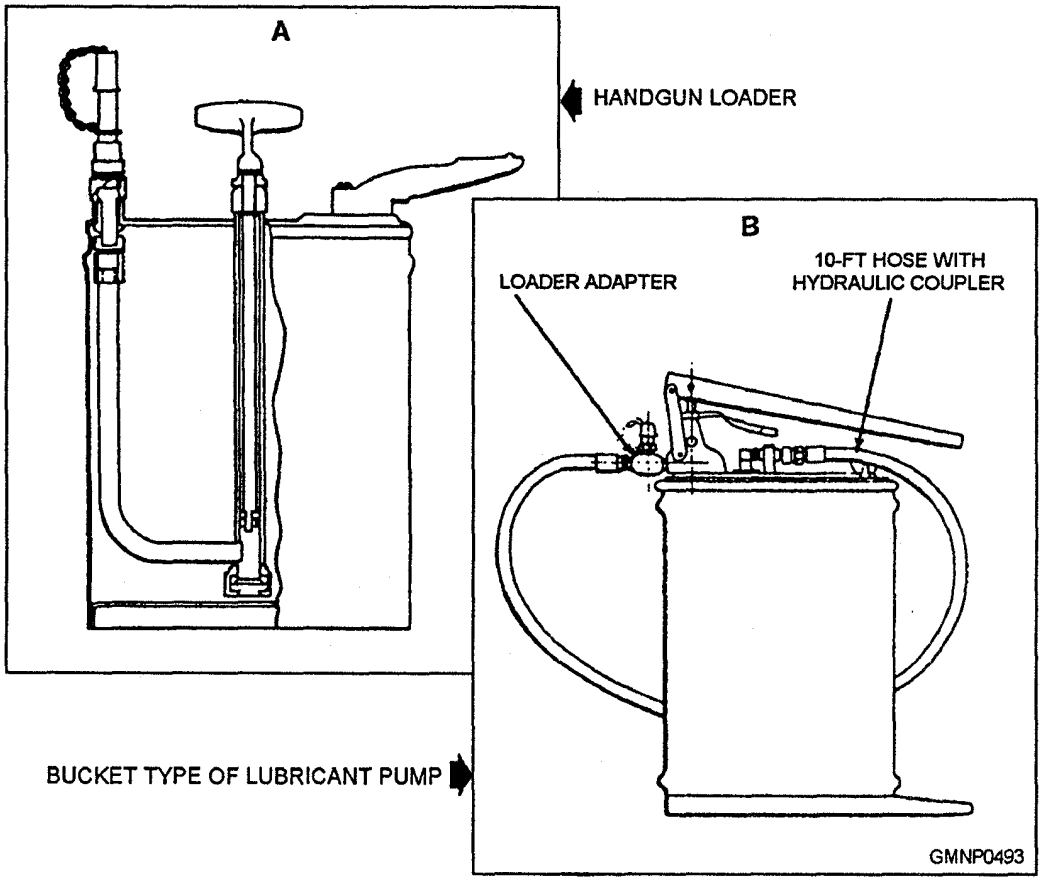

Figure 12-4.—Hand-operated grease pumps: A. Handgun loader; B. Bucket type of lubricant pump.

its inventor), button-head, pin-head, and flush (fig. 12-5).

The hydraulic fitting protrudes from the surface into which it is screwed and has a specially shaped rounded end that the mating nozzle can grip. A spring-loaded ball acts as a check valve. The nozzle will not slip off the fitting during lubrication but can be easily disengaged by a quick forward-backward movement. Figure 12-5, view A, shows a cross-sectional view of a straight hydraulic fitting, and view C shows hydraulic fittings made for different angles. They are made to fit almost any angle and have different threads and body lengths. When using a gun equipped with a nozzle for hydraulic type of fittings, just place the nozzle on the fitting and push forward on the handle. This slips the nozzle onto the fitting and, at the same time, builds up hydraulic pressure in the gun, forcing the grease out of the nozzle. Then relax the pressure. A spring forces the handle back, ready for the next stroke. Three strokes are usually enough. Only one hand is needed to work this type of gun. The grip action of the nozzle coupler holds the nozzle firmly to the fitting until it is pulled free. Hydraulic fittings are being replaced by commercial button-head and pin-head fittings (fig. 12-5, views D and E) that provide more positive connection with the grease gun. The grease gun can be used with the button-head fitting by adding an adapter.

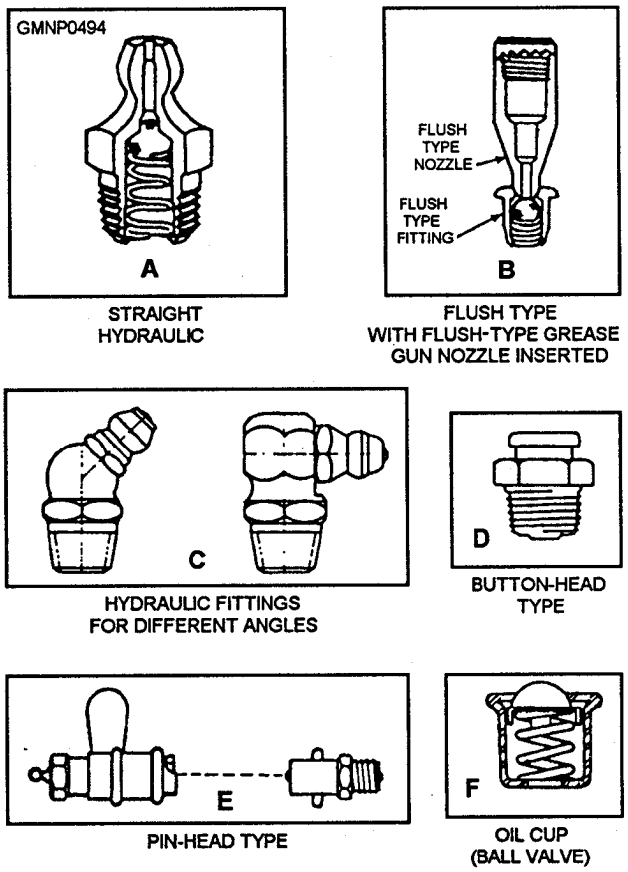

Figure 12-5.—Lubrication fittings.

The flush fitting (fig. 12-5, view B) is flush with (or below) the surface into which it is set so that it will not foul moving parts. It is also used where there is not sufficient clearance to install protruding fittings. The flush fitting also has a ball type of check valve. When pumping lubricant using a gun equipped for the flush type of fittings, you must exert a steady pressure against the grease-gun nozzle to keep it in contact with the flush fitting, since the nozzle has no grip on the fitting. Otherwise, the method of use is much the same as with hydraulic fittings.

The oil cup with the ball valve (fig. 12-5, view F) is the most popular type for oil fittings.

As with other routine jobs, it helps to have a standard operating procedure that you can follow. Here is one that will be helpful:

1. First, consult the lubrication chart and locate the fitting.

2. Clean the fitting carefully with a lint-free cloth.

3. Apply the correct amount of the specified lubricant. (Be careful of the amount you apply-too much will cause excessive heat in the bearing and strain the grease retainers, while too little is on a par with too late.)

4. Wipe all excess grease from around the fitting.

5. Check off the fitting on your chart. A fitting must not be missed just because it is battered or frozen. A frozen fitting could mean that the lubricant holes throughout the bearing are clogged. This means tearing down the bearing and cleaning all parts carefully. Grease that fitting even if it requires an hour of extra work. This is where a little extra tenacity can pay big dividends later by preventing a major casualty. Plastic protective caps are often provided for fittings. These caps keep out contaminants and also aid in keeping the grease in the fitting.

LUBRICATION CHARTS

Frequent reference has been made to the lubrication charts. They are published in the OPs for older ordnance equipment and on MRCs for all ordnance equipment. These charts are necessary to do your maintenance job properly. Copies of some charts maybe obtained for use as checkoff lists. A sample chart is reproduced in figure 12-6. On it, you can seethe use of target symbols (Nos. 1 and 2) and schedules for lubrication. Large

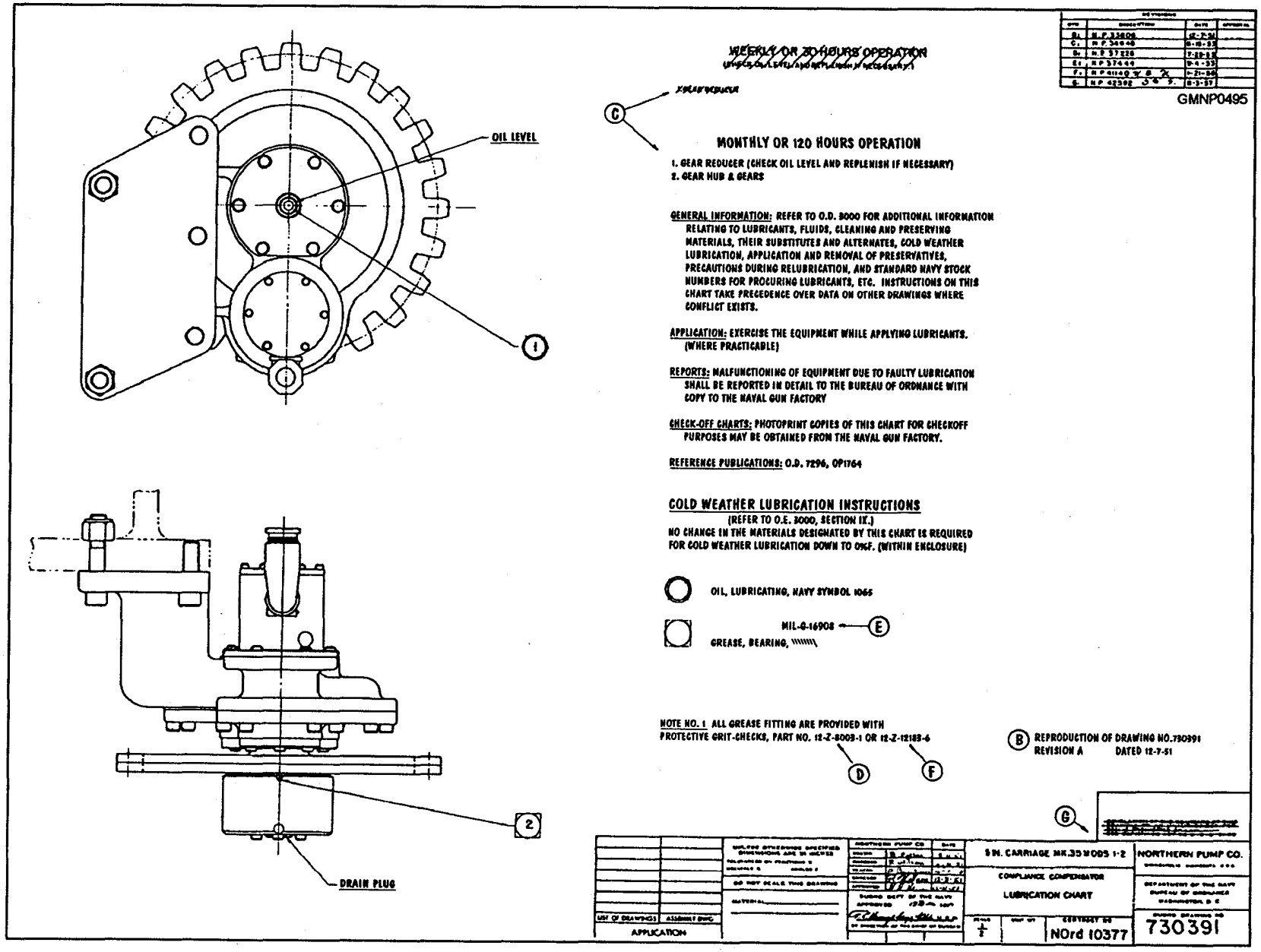

Figure 12-6.—A sample lubrication chart.

equipments have several charts or MRCs with numerous places indicated for oiling or greasing. It would be easy to forget some places or to use the wrong lubricant if you did not have the chart or MRC to guide you and to check off as you work.

Lubrication Symbols

On lubrication charts and MRCs, lubricants and hydraulic fluids are identified by symbols, each symbol signifying a specific oil or grease. Examples are shown in figure 12-6. The symbols are identified in OD 3000.

Alternates and Substitutes

If the lubricant prescribed in the OP or MRC for a piece of equipment is not available, you may find it necessary to use either a substitute or an alternate lubricant.

A substitute lubricant is one that will fill the need for a limited time but does not have all the essential properties of the prescribed lubricant. As soon as the prescribed lubricant becomes available, all of the substitute must be removed, and the equipment must be completely relubricated with the prescribed material.

An alternate lubricant is one whose characteristics closely resemble those of the prescribed lubricant so that its removal is not necessary when the prescribed material is available.

Alternates and substitutes for prescribed Lubricants (as well as for cleaning materials, hydraulic oils, and preservatives) are listed in OD 3000. If none of the alternate lubricants are available, you must choose a substitute. Keep in mind that the substitute should be as near as possible to the specified lubricant in lubricating and rust-preventive qualities, viscosity, and ability to withstand the temperature ranges of the equipment. In brief, when the prescribed lubricant is not available, *use an* alternate if you can, a substitute if you must.

STOWAGE OF LUBRICANTS

Lubricants and related materials may bestowed for long periods before use. Although they are relatively stable, they are not inert, and proper stowage methods are important.

Many factors contribute to the deterioration of materials in stowage. The nature of their constituents makes them more or less susceptible to chemical and physical changes. These changes are accelerated by elevated temperatures, humidity, exposure, and the presence of certain catalysts. The principal physical changes are separation and contamination,

Oxidation is the most common chemical reaction in stowed materials. It occurs when the material is exposed to air, particularly moist air, and is accelerated by high temperatures and the presence of certain catalysts. Materials containing soluble additives may deteriorate by decomposition or precipitation of the additive. These and other chemical changes can produce such harmful substances as acids, gases, water, insoluble gum, and sludge. Animal and vegetable oils are generally more susceptible to chemical change than mineral oils.

Physical changes include separation of oils from the soap component in greases and separation of insoluble additives from the parent material in oils. These changes may not be as serious as chemical changes, since a thorough mixing may restore the material to a usable state.

Rain, melted snow, and water vapor in the atmosphere can contaminate materials that are exposed or improperly sealed. Water vapor trapped in the container before sealing can condense when the ambient temperature drops.

Generally, containers used to package materials supplied under specification requirements are suitable for stowage purposes. The effects of overheating, insufficient ventilation, and proximity to dangerous materials must be considered when handling and stowing lubricants and related materials. Good housekeeping in handling and stowage areas should be stressed at all times.

Containers, when stowed, should be handled carefully to avoid breakage. If they are stacked, overloading of the lower ones should be avoided, as this may open seams and permit loss of material. To prevent accumulation of water in their upper ends, you should stow drums on their sides. Lubricants and related materials should be segregated from explosives and other dangerous materials.

Before containers are stowed, they should be inspected for corrosion, leakage, and complete closure of all plugs, caps, and covers. All corrosion should be removed and the affected areas repainted.

During stowage, containers should be inspected frequently for leakage and corrosion. If tests indicate that the contents of leaking containers are in satisfactory condition, the materials should be transferred

immediately to serviceable containers. The leaky containers should be removed and destroyed.

Stowage areas should be inspected for adequate drainage, foundations, and properly placed under undamaged tarpaulins. Any deficiency found during inspection should be corrected immediately.

Vapors from oils, greases, solvents, and similar products are flammable. When the vapors are combined with air in certain concentrations, they may form explosive mixtures that can be ignited easily by a spark, an open flame, or a lighted cigarette. To prevent accumulation of flammable vapors, you must ventilate stowage areas properly. To safeguard against fire and explosion, you should display warning signs prominently. Keep oil-fire extinguishing equipment available, and keep interiors of stacks open to permit entry of fire-fighting equipment. Only spark-enclosed forklift trucks should be used.

Flammable materials, such as oils, greases, and solvents, packed in metal containers or overpacked in fiberboard or wood boxes, are best protected when stowed in prescribed areas. Your ship should have an authorized stowage area for lubricants and other flammable materials. You may find it tempting to stow your often used grease gun and oil can in or near the gun mount. This is a dangerous practice and should be avoided. A temperature range of 40°F to 80°F is the most desirable for stowage.

Vapors from lubricants and related materials may frequently have a toxic effect on the human system. Every precaution should be taken to prevent excessive concentrations of such vapors in the air.

The following safety precautions should be observed when you are working with materials that have toxic effects:

1. Provide sufficient mechanical ventilation to reduce the concentration of toxic fumes to a safe level. When possible, ventilation should include an exhaust for fumes as well as intake for fresh air.

2. When a safe level of ventilation is doubtful, workers in the compartment should wear an air line respirator provided with a pure air supply.

3. Personnel working in a compartment where fumes may be above a safe toxic level should always work in pairs so that one person remains outside the compartment as a safety watch at all times. The person outside should have a respirator in case it is necessary to enter the compartment to bring out someone who has been overcome by toxic fumes.

In addition to the use and stowage of lubricants, new regulations are in effect that prescribe how lubricants are to be disposed. This includes oil- and grease-soaked rags. Your ship will have an instruction that details the disposal of these materials. As a petty officer, you must see that the regulations are observed by your personnel.

CORROSION CONTROL

Every member of the crew is expected to maintain his otherliving spaces. Therefore, besides the technical maintenance details on your gear, you will also be responsible for cleaning, painting, and similar housekeeping work. It is the duty of the division officer to supervise the maintenance, the preservation, and the cleanliness of all spaces and equipment assigned to the division, but the actual tasks are usually assigned by the division LPO (this maybe a PO3 or PO2). That means you have to know how to do the work and be able to teach others. *Basic Military Requirements*, NAVEDTRA 12043, chapter 17, describes general housekeeping preservation, procedures, and requirements.

As a GM, most of your cleaning and preserving work will be done on metal surfaces, principally steel. The preservatives must protect the metal against rust and corrosion; the cleaning materials must clean the surface before the preservative is applied.

Rust is caused by the slow burning (oxidation) of iron. When iron or steel rusts, it combines slowly with the oxygen in the air.

Technically, corrosion is not exactly the same as rust since its meaning includes metal being eaten away by acid or by the action of salt water or other substances. Rust and corrosion are dangerous and destructive saboteurs that attack unguarded metal at the slightest opportunity.

The way to protect metal from rust and corrosion is to protect it from the air. Paint is a good protective, but many metal surfaces, such as moving parts, cannot be painted.

The lubricants used on moving parts serve as rust preventives to some extent, but often this protection is not enough. These are temporary preservatives for protecting metal from water and weather. Light oils and greases are applied to exposed gun parts and mounts as temporary protection against corrosion. Bright steelwork, such as exposed cam and linkage surfaces, should have such protection. Slushing oils, available in several grades, are provided for this purpose. All old oil

and dirt should be cleaned from the part and the surface thoroughly dried before new oil is applied.

Authorized Cleaning and Preserving Materials

Some lubricants (preservative lubricating oil for use in small arms and light machine guns) have preservative additives (rust inhibitors) and can serve for short-term preservation, but no preservative is intended for use as a lubricant.

When lubrication is not desired, there are special preservatives (permanent type) that may be brushed or sprayed on the surface to be protected. Small parts of a mechanism may be dipped. After treatment, the preserved mechanism can be stowed for a long period. (The length of time depends on the characteristics of the preservative, the kind of stowage, and so forth.)

A rust preventive that can be used either to protect exterior surfaces or (as when pumped through a hydraulic system) for preserving interior surfaces, tubes, and so on, is the thin-film compound, MIL-C-16173, that is available in several grades. A hard-film compound is available for metal exterior surfaces only.

Rust preventives are not lubricants and should not be used instead of lubricants. Before treating metal surfaces with rust preventives, be sure to remove all traces of rust and corrosion and all the old lubricant.

Be sure to remove all of the rust preventive before adding lubricant to ordnance equipment that has been stowed with rust-preventive compound coating. OP 1208, *Instructions for Inactivation, Maintenance and Activation of Ordnance in Vessels in Inactive Status,* gives step-by-step instructions for removing preservatives from gun mounts and other ordnance equipment. Chapter 5 of OD 3000, *Lubrication of Ordnance Equipment,* deals with cleaners and preservatives. It contains a chart of all of the cleaning and preserving materials authorized for use on ordnance materials. This chart gives the specification number, characteristics, applications, national stock number, container size, and substitutes, while the text elaborates on the use of each item. Some of the materials will be described very briefly in the following pages.

Dry-cleaning solvent P-D-680 (Varsol or Stoddard solvent) is useful for cleaning away old grease, oil, and rust preventives. However, it is hard on rubber (use soap and water on that). Because of its irritating, flammable fumes, it should be used only where there is plenty of ventilation and where there are fire extinguishers handy. Diesel fuel or kerosene can also be used for the same purposes as dry-cleaning solvent. The correct solvent must be used since some solvents leave a residue or cause corrosion. Therefore, always check the OP for the equipment.

Spraying or splashing of the solvent must be avoided during cleaning. If the solvent were to fall upon a bearing surface, it would cut or render the lubricant less effective, causing excessive wear. After the solvent has been used, the parts must always be wiped dry with a clean, lint-free cloth.

Removing Rust

When using abrasives to remove rust, be careful to select the proper type (see OD 3000) and use it sparingly.

Never use abrasives without permission from the proper authority. Only experienced personnel may use abrasives or wire brushing. Carelessly used abrasives can do more damage than rust. A few strokes of even a fine abrasive could destroy the accuracy of many close-fitting parts that are machined to close tolerances and could lead to costly replacements. Always be extremely careful to keep grit from getting into bearings or between sliding surfaces.

After the rust has been removed, the parts must be thoroughly cleaned and dried. Avoid leaving your fingerprints on the metal. Cleaned surfaces should not be touched by bare hands before the rust preventive is finally applied. When the surface is clean and dry, you are ready to start applying paint or a preservative.

Painting Pointers

Painting is one of your important maintenance jobs. Instructions for using the chipping hammer in preparing metal surfaces for painting are outlined in Use *and Care of Hand Tools and Measuring Tools,* NAVEDTRA 12085.

Except for special applications like camouflage, the primary purpose of painting in the Navy is for preservation, rather than decoration. You do not paint just for the sake of appearance nor as a substitute for cleaning. When you do paint, you should do a thorough and neat job. “Thorough means that you cover every square inch of the surface to be painted, and “neat” means that you keep paint off places where it does not belong. You have learned from past experience that it is much better and easier to keep the paint off the places where it should not be than to clean it off later. Always keep paint off gaskets, brightwork, grease fittings, rubber parts and rubber-covered wires, electrical leads

and contacts not protected by armor or conduits, instruction or data plates, and working parts of surfaces that are normally supposed to be protected by a coat of lubricant.

The first thing to do when you are given a painting job is to remove the old paint, which you have been taught to do properly. The paint stripping solution recommended in OD 3000 is 8 ounces of sodium hydroxide (O-S-598 Type 1) in 1 gallon of near-boiling water. Rinse it with clean, hot water after the paint is removed. O-S-598 should not be used on aluminum, zinc, tin, terneplate, or lead.

Before applying paint, be sure the surface is clean and dry. Paint will not adhere to damp or oily surfaces or to surfaces covered with dirt, rust, or solvent. Galvanized surfaces must be wiped with ammonia, vinegar, or a special priming solution called wash primer before the paint will adhere. Brush the solution on, allow it to dry, and then wipe it off. Never use an abrasive on galvanized surfaces.

Soap and water are one answer to the problem of removing all dirt and traces of old oil or grease from metal surfaces to be treated with rust preventives, paint, or other preservatives. Wash away all soap, then see that the surfaces are dry; and, finally, apply rust preventives (or paint) without delay. It is sometimes hard to get at pockets or cavities where water collects; be sure they are not neglected.

The standard finish for United States naval ship superstructures is a gray paint; the exact color and composition are prescribed by NAVSEA. You will also use gray paint for the exterior of gun mounts.

A prescribed gray-blue paint is used for exterior steel decks. Interior bulkheads and overheads are painted with a white paint prescribed by NAVSEA, and interior steel decks are usually finished with gray deck paint, although white is prescribed for decks in ammunition spaces. These are the general rules for painting; you will receive details on painting jobs from your leading GM.

BARREL MAINTENANCE

LEARNING OBJECTIVES: Describe the required care and maintenance of naval gun barrels and the purpose of using the proper tools, gauges, and inspection instruments.

Every gun used in the Navy has a bore and chamber. Taking care of them is one of the first duties of the Gunner's Mate.

Care of the bore and chamber is no once-a-year or once-a-month matter. They must be cleaned, dried, and inspected before firing. They must be cleaned, inspected, and oiled weekly. They must be gauged periodically, and the bore must be decoppered when necessary. Maintenance of the bore and chamber is an important job-not ordinarily a very dificult one, but one that must be done properly and at the prescribed times.

Frequent reference has been made throughout the manual of the need for keeping your guns cleaned and lubricated. This has been done for a purpose-the need to emphasize the importance of your job in keeping your equipment "fire-ready."

TOOLS USED

With the exception of one or two small-arms weapons for which maintenance tools are usually issued separately, every naval gun is equipped with certain basic maintenance tools and accessories. Larger guns and mounts are, of course, equipped with more elaborate sets of tools, but all sets include, as a minimum, the implements that are required for care of the bore and chamber.

Cleaning Gear

The bore and chamber maintenance tools and accessories issued for the 5"/54 are typical of such implements. The wire bore brush (with the sectional handle), the bristle sponge, and the lapping head are the basic cleaning instruments.

The sectional handle is a wooden rod with couplings at both ends that can be fitted either to similar couplings on other sections or to bore maintenance tools, like lapping heads and gauges. In the 5"/54 set, there are several of these sections supplied so that, by joining one to the other, you can make a pole of any appropriate length for the job at hand. The number of sections supplied with any gun makes any part of the bore accessible.

The bristle sponge is a cylindrical brush used for cleaning the bore and chamber. It fits onto the end of the sectional handle. When stowed, it is covered with a canvas protecting cap.

The lapping head is a cylindrical block on which can be mounted four removable spring-loaded segments. It is intended for removing relatively slight constrictions in the bore. In stubborn cases, you will need to use the wire bore brush. Its stiff steel wire bristles are effective in all but the very worst cases.

The tompion is used to keep dirt out of the gun bore and chamber. It is not used when there is a likelihood of condensation forming in the barrel with the muzzle plugged. It is also not used in wartime when there might not be time to remove it before firing. Sometimes plastic or canvas covers are used over the muzzle; the guns can fire through them if necessary (unless heavily ice-coated or if supersensitive nose fuses are used).

Gauges

The bore plug gauge is a metal cylinder accurately machined so that it just passes through the bore when the gun is new. After the gun has been put to active use, constrictions may develop in the gun bore. The bore plug gauge is used to locate these constrictions. On guns of 5 inches or smaller, the bore plug gauge fits onto the end of a section handle in the same manner as the previously covered accessories or is attached to a line and pulled through the bore.

The bore erosion gauge is used in the gun barrel to measure the amount of erosion of the metal caused by firing.

NOTE: The Mk 9 Mod 0 projectile seating distance (PSD) gauge was developed to repIace the 5" Mk 2 bore erosion gauge for estimating velocity losses and percent-expended conditions in all 5"/54 gun barrels.

The PSD gauge is similar in construction to the old Mk 2 bore erosion gauge. The major difference is that the PSD gauge measures the seating location of the projectile, rather than the wear near the origin of the bore. For instructions and use of the Mk 9 Mod 0 PSD gauge, see OP 1549, NAVSEAINST 8300. 1, and MRCs.

Inspection Instruments

Visual inspection of the bore and chamber precedes and folIows cleaning operations. Alight, of course, is very helpful in finding inadequately cleaned areas, pitted areas, rust or corrosion, deformed lands or rifling grooves, cracks, or other deviations. A bore searcher is used on 20 mm and larger guns. Look for corrosion at the muzzle end caused by salt spray.

If the chromium plating in the chamber of the bore appears pitted, the combat systems officer will decide if it is bad enough to need replating.

PREPARATION FOR FIRING

To prepare the gun for firing, you must inspect and clean the bore and chamber. Removal of the lubricant and the muzzle cover, or tompion, is but one of the operations in the preparation for firing.

Removing the muzzle cover, or tompion, is easy. To clean out the bore, however, you must wipe away the lubricant coating. In small arms, as you remember, this is done with a cleaning rod and a patch. In larger guns, you use the sectional handle instead of a cleaning rod and clean toweling wrapped around the bristle sponge in place of the patch. But the idea is exactly the same.

These instructions apply to guns that have been in use and were given afterfiring care when last used If you are preparing a gun barrel that has been taken from stowage or if it is a new one, you have much more work to do. The preservative used on new or stowed barrels must be removed with dry-cleaning solvent. When all the preservative has been removed, the solvent must be wiped out of the gun.

CAUTION

Observe ventilation and fire precaution rules when using dry-cleaning solvents. Remember also that solvents are drying and irritating to the skin and destructive to rubber and insulation.

AFTERFIRING CARE

Afterfiring care is more elaborate than prefiring care. Every time a gun is fired, something besides the cartridge case is left behind. Deposits of corrosive salts (powder fouling) are left on the interior of the bore and the chamber. As the rifling cuts into the projectile rotating band, some of the metal of the rotating band is left behind as a deposit of copper in the bore (metal fouling or copper fouling). Both kinds of deposits are harmful and must be removed.

Standard maintenance procedure (postfiring maintenance) is to remove the dirt and powder foulings by washing out the bore and chamber with a Break-Free solution (CLP#7) that cleans, lubricates, and preserves in one application. The gun is then secured until the next firing or a scheduled maintenance action. Pre- and

postfiring barrel maintenance requirements are listed in detail on the appropriate MRC, normally a situation requirement (R) card.

WEEKLY MAINTENANCE

Weekly maintenance is principally concerned with inspecting the bore and the, chamber for signs of corrosion and renewing the coating of oil. Decoppering and gauging may also be done at the time of weekly inspection although they are usually apart of the before and afterfiring routine. Weekly maintenance is particularly important during periods when the gun is not being fired every day.

GAUGING

The plug gauge, described earlier, is used with guns 3 inches and larger for detecting constriction of the bore. After the bore has been cleaned, attach the gauge to the extended sectional handle and pass it carefully through the muzzle until it clears the chamber end. If it passes through smoothly, the bore is not constricted.

If the bore has been constricted by copper fouling, the gauge will not pass. The next step is to mark the part of the sectional handle that is flush with the muzzle end to locate the constriction. Then draw out the gauge, remove it from the sectional handle, and attach the lapping head in its place. Push it into the gun bore up to the mark you placed on the handle and rotate it in the constricted area. Use the cylindrical segments for the lands and the rifled segments for the grooves. A mixture of pumice and oil maybe used as an abrasive. Continue lapping until the bore gauge will pass freely. Never try to force the gauge through the bore; it may stick, causing damage to both bore and gauge.

The plug gauge is the gauge you will use most in maintenance of gun bores. But there are other gauges—headspace gauges, breech bore gauges, and star gauges.

Information about the types and uses of gauges is in system Ops and ODS.

DECOPPERING

We have already described the use of lapping heads and a fine wire brush (0.003-inch wires) to remove copper deposits in gun barrels. If the constriction is not removed after a few trials with the lapping head, the decoppering head maybe used. These are mechanical or abrasive methods.

If there is metallic lead in the propellant, there is much less copper fouling when the round is fired. That is why older propelling charges were manufactured with lead foil in the case. However, the lead causes flash, and the more lead, the brighter the flash, which you do not want. To keep the flash to a minimum, you must keep the lead in most charges to a minimum. Propelling charges now being manufactured contain lead salts for decoppering effect.

MAINTENANCE TOOLS

LEARNING OBJECTIVES: Describe the use of common hand tools, power tools, types of torque wrenches, and special tools used in gun mount maintenance.

You must be familiar with the techniques and tools required to maintain, repair, and adjust ordnance equipment. Further, a GM must be able to select the proper general-purpose tools and special tools and know the safety rules applicable to their use. Maintenance tools can be classified as follows:

- General-purpose hand tools
- Power tools
- Measuring tools and gauges
- Torque tools
- Special tools

HAND TOOLS

General-purpose hand tools are hand-powered and hand-operated. They are designed to perform simple mechanical operations. Examples of typical hand tools are hammers, screwdrivers, and hacksaws. General information about hand tools is in *Use and Care of Hand Tools and Measuring Tools,* NAVEDTRA 12085.

POWER TOOLS

Power tools can either be electrically or pneumatically powered and are hand-operated. They are designed to save time and manpower, Examples of power tools used by the Gunner's Mate are soldering guns, electric drills, and pneumatic grinders.

MEASURING TOOLS AND GAUGES

Measuring tools and gauges are used for measuring and for layout work. Accurate measurements are essential for proper fitting and trouble-free equipment operation. Measuring tools and gauges range from a simple ruler to a highly accurate micrometer. *Use and Care of Hand Tools and Measuring Tools* gives a detailed discussion on all types of measuring tools and gauges that includes the common steel rules, calipers, micrometers, dial indicators, feeler gauges, and depth gauges. When studying *Use and Care of Hand Tools and Measuring Tools,* pay particular attention to reading micrometers and how to make feeler gauge readings. These two measuring tools are used for testing, checking, and adjusting many types of electrical, mechanical, and hydraulic units used with ordnance equipment.

TORQUE WRENCHES

There are times when, for engineering reasons, a definite pressure must be applied to threaded fasteners (nuts and bolts, as they are commonly called). This pressure can be properly applied by a torque wrench. Proper torque aids in the locking of all types of thread-locking fasteners. After tightening, nuts and bolts are held by the static friction of the nut and bolt head against the surface of the items being held together and the friction on the threads of the nut and bolt against each other. This friction is caused by the clamping force created by a slight stretching of the bolt when the nut is tightened. The metal, being slightly elastic, will pull back toward its original dimensions, creating large clamping forces. Excessive tightening will cause the metal to pass its limit of elasticity and cause a permanent stretch.

The principle of torque is based on the fundamental law of the lever; that is, force times distance equals a moment, or torque, about a point. Torque is often called a torsional or twisting moment. It is a moment that tends to twist a body about an axis of rotation. For example, if a common-end wrench is used to tighten a bolt, a force times a distance, a torque is applied to overcome the resistance of the bolt to turning.

Figure 12-7 shows three torque wrenches-the deflecting beam, the dial-indicating, and the micrometer-setting types. The deflecting beam is probably the simplest and most common. The primary component is the beam or measuring element. It is made of alloy steel and maybe round, double round, straight flat, or tapered flat. To one end of the beam is attached a headpiece containing the drive square (tang) and fixed pointer mounting. A yoke is attached to the other end. Mounted on the yoke is the torque scale handle and, when provided, the signaling mechanism. As a force is applied to the handle, the beam deflects with the scale. The pointer remains fixed; hence, a torque is indicated on the scale.

The torsion bar or rigid case dial-indicating type of wrench, also shown in figure 12-7, has its actuating element enclosed in a rigid frame with a removable access cover. The deflecting beam, used in some rigid case wrenches, is similar to that explained previously.

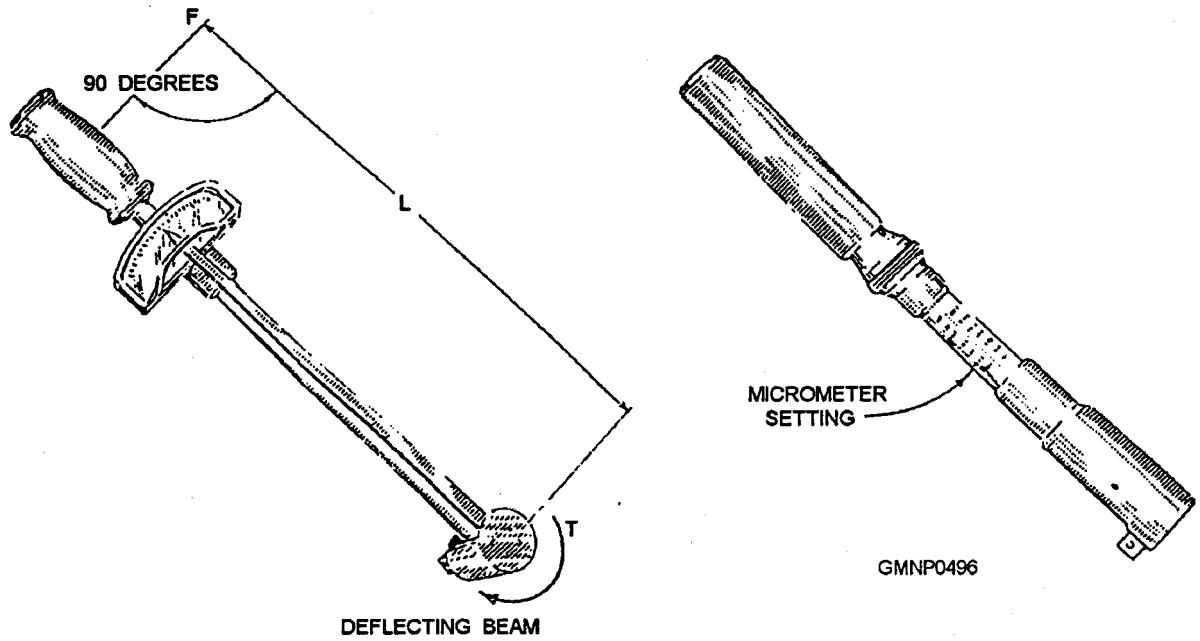

Figure 12-7.—Torque wrenches.

The third torque wrench shown is the micrometer-setting type. To use this wrench, unlock the grip and adjust the handle to the desired setting on the micrometer type of scale, then relock the grip. Install the required socket or adapter to the square drive of the handle. Place the wrench assembly on the nut or bolt and pull in a clockwise direction with a smooth, steady motion.

There are several different types of torque wrenches, but all of them have two basic parts-something that will deflect with the load and something to show how much the sensing element has deflected.

The torque wrench should be calibrated frequently. One that has not been recently calibrated and is not normally stowed in its protective case should be considered as a dangerous tool. You cannot expect to get a meaningful reading from a precision instrument that has been abused. The flat- and round-deflecting beam types will normally give true readings as long as their pointers indicate zero and the drive heads are tight. Because this type can be kept in calibrations, it is recommended for shipboard use.

Other types of wrenches that indicate by means of dial indicator or by releasing or signaling when a preset load is reached are more sensitive to shock and dirt, hence should be calibrated whenever possible. A minimum of 30 days between calibrations is recommended. Never check one torque wrench against another.

An important point to remember always use the proper size wrench-the one with the desired torque near the three-fourths mark of full scale.

When torquing, the critical maneuver is the application of force to the wrench handle. It must be applied slowly and evenl y until the desired torque value is indicated on the wrench scale. When installing a unit that is circular or has more than one side, you should cross-torque the bolts. It may be necessary to cross-torque two to three times before an even torque is reached, but be sure the maximum torque is not exceeded.

Nuts and bolts should be tightened to the torque reading required by the installation drawings. The formula often used is torque in foot-pounds is 0.2 times the bolt diameter times the desired bolt load. A load of about 60 percent of the yield stress of the bolt material is used for most naval applications. However, bolt load varies depending upon whether the bolt or stud is used to support the load itself or to hold together two load-supporting members. Installation drawings will indicate the torque value specified by the designer.

If the bolts are loaded in tension, the torque must be great enough to maintain tightness when the assembly is unloaded and not so large that the bolts yield under load With this type of loading, all bolts must be equally torqued to share the load.

NOTE: Always inspect for clean, lightly oiled threads and clean surfaces before torquing. Discard all hardware with burred threads. For more detailed information on the use and care of torque wrenches, refer to *Naval Ships'* Technical Manual (NSTM), chapter 075.

SPECIAL TOOLS

Special tools are used for one purpose and only on one type of equipment. They are supplied by NAVSEA, and instructions for their proper use are provided in the Ops applicable to the specific type of equipment.

NONSPARKING TOOLS

Nonsparking tools are common hand tools and special tools made from nonferrous metals (metal not containing iron). These tools are used by the Gunner's Mate when working on or around explosives. These tools are generally made from a copper alloy (bronze). However, they may be made from other nonsparking materials. Since these tools are made from a relatively soft material, care must be exercised when using them to prevent breakage or distortion of the tool. Nonsparking tools should be stowed in separate toolboxes and should not be used as common hand tools.

RULES APPLICABLE TO REPAIR TOOLS BEFORE A JOB

Before a job is started, all work procedures should be planned and the proper tools selected to complete the job. Tools not actually needed for a job should be properly stowed in toolboxes or tool lockers.

The quality and type of all tools must conform with Navy standards.

All tools inactive use must be properly maintained. Defective tools should not be used.

Portable electric and pneumatic tools must be kept in the best condition possible. These tools should be checked frequently by the tool keepers for defective switches, electric cords, control valves, and hose connections.

Extensions to the tool handles should never be used to increase leverage.

PRESSURE GAUGES

Pressure gauges are used frequently in conjunction with ordnance equipment. Accurate pressures are necessary to obtain proper operation of hydraulic, pneumatic, and nitrogen accumulator systems used in ordnance equipment. Pressure gauges are also used with hydraulic test kits and magazine sprinkler systems. These gauges are the means of accurately measuring pressures in pounds per square inch (psi). Pressure gauges are used in weapon systems to measure hydraulic fluid pressures (oil gauge), magazine sprinkler system pressure (water gauge), counterrecoil system pressure (air gauge), and accumulator systems pressure (nitrogen gauge).

NOTE: Gauges used on weapons equipment are considered critical and require annual testing and calibration.

The two most common types of gauges used with ordnance equipment are the Bourdon and Schroeder pressure gauges. The theory of operation of these gauges is explained in *Fluid Power,* NAVEDTRA 12964.

The following are some precautions to be observed when using pressure gauges.

- Do not allow pressure to remain on gauges that are permanently installed in hydraulic systems.

CAUTION

Never use a hydraulic fluid gauge for testing air pressure, nor an air gauge for testing fluid pressure. A diesel action may occur! Diesel action is the ignition of hydraulic fluid by air that causes combustion.

- Never use a gauge on any system in which the maximum pressure exceeds the maximum designated range of the gauge.

SOURCES OF MAINTENANCE INFORMATION

LEARNING OBJECTIVES: Discuss the sources of ordnance data and maintenance information.

It would be impractical to try to squeeze into this chapter the many details you must know to perform maintenance, troubleshooting, disassembly, and reassembly to ordnance equipment assigned to you. Since there are many different marks and mods of equipment performing the same function "but having different working parts, the Naval Sea Systems Command (NAVSEASYSCOM) prints a publication requirement list for every active-duty ship now in service. This list is based on the major units installed and lists all the Ops, Ods, FMs, and TMs needed for repair, maintenance, test, and operation of these equipments. Copies of all the publications listed in this list are furnished to the vessel as part of the original commissioning allowance. If additional copies are required, they can be ordered through the appropriate supply point.

OP 0 is the index of the NAVSEASYSCOM ordnance publications. It lists by number and subject the ordnance publications (Ops) and ordnance data (Ods) used in the Navy. OP 0 also lists all current revisions, changes, and supplements to OPs and ODs. In addition, it includes current Army field manuals (FMs) and Army technical manuals (TMs) used by Navy activities. Your OP 0 may or may not be on microfiche.

ORDNANCE PUBLICATIONS

OPs are used by the operating forces and contain descriptions of ordnance equipment and their component parts and instructions on how to operate, maintain, disassemble, reassemble, test, and adjust the equipment. All OPs have a section on safety instructions for operating the equipment and general and specific safety orders when troubleshooting. The OPs are published by NAVSEASYSCOM, each under its own OP number. Newer OPs are issued using the new Technical Manual Identification Numbering System (TMINS). As older OPs are updated, they are often converted to the new numbering system. They maybe prepared by some other naval activity, by the manufacturer, or by the command itself. Any changes to OPs are issued by NAVSEASYSCOM. Changes issued to the fleet are numbered and a record of all changes is listed on a change record sheet posted in the front of every OP. The information on these sheets includes the change number, the date the change was made, the title or brief description of the change, and the signature of the person making the change.

ORDNANCE DATA

ODs are a kind of catchall. They are used for publishing advance information or instructions on ordnance equipment installation and alignment data, parallax data, and other miscellaneous information, such as tables of weights and dimensions. ODs are numbered consecutively by the issuing agency. ODs, like OPs, are listed in OP 0.

One OD that is required reading for you and for all other Gunner's Mates is OD 3000, *Lubrication of Ordnance Equipment.* It is the one OD that your ship's library of ordnance publications must not be without. Other ODs maybe useful to you, depending on the type of ship you are aboard and its armament. For this information you should consult OP 0. If the ODs are not already in your ship's library, they can be ordered.

Revisions

Revisions are made to OPs and ODs when the original publication becomes obsolete due to many design changes to the equipment. Revisions are numbered and the latest revision supersedes the previous one. When revisions of OPs are made available, be sure you check the new OP for the purpose of the revision. In some cases, a revision may completely replace other OPs or ODs and their supplements. A statement in the front of each revised OP or OD identifies those publications that are made obsolete by the revision.

Changes

Changes may consist of pen-and-ink changes, complete page changes, or changes to drawings and sketches. Changes are made to OPs and ODs after Ordnance Alterations (ORDALTs) have been completed or when errors and inaccuracies are found in a publication.

Supplements

A supplement is an addition to an OP or OD that reflects changes to equipment or its operation made since the OP or OD was published. The original publications are still used; the supplements describe only the differences between the major assemblies or the differences between the marks and mods of gun mounts, missile launchers, and rocket launchers.

Supplementary Sources

At times, during the course of your work, you may require information not covered in OPs or ODs. Where you find this information depends upon the type of ordnance equipment with which you are working. If you are working with demolition equipment, for example, explosives ordnance demolition bulletins (EODBs) could help you. Other types of publications are special weapons ordnance publications (SWOPs), NAVSEA instructions and notices for general policy matters, and such other publications as ORDALTS-00 that supply information on all ORDALTs for aircraft, shore stations, and all classes of vessels.

The Army prepares several publications that are also applicable to Navy ordnance. These include field manuals (FMs), technical manuals (TMs), technical bulletins (TBs), and joint publications of the Army, Navy, and Marine Corps. These publications are listed in the *Index of Doctrinal, Training, and Organizational Publications,* DA-PAM 310-3, U.S. Army, or SL-1-3, *Index of Publications Authorized and Stocked by the Marine Corps (PASMC).*

ORDNANCE DRAWINGS

LEARNING OBJECTIVES: Discuss the main types of drawings used in gun maintenance and overhaul. Discuss the purpose of the illustrated parts breakdown (IPB) publication. Discuss the purpose of the standardized symbols used in hydraulic diagrams.

To do any kind of maintenance work on your equipment, you must know it well. A good way to learn about it is to study the hardware itself. But you will learn faster and you will learn more by using certain source materials. This manual is such a source; so are the OPs, ODs, and other publications. In many ways, however, your most valuable source material could be ordnance drawings.

All manufacturers of ordnance equipment make drawings of all equipments they manufacture. Copies of these drawings, reproduced by blueprinting, Xerox process, or in some other way, are supplied to every naval ship or installation that either has the equipment or, for some other reason, requires copies of these drawings. Many drawings are reproduced in OPs and other technical manuals. Some of the drawings you will use are made by NAVSEA, but many others are made

by the contractors who manufacture the equipment for NAVSEA.

TYPES OF DRAWINGS

Drawings differ depending on their purpose. The main types of drawings, as classified according to purpose by NAVSEA, are as follows:

1. General arrangement drawings. This kind of drawing shows the complete equipment assembled. It indicates general appearance and relationships of important component assemblies and identifies the drawings that describe the components of the equipment.

2. Installation drawings. These drawings show such features as mounting pads and brackets, shock mounts, points for entrance of cabling and mating mechanical parts, type of cable required, dimensions of mounting hardware needed, and directions for how to orient the equipment and secure it to its place on the bulkhead or deck. One variety of this type of drawing, called an outline drawing, shows overall dimensions and clearances required for operating and servicing equipment.

3. Assembly and subassembly drawings. These drawings show the constructional details of the assemblies that make up the complete equipment. In general, you can think of an assembly (or subassembly) as any group of two or more parts assembled to make up a unit. An assembly drawing is intended to enable a properly equipped shop to make up the finished assembly from the prescribed parts and assembly and finishing materials.

4. Detail drawings. When you disassemble any piece of equipment far-enough, you eventually get down to individual pieces that cannot be disassembled any further. These are represented by detail drawings that give all the information that a properly equipped shop will need to make the piece exactly as required.

5. Wiring drawings. The main purpose of a wiring drawing or diagram is obvious from its name—it shows you how to wire apiece of equipment or a system. There are several varieties of wiring diagrams.

An external wiring diagram shows how to connect an item of equipment to the ship's wiring system or to other pieces of equipment. It shows terminal boards, binding posts, plugs, jacks, and other connection points and devices, and identifies them by letters and numbers. Lines denote the electrical conductors to be installed. The drawing shows the size and type of wire to be used; the kind of insulation, shielding, ductwork, and armoring specified, as applicable; length needed; where ground connections are to be made; where joints must be soldered, welded, or clipped; and so on. It also specifies the kind of current (ac or de), frequency, and voltage for each conductor.

An internal wiring diagram does the same for wiring inside an equipment. It also identifies and shows where the fuses are, the size and type to be used, and their circuits. It locates and identifies, with standard symbols, all lamps, motors, synchros, resistors, capacitors, transformers, chokes, switches, relays, and all other electrical components in the equipment and gives their electrical values, as applicable. It identifies all the terminals and connection points. This is one of the most useful kinds of drawings for electrical maintenance and troubleshooting.

An elementary wiring diagram is about halfway between the diagrams we have just discussed and the schematic to be taken up shortly. It shows terminal and connection points, component locations and values, and soon, but it is also arranged so that it is much easier to follow and understand the circuit than with the usual wiring diagram. But note that the elementary, like the pure schematic, has little respect for the actual sizes and shapes of parts or equipment or for their physical location or orientation. The traceability of the circuit is a much more important consideration.

6. Schematic drawings. About the only general statement you can make about schematic drawings or diagrams is that their primary purpose is to help the user understand the functioning of the equipment. In ordnance, schematics of electric, hydraulic, and pneumatic systems are of great importance in assisting you as a repairman. Schematics often have very little to do with the actual physical appearance or construction of the equipment diagramed.

7. Lubrication drawings. A lubrication drawing or chart for naval equipment is often a general arrangement drawing, or a group of them showing several views, where lubrication fittings and other points are called out by labels. The OP on older equipment normally has a lube chart in its appendix.

8. Tool drawings. Special tools, such as spanner wrenches, for specific marks and mods of guns are described in tool drawings—usually assembly or detail type. These tools are listed in the specific OP.

9. Lists of drawings (LDs). LDs, as mentioned previously, is considered by NAVSEA to be a variety of sketches. In itself, this detail of classification is 'not

especially important in your job, but it is worth remembering that an LD looks like and is treated like a kind of engineering drawing, rather than like a publication.

LDs are, in a sense, the key to the drawing system used by NAVSEA. Beginning at the top of the system, a master list of drawings, or master LD, is prepared for each major ordnance equipment (such as a gun mount). This list includes all components of the equipment concerned Each component is itemized by assemblies, subassemblies, and details on a separate LD.

The identifying number for each component LD is given, together with the general arrangement drawing number on the master LD for the equipment. Each component LD also shows the special tools required for servicing that component. By reference to the LD and the drawings for the mark and mod of a given assembly or subassembly, it is possible to work down to an individual part and to identify the correct nomenclature, drawing, piece number, design dimensions, tolerances, and all other necessary information.

When we refer to a drawing or engineering drawing without qualification, we usually refer to an assembly, subassembly, or detail drawing. Such drawings, as we have seen, explain how to manufacture some part or assembly. And they are also valuable guides for you in overhauling and repairing equipment. These drawings are valuable not only because they show how parts fit (though this is very important itself) but also because they describe and enumerate the fastening hardware you need to put the assembly together (including the proper bolts, nuts, patent fasteners, pins, etc.). They also show the minor, but essential, parts that the assembly must have so that it will continue to function as the designer intended. A watertight enclosure, for example, will leak if it does not have the exact gasket called for in the drawing; screws may loosen if they have not been assembled with the lock washers specified in the drawing; and nuts will work free if they have not been secured with the cotter pins listed in the drawing.

Other types of drawings are equally valuable. General arrangement drawings are good references for the exact nomenclature of major units and as guides to drawings on component assemblies. Installation and outline drawings contain just the information on clearances and dimensions that ship's personnel require when a new piece of equipment is to be installed, and they show how to arrange the piping and wiring to be connected to it. External wiring diagrams show just how to hook equipment into the ship's wiring. After installation, they aid in troubleshooting for faulty circuits and malfunctioning components and in electrical alignment of synchros and other data transmission devices. Internal wiring diagrams are equally valuable for making circuit checks in case of trouble in the equipment. Elementaries are helpful in training personnel and can be used in checking circuits. And, finally, LDs are valuable guides in tracking down the particular piece of information you maybe looking for.

Every ship carries copies of drawings on its equipment in the form of blueprints, photoprints, microfilm, or microfiche. These copies are assembled into sets, each set covering one item. Photoprints are usually bound in books. Aboard ship, both blueprints and photoprints are called ordnance drawings. Blueprints and photoprints are available to you either in a special file in the repair shop or in the custody of your department head. Make use of them; they will help you become familiar with the ordnance you will overhaul. (Remember to treat Confidential drawings as you would any other Confidential publication.)

Down in the lower right-hand corner of each drawing you will find a drawing number. On each detail pictured in the drawing, you will find another smaller number. These are the piece numbers. These numbers identify both the hardware and the drawing. Sometimes you will find a letter after the piece number showing how many times that piece has been changed or modified since the original design.

Every part of every ordnance device (unless it is very small) has a part number stamped on it. The first number is the drawing number; the second is the piece number. For example, you will find numbers like 120460-2. This should read: "drawing number 120460, piece number 2."

Look for these numbers and use them. Refer to them when you report on a particular piece or when you order new parts.

ILLUSTRATED PARTS BREAKDOWN

An illustrated parts breakdown (IPB) is a publication usually in the form of an OP that describes and illustrates all components used in ordnance equipment. An IPB is broken down into sections that identify component parts by major assemblies, subassemblies, and detailed parts. All illustrations in these publications have figure and index numbers for proper repair part identification. The figure number represents a unit; the index number identifies just one part of that unit. Each unit has an identifying part

number and accompanying each part number are the name and description of the part it represents. Part numbers are then cross-referenced to a current NSN to order replacements. The IPB illustrates the assembly of your equipment using expanded drawings. These expanded drawings are very helpful in locating lubrication fittings and other components that often elude a maintenance person.

Some IPBs have a cross-reference section that converts the identifying number to a part number or national stock number (NSN). These cross-references may not have the latest NSN; the appropriate section of the Coordinated Shipboard Allowance List (COSAL) should list all the latest NSNs. An index of IPBs is listed in OP 0.

HYDRAULIC DIAGRAMS

Hydraulic symbols are used throughout the world in design, operation, and maintenance of fluid power systems. A thorough knowledge of hydraulic symbols will enable you to read and understand hydraulic circuit diagrams and other drawings of hydraulic circuits.

Hydraulics today have many and varied applications; therefore, a standardized set of symbols was agreed upon at a joint industrial conference of leaders. This conference recommended a system of designating symbols that some of the commercial manufacturers are presently using. These symbols for fluid power diagrams are listed in USAS Y32.10.

Graphic symbols provide clear-cut circuit information, and well-prepared circuit diagrams show every part of a hydraulic circuit clearly. Symbols are available for most commercial components. Drawings that use symbols will normally also supply a legend for their interpretation. *Blueprint Reading and Sketching,* NAVEDTRA 12014, and *Fluid Power,* NAVEDTRA 12964, give some elementary information on the theoretical background of drafting, on how to read drawings of all types, how to sketch, what type of information is found in a title box of drawings and schematics, and additional information on symbols used in electrical, electronic, and pneumatic sketches, schematics, block diagrams, and mechanical drawings.

PARTS NUMBERS

When ordnance parts are identified through the use of the IPB, ordnance drawings, or from part of manufacturer's numbers stamped on the parts, an NSN for each part is required before the parts can be requisitioned. These NSNs are listed in the COSAL that has across-reference section that converts apart number to an NSN.

The COSAL establishes the shipboard allowance for installed and portable equipment, equipage, and supporting material. Each COSAL is prepared for an individual ship and enables that ship to have a maximum self-supporting capability for an extended period of time.

Ships are issued a separate COSAL for each category of material. The index to all COSALs is issued by the Naval Supply Systems Command. Normally, one copy of the ordnance COSAL is kept by the supply department and one copy by the weapons or combat systems department,

If an NSN for a part cannot be found, the part can be requisitioned by the drawing and piece number and any other identification, such as the equipment's mark and mod, the manufacturer's name, the amperage and voltage rating, the name of electrical parts, and the serial number of the major unit from which the part was removed. Additional information about apart can also be obtained from equipment IPBs.

COMMON MAINTENANCE PROCEDURES

LEARNING OBJECTIVES: Discuss hydraulic and mechanical maintenance procedures, seal replacement, and special tools used on naval gun systems.

Traditionally, some of the most common preventive maintenance procedures have had to be learned by the maintenance person on the job. This is the case with replacing hydraulic seals and making mechanical adjustments. In this section we will provide you with some insight into the performance of these procedures. It maybe helpful to have the maintenance manuals for your system handy to refer to as we go through these procedures. In all cases, you must consider the system maintenance manuals and maintenance requirement cards (MRCs) as your primary source of guidance and information. The information provided here is intended to augment and clarify these manuals.

HYDRAULIC SEAL REPLACEMENT

Most modern gun systems are loaded and positioned by hydraulic machinery. System pressures, in many cases, exceed 1,000 pounds per square inch (psi). As a Gunner's Mate performing routine maintenance on your gun, you need to be constantly on the lookout for hydraulic fluid leaking past the seals around pistons and operating shafts. When your system is leaking, it is telling you something. The seals are breaking down or are worn and could rupture at any time. Should the packings around a large high-pressure piston fail, you could dump 10 or 15 gallons of hydraulic fluid before the system can be secured. All leaks need to be reported, documented, and repaired as soon as possible.

Leak Documentation

When a leak is first discovered, it should be reported to your leading petty officer (LPO) and/or work center supervisor (WCS). Normally as the maintenance person, you will also be required to document the leak using the ship's 3-M Systems, Form 4790-2K. In the write-up, it is important to use proper terminology in describing the exact location and component where the leak exists. In describing what is required to correct the problem, it is helpful to include the part number and quantity of seals and other repair parts needed to do the job. Component names and part numbers are found in the IPB. Providing an exact description of the problem and the parts required to effect the repair serves two purposes. If, for some reason, you are not available to help when the repair is scheduled, other maintenance personnel will be able to identify the problem and its solution easily. Second, when a problem is documented, it is incorporated into the *Current Ship's Maintenance Project* (CSMP). The CSMP provides Navy managers at all levels with information concerning the readiness of the systems aboard ships. It is used to plan and coordinate maintenance actions in the work center and to put together overhaul packages for completion by tenders and shipyards.

This documentation procedure not only applies to hydraulic leaks but to all other corrective maintenance you will perform. It is not normally necessary to document routine mechanical adjustments. However, if the adjustment is necessary due to replacement of a damaged or worn component, the circumstances surrounding the component replacement should be recorded.

Types of Seals

Before we go into the actual repair process, we need to describe some of the common types of seals used in ordnance equipment. A normal high-pressure packing consists of a U-Cup seal and a wiper ring. The U-Cup seal is installed with the cup facing the pressure it is to contain. As hydraulic pressure is applied, the cup falls and the sealing edge is held against the shaft or piston surface. The wiper ring keeps the piston surface clean to prevent wear of the U-Cup seal. These seals are often contained in an insert, called a packing gland, that is bolted or screwed into a valve block or cylinder. The packing gland allows for easy replacement of the seals since it can be removed. Figure 12-8 shows these seals and how they are installed in an actual valve block The U-Cup seal is contained in a machined groove on the inside surface of the packing gland. The wiper ring is installed into another machined groove at the outside edge of the gland. Note the rubber O-ring seal in the machined groove around the outside of the packing gland. Since both are machined to very close dimensions, an O ring is sufficient to contain any seepage that may occur. O rings are used throughout ordnance equipment in low-pressure sealing applications.

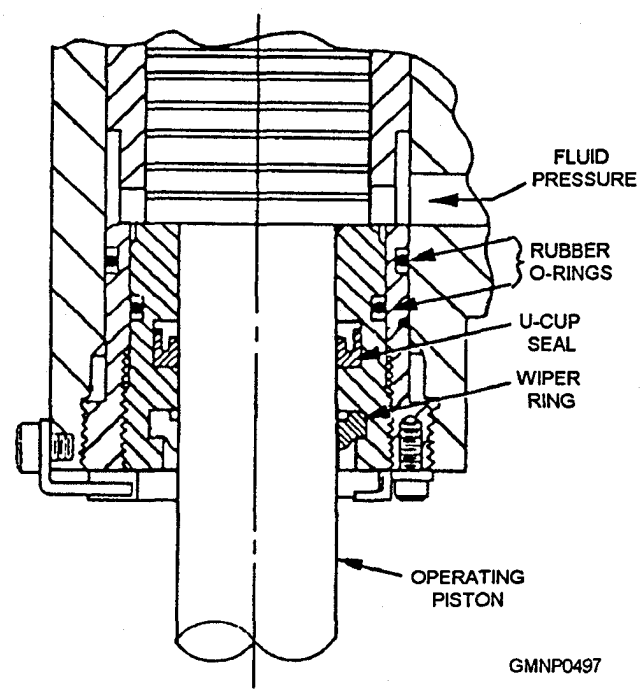

Figure 12-8.—A typical high-pressure hydraulic seal.

Another type of seal you may encounter is the encased seal (fig. 12-9). This type of seal is found where rotating shafts exit gearcases or other fluid-filled reservoirs. As the name implies, the seal is encased in a metal housing. Sealing surface tension around the rotating shaft is maintained by a spring located under the lip of the seal. The metal case of the seal allows it to be pressed into the component casing.

Seal Replacement

In replacing hydraulic system seals, you must take care not to contaminate the system. Contaminates in a hydraulic system can have devastating effects. Damage can range from accelerated seal wear to the total destruction of pumps, valves, and drive units. Using some simple precautions can help make sure your system remains free from contamination. First, make sure the area around the component you are going to disassemble is thoroughly cleaned Second, after a component is removed, coverall exposed openings into the system with rags. Components removed for access can be reinstalled with their bolts turned finger tight. Reinstalling components and their retaining bolts also helps you to keep track of them. Last, make sure the component and the area it is to be reinstalled into are thoroughly cleaned. Anything you can do to limit hydraulic system exposure to outside conditions will help you maintain a system free of contamination.

Seal replacement often requires the use of special tools. A good example of this is the tool used to reinstall the packing gland over the end of the recoil piston (fig. 12-10). The tool is in the form of a ring, tapered on the outside, that is slid over the threaded end of the recoil piston and up against the squared end of the enlarged section of the piston. The tapered outside of the tool allows the sealing surface of the U-Cup seal, which is fitted into a machined groove inside the packing gland, to slide easily past the squared end of the enlarged section of the recoil piston. The disassembly and reassembly of major gun system components are described in the system maintenance manual. Any special tools needed are identified throughout the procedure as required. All gun mount special tools are illustrated and described in the system maintenance manual.

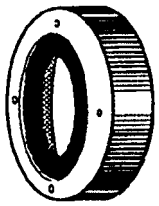

Figure 12-9.—Encased seal.

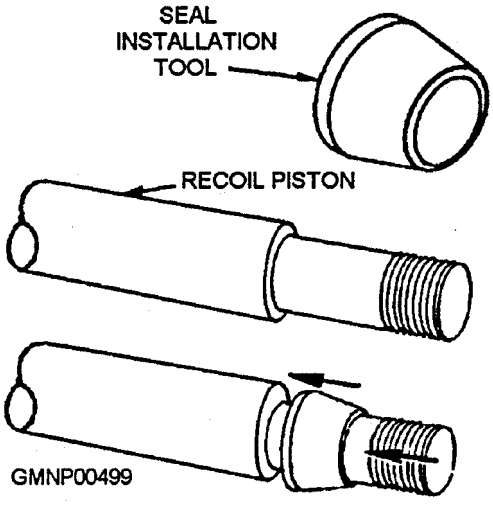

Figure 12-10.—Use of a hydraulic seal replacement special tool.

The disassembly of hydraulic equipment inevitably causes air to get into the system. Your system will be fitted with vent plugs for releasing this air. Air is compressible and can cause your system to operate erratically or sluggishly. Be sure to follow the detailed instructions found in your systems maintenance manual or the appropriate MRC for venting air from the hydraulic system.

You may also find it necessary to replenish your system with hydraulic fluid after a repair is completed. The procedure for adding fluid to the system can be found both in the system maintenance manual and on a situation requirement (R) MRC. You will normally follow the procedure described on the MRC. Additional information on seals and seal replacement can be found in *Fluid Power,* NAVEDTRA 12964.

MECHANICAL ADJUSTMENTS

Gun loading system hydraulic machinery uses hydraulic pressure to position mechanical devices that move rounds of ammunition through the system for firing. Almost without exception, these mechanical devices must be adjusted to maintain travel and proximity tolerances to ensure proper performance. Some adjustments are verified during routine maintenance as part of the procedure contained on an MRC. Most often, however, you will need to make adjustments to mechanical equipment after it has been disassembled, repaired, and reassembled. Such is the case, for example, after a linkage has been removed to get to a hydraulic packing that required replacement or after a damaged component has been removed and replaced You must refer to the system maintenance manual to determine the exact procedure and tolerances before making any mechanical adjustments. With this

in mind, we will now provide you with some general information on the different types of mechanical adjustments found on gun mounts.

Clevis

The most common mechanical adjustment involves a threaded linkage that is screwed into or out of another component to adjust its travel or proximity to other components. Most mechanical linkages are connected to each other and to the components they control or operate with a clevis (fig. 12-11). A clevis is a U-shaped piece of metal with holes through the ends where a pin is inserted to attach one thing to another. The clevis is used as a flexible connection for mechanical linkages. It can be adjustable or nonadjustable and is often refereed to as a yoke. The adjustable clevis may be either threaded through the base to allow for the insertion of a threaded shaft or it can be manufactured to include a threaded shaft. Often, the two configurations are used together as opposite ends of an adjustable linkage.

Threaded Shaft

Another common mechanical adjustment consists of an operating shaft threaded in one or both ends. A connecting shaft or actuator is screwed in or out of these threaded ends to adjust its travel or proximity to another component. This configuration can be used to adjust cam followers and mechanical actuators that push or pull a component to cause its operation (fig. 12-12).

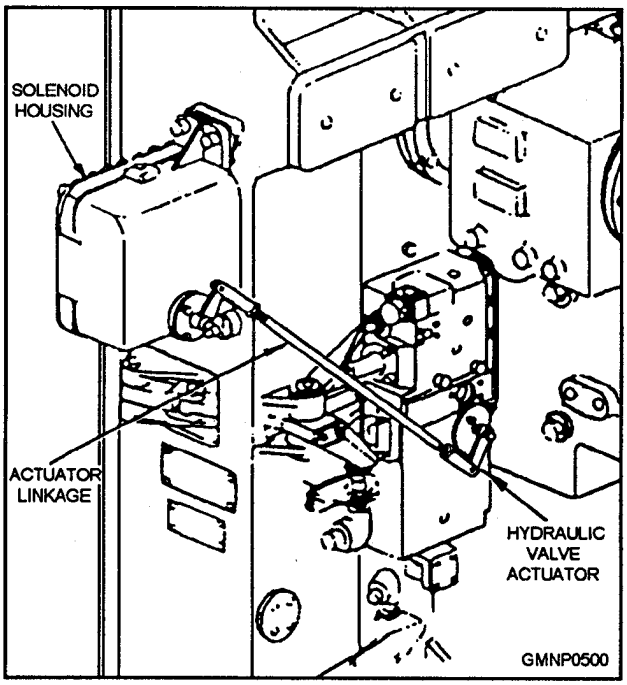

Figure 12-11.—The clevis.

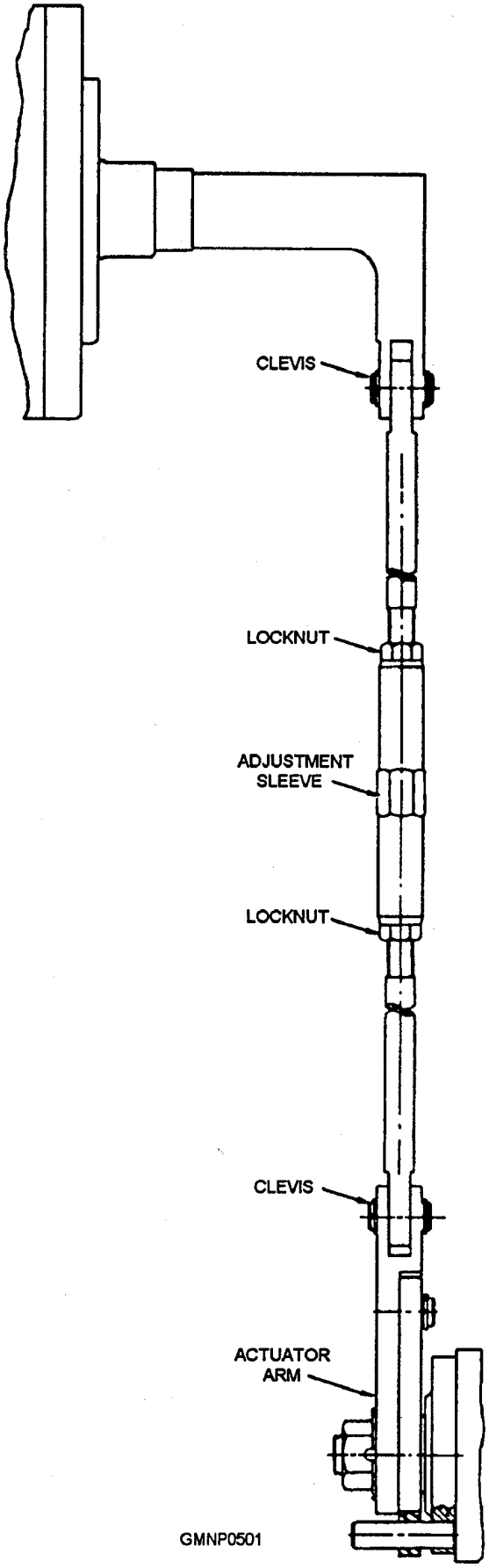

Figure 12-12.—Threaded linkage adjustments.

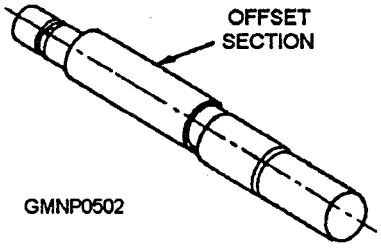

Figure 12-13.—Eccentric shaft.

Eccentric Shaft

In some special instances a mechanical adjustment may involve shifting the rotational axis of a pivoting component. This is accomplished through the use of an eccentric shaft. An eccentric shaft, as shown in figure 12-13, is an otherwise straight shaft with an offset disk in the middle. The offset disk is the rotational axis of a pivoting component. Being offset, it allows this axis to be adjusted simply by rotating the shaft. In some cases, the eccentric shaft may be used as an adjustable securing pin instead of a pivot point.

Shims

Some gun mount adjustments are accomplished using shims. This is often the case when a major component is replaced and must be "fitted into alignment or proximity with surrounding components. A shim is a noncompressible material, in sheet form, that is inserted between two components that are bolted together. Shim material is available in a standard pack of three different dimensions that can be cut and added together to achieve the desired thickness.

Hydraulic and mechanical maintenance is at the core of the traditional work of the Gunner's Mate. Mastery of hydraulic and mechanical maintenance, along with proficiency in troubleshooting electronic control circuits (chapter 5), is the defining characteristics of your expertise as a Gunner's Mate.

DAMAGE CONTROL PMS

LEARNING OBJECTIVES: Discuss the importance of divisional damage control on naval ships.

A common attitude throughout the fleet is that damage control (DC) is the responsibility of the engineers. As a result, the material condition of a ship frequently deteriorates due to a lack of attention to damage control maintenance at the various levels of performance. In fact, DC is an all-hands responsibility and should be performed and managed as such. What's the value of having a gun or radar working at 100 percen" capacity if the ship is already sinking?

A large amount of DC maintenance, such as weighing fire extinguishers or checking the operability of battle lanterns, are considered to be routine tasks and can be accomplished by just about anyone. Figure 12-14 shows atypical organizational structure of the DC PMS program aboard ship. As shown, a senior Hull Technician/Damage Controlman serves as the

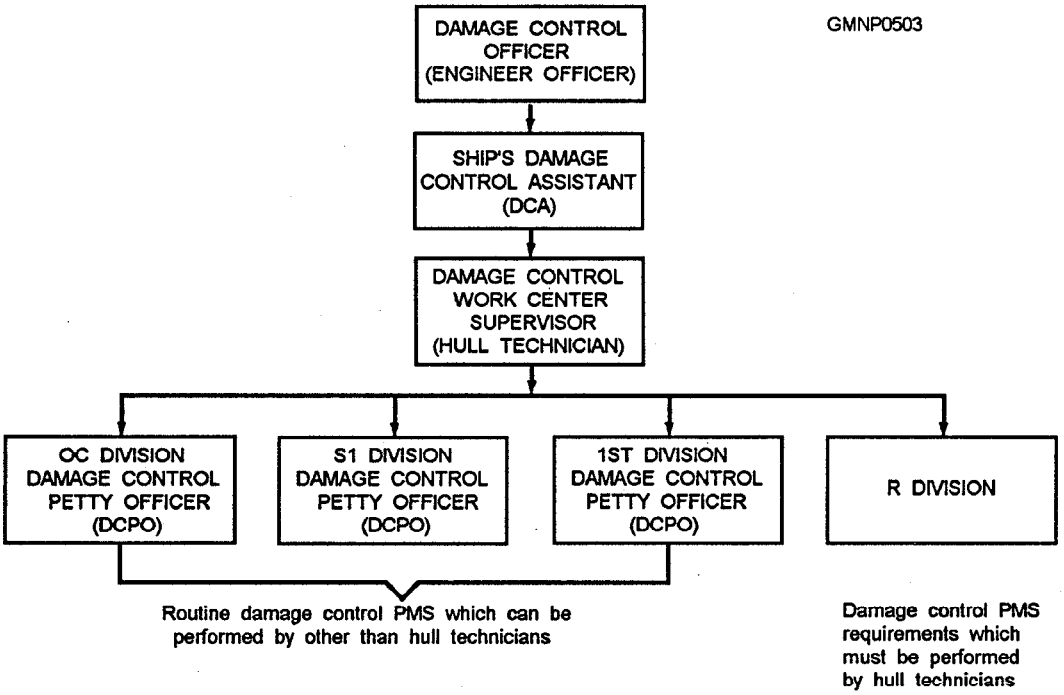

Figure 12-14.—Representative organizational structure for damage control PMS.

shipboard damage control work center supervisor. Each division assigns a damage control petty officer (DCPO) to the DC work center. The DCPO then performs the routine maintenance on the DC equipment located in his or her division spaces as assigned by the DC work center supervisor.

PMS schedules for DC are kept in nearly the same manner as regular PMS schedules and are maintained for the entire ship by the DC work center supervisor. Individual weekly schedules may also be maintained by the DCPO within his or her spaces in the division. Since the quarterly schedule lists each division assigned to perform DC PMS, it will not match the cycle schedule line for line.

Scheduling instructions for DC PMS is located in chapter 5 of OPNAVINST 4790.4. Shipboard damage control organization and requirements are outlined in *Surface Ship Damage Control,* NWP 62-1.

PMS MANAGEMENT

LEARNING OBJECTIVES: Discuss the importance of PMS management at shipboard and type commander levels, and the definitions used to evaluate the PMS program.

One of the most important considerations in the operation of a PMS program is the proper management of that program at all levels concerned.

SHIPBOARD EVALUATION OF PMS

To have an effective maintenance program, you should be involved at all levels of management aboard ship in the supervision and evaluation of PMS. It can be safely said that every officer and most chief petty officers will be tasked with evaluating the accomplishment of PMS aboard their ship. A typical example of the structure of the 3-M organization aboard ship is shown in figure 12-15. As you can see, the majority of senior shipboard personnel are involved with PMS functions.

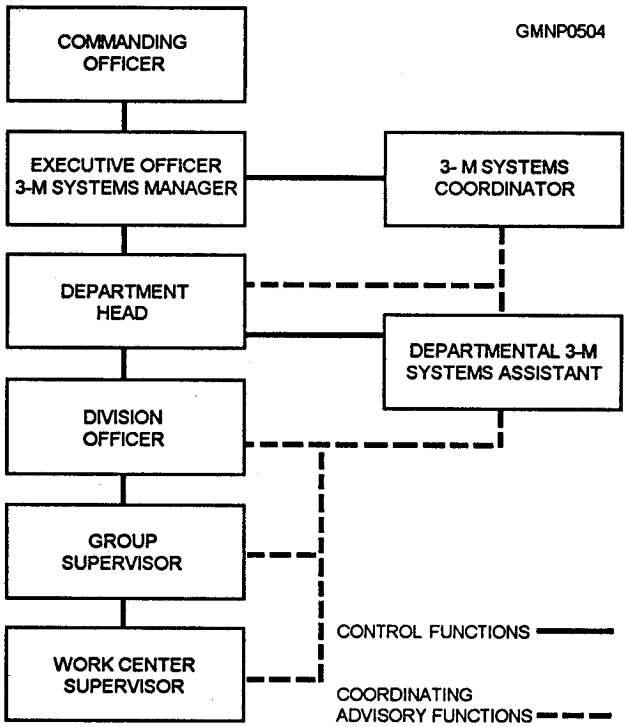

Figure 12-15.—Shipboard 3-M Systems organization.

One of the best ways to evaluate the effectiveness of shipboard PMS is by conducting spot checks of individual maintenance requirements. As the leading GM, you may often be tasked with performing a spot check on a work center outside of your department. Table 12-2 identifies the minimum shipboard spot check requirements, who they should be accomplished by, and the periodicity at which they should be conducted.

The maintenance prescribed in the PMS package is defined as the minimum required. Therefore, a maintenance requirement that has been deferred beyond its assigned periodicity is not considered to be accomplished. These deferrals will affect the

Table 12-2.—Minimum PMS Spot Check Requirements and Periodicity of Accomplishment

Management Level	Number of MRs Audited	Interval
Commanding Officer/ Executive Officer	1 per own ship	Weekly
Head of Department	3 per department	Weekly
Division Officer	1 per division work center	Weekly

accomplishment rate of the PMS of the work center and should be kept to a minimum. The work group or work center supervisor should know at all times what maintenance requirements have been deferred and for what reason(s).

TYPE COMMANDER EVALUATION OF PMS

In addition to shipboard evaluation, type commanders (TYCOMs) are also tasked with monitoring the effective management of PMS within their respective commands. The TYCOM conducts PMS inspections at periods of 18 to 24 months, using his or her own qualified inspectors, working in conjunction with the ship's 3-M coordinator and other shipboard managers as required. These inspections are conducted on a "no advance notice" basis. A PMS Performance Rate (PPR) of less than 75 percent is a failing grade and will definitely bring down some high-powered attention from such people as your squadron or group commander.

To ensure standardization for the measurement of PMS performance, you should use the following definitions to evaluate PMS performance:

PPR—(PMS Performance Rate). This is an overall quantitative evaluation of the actual performance of the required maintenance planned for accomplishment.

RAR—(PMS Recorded Accomplishment Rate). This is the percentage of maintenance scheduled during the period of examination that is recorded as accomplished.

ACF—(PMS Accomplishment Confidence Factor). This is the percentage of maintenance recorded as accomplished that is evaluated as actually having been performed.

A— This is the symbol that identifies the number of maintenance requirements actually scheduled. It is used to compute the RAR.

B— 1 This is the symbol for the number of maintenance requirements recorded as fully accomplished. It is also used in computing the RAR.

C— This is the symbol for the number of partials and is the final factor required to compute the RAR.

N— This is the symbol for the number of maintenance requirements evaluated by the inspector as not accomplished. It is used to compute the ACF.

P— This is the symbol for the number of maintenance requirements evaluated by the inspector as having been partially accomplished. It also is required to compute the ACF.

S— This symbol represents the number of maintenance requirements sampled by the inspector and is the final factor required to compute the ACF.

The ship's final grade is determined by computation of its PMS Performance Rate (PPR) as follows:

First, you must determine the RAR by using the following formula:

$$RAR = \frac{B + \frac{C}{2}}{A}$$

Second, determine ACF by using the formula

$$ACF = \frac{\left(S - \frac{P}{2} - N\right)}{S}$$

Now you can determine your PPR by using the formula

$$\mathbf{PPR = RAR \times ACF}$$

This system may seem complicated but is actually simple once you have learned to use it. You can use it to monitor your accomplishment rate, as well as to identify problem areas within your ship's PMS program. Detailed instructions on PMS inspections and their procedures are located in chapter 5 of OPNAVINST 4790.4.

QUALITY ASSURANCE

LEARNING OBJECTIVES: Discuss the quality assurance program, its importance, and responsibilities of the Gunner's Mate with respect to naval ordnance.

The Quality Assurance (QA) program is designed to provide the fleet with safe ordnance material of the highest quality in a timely manner. The basic priorities are safety first, quality second, and quantity third. The program is conducted when the material is acquired from the contractors and during receipt, production,

maintenance, stowage, and issue of ordnance material at naval activities.

Quality assurance requirements and procedures ensure that:

1. Incoming ordnance material is of the designated type and quality; has not been damaged in shipment; is identified with the appropriate condition code status (serviceable, unserviceable, suspended, etc.); and is packed, packaged, and preserved as necessary. This will permit further processing in a safe manner and aid in the prevention of material damage or deterioration during stowage, handling, and issue.

2. Ordnance material is segregated into compatible groups by explosive content and condition code for stowage, further processing, or transshipment.

3. Ordnance material is controlled during handling and stowage to prevent the existence of unsafe conditions or degradation of serviceable material.

4. Periodic maintenance is performed as required and maintenance and renovation operations are controlled to ensure that ordnance material completing these operations conforms to all applicable specification requirements.

5. Only safe and serviceable ordnance material is issued to operational units.

6. Ordnance material destined for outload is packed, packaged, and preserved as specified in applicable technical documents and, after loading, is securely blocked, braced, and dunnaged in the carrier to facilitate safe transport.

ORGANIZATION AND RESPONSIBILITIES

The commanding officer of an activity has final responsibility for the quality of issued ordnance material. Weapons and ordnance personnel are responsible for ensuring the quality of ordnance material to be issued and for maintaining control of ordnance material throughout activity operations. The quality assurance organization within a command is responsible for providing assurance that the necessary controls are established and maintained and that ordnance material being issued meets specified quality requirements.

A quality assurance organizational element responsible for performing quality assurance functions on ordnance material is required at each activity. This quality assurance element must be established at a level that provides the organizational independence necessary to achieve full implementation of quality assurance procedures. Each activity must plan, establish, staff, and maintain the ordnance quality assurance organization commensurate with local work load. The head of quality assurance serves as the commanding officer's representative and reports directly to the CO.

At ordnance-oriented activities, such as naval magazines and naval ordnance facilities or naval stations, the ordnance quality assurance organization should be established as a division within the weapons/ordnance office. Another alternative at these types of activities is to include the ordnance quality assurance organization as a division within the QA department of the activity, along with quality assurance organizations for other programs.

Each division within the QA department must be divided into branches as necessary to perform the required QA functions effectively.

The head of an ordnance QA organization ashore may be military or civilian. However, it is essential that this person be well-qualified in ordnance QA procedures, methods, and techniques, in addition to being knowledgeable in the technical aspects of the specific ordnance material being processed. In any event, the individual must have the ability to plan and manage the ordnance quality assurance functions and train subordinate personnel as required. Collateral nonquality assurance functions assigned to the ordnance QA organization should be kept to a minimum. This is necessary to avoid detracting from the essential ordnance QA functions. Subordinate personnel must also have a good working knowledge of both the technical aspects of the material and ordnance QA procedures.

In some cases, because of budgetary, manpower, or other limitations, it may not be possible to establish a separate quality organization. In this case, qualified personnel from within the activity must be selected and trained to perform the QA functions. Such personnel should be permitted to perform the assigned QA functions without undue external pressure, the bias of inspecting their own work, and being held responsible for delays in production.

The weapons department should have an ordnance indoctrination/training program. The QA organization should provide the materials for the quality assurance segment of the indoctrination/training. The QA segment of the indoctrination maybe accomplished by

QA personnel or through normal activity training program procedures.

A list of military and civilian personnel whose work assignments may directly affect the quality of ordnance material must be compiled and the personnel scheduled into the indoctrination/training program. New personnel destined to perform work related to ordnance material should be scheduled into the indoctrination/ training program as they arrive on station. Weapons supervisory personnel and QA personnel must be constantly alert to the need for refresher training or other specific ordnance-related training requirements as evidenced by the quality of work performed. Weapons supervisors will ensure that the necessary on-the-job training (OJT) or classroom training is provided before assigning personnel to new jobs related to ordnance material processing. Records of OJT and classroom training for weapons personnel must be prepared and maintained.

The head of the QA organization will schedule all personnel who will be assigned to perform QA functions into training in the content and application of the quality assurance procedures.

Each supervisor will provide OJT through rotational work assignments to provide increased range and depth to the capability of QA personnel. These periods of OJT should be of a sufficient duration to ensure that the trainee is fully qualified to perform his or her duties in that area of assignment.

CALIBRATION OF TEST AND MEASURING EQUIPMENT

QA must ensure that only currently calibrated test and measuring equipment is used to record or generate quantitative measurements or data during maintenance actions. Each QA inspector should verify that calibration labels and tags are affixed to all test and measuring equipment within his or her work area. The labels and tags must indicate that the equipment is in an "in-calibration" status or does not require calibration. Any discrepancies noted should be documented.

QA personnel should perform daily monitoring within each work area to ensure that only those gauges authorized for use by the ordnance work instructions are being used or are available for use by weapons personnel and that the gauges display current evidence of calibration. During these daily monitoring actions, QA should verify that all activity organizational elements properly use, handle, and stow these gauges.

QUALITY DEFICIENCY REPORTING

Information feedback is needed for corrective action purposes when deficiencies are found in material received as serviceable (RFI) from other activities or from the supply system. NAVMATINST 4855.8 establishes a DoD system for reporting quality deficiency data and provides the reporting procedures and forms for this purpose.

Quality deficiency reports are submitted to a screening point within the activity originating the report. Here, the responsible action point (activity responsible for resolution of the deficiency) is determined and the report is forwarded to that action point. Complete instructions on quality deficiency reporting are contained in NAVMATINST 4855.8. Only Category I reports will be addressed in this text.

A Category I report is submitted when a deficiency is found that might affect life or limb of personnel or impair the combat capabilities of the using organization or individual. Deficiencies that affect an operational capability to the extent that accomplishment of the mission is jeopardized are included in Category I.

Category I reports must be submitted by message. When urgency dictates, reports may first be transmitted by the most expeditious means available (e.g., telephone or local visits). Oral communications must be confirmed by a message. Information copies of Category I reports may be submitted to any activity considered necessary to alert them to the problem.

The originator of the Category I report must forward the report to the designated screening point within 24 hours after discovery of the deficiency. The report must be screened for completeness and accuracy and forwarded to the appropriate action point within 48 hours after receipt. The component or activity responsible for action must acknowledge receipt of each report to the screening activity within 24 hours.

SAFETY

LEARNING OBJECTIVES: Discuss the importance of observing proper safety procedures when working on naval gun systems and ordnance.

The primary reason for the vast amount of information available on the subject of safety precautions is simply the desire to prevent accidents. Research has shown that a majority of all accidents came about through sheer carelessness. Not only is there a loss of time involved in an accident but there is also an accompanying loss of equipment, material, or, in the extreme case, life itself. Aside from these important considerations, there is a vast amount of money wasted in replacing damaged equipment, making investigations, paying for hospitalization or funerals, and for man-hours not worked during convalescence. These are but a few of the problems faced everyday by the Navy because personnel fail to heed the posted and required safety precautions.

Safety is everybody's job. Awareness of danger, knowledge of how to avoid it, and constant vigilance are the three basic requirements for the prevention of accidents while you are working on or operating ordnance equipment.

Safety is both a result and a reflection of good training. The crews of a gun mount maybe trained so that they know how to do their jobs; however, the crew still cannot be considered well trained unless each of them is safety conscious. Safe working habits must be impressed upon every crew member through proper instructions, constant drills, and continuous supervision. Carelessness, cockiness, and lack of training have led to disaster while working with all types of ordnance equipment and materials.

Practical safety features are incorporated into Navy equipment to eliminate potential hazards to personnel. Since familiarity with equipment leads to carelessness, observation of all safety notices and rules is mandatory. No relaxation of vigilance should ever be permitted.

Each piece of ordnance equipment has a specific list of safety precautions to be observed during operation and/or maintenance. Study these thoroughly before attempting to operate or repair any piece of equipment that you are not familiar with.

The following safety rules are but a few of the many that must be observed when operating or working on hydraulic or pneumatic systems:

- Never disconnect hydraulic lines or disassemble hydraulic equipment when the hydraulic system power motor is running.

- Never disconnect hydraulic lines or disassembly hydraulic equipment until the accumulators have been manually dumped to the tank.

- Never manually actuate switches, solenoids, relays, or valves on hydraulic systems under pressure unless you are competent and qualified to perform these actions.

- Report hydraulic leaks immediately so that they may be repaired at the first opportunity.

- If clothing becomes drenched with hydraulic fluid, immediately change into dry clothing. Hydraulic fluid is injurious to health when in prolonged contact with the skin. It is also a fire hazard. Immediately wipe up all spilled fluid.

- Do not direct a high-pressure air jet at any part of the human body; this may be fatal.

All personnel taking part in and observing operation of power equipment must remain alert, keep clear of moving parts, and be thoroughly familiar with the safety precautions applicable to that equipment. At no time should skylarking be allowed in the vicinity of operating power equipment.

Hydraulic systems operate under hydraulic pressures ranging from approximately 100 psi to 2,000 psi. Some pneumatic systems operate in approximately the same range of pressures as hydraulics. These pressures are dangerous and can be hazardous to personnel.

Safety precautions must be observed when performing maintenance, testing, and operating ordnance hydraulic and pneumatic equipment. The high-pressure liquid or air can cause major injuries to your face, hands, and other parts of the body by jets of air or liquid escaping from valves or pipe connections that are highly pressurized.

The following summary of safety precautions is intended to be general in nature, but its importance should not be misunderstood:

- Do not service or adjust live equipment without the presence of another person capable of rendering first aid.

- Never measure potentials over 600 volts by means of flexible test leads.

- Do not tamper with interlocks or any other equipment safety feature.

- If possible, use only one hand when working on live circuits.

- Never use electrical or electronic equipment known to be in poor condition.

- Do not allow unqualified personnel to operate the control panels. Trainees or other persons undergoing instructions should be allowed to operate control panels only under the strict supervision of a qualified and responsible operator.

- Except for general quarters, always sound the train warning bell and get an all-clear signal before training and/or elevating the gun mount (before each time the equipment is to be moved).

Whenever any power drive unit that is capable of inflicting injury to personnel or material not continuously visible to the person controlling such motion is moved, the officer or petty officer authorizing the unit to be moved by power must ensure a safety watch. The on-deck safety watch is not necessary during general quarters but must be maintained in areas where such injury is possible, both inside and outside the unit being moved. There should be a telephone or other effective voice communications established and maintained between the station controlling the unit and the safety watch.

The following are a few basic rules that you should keep in mind when using wrenches:

- Always use a wrench that fits the nut properly.

- Keep wrenches clean and free from oil. Otherwise, they may slip, resulting in possible serious injury to you or damage to the work.

- Do not increase the leverage of a wrench by placing a pipe over the handle. Increased leverage may damage the wrench or the work.

- Provide some sort of kit or case for all wrenches. Return them to it at the completion of each job. This saves time and trouble and facilitates selection of tools for the next job. Most important, it eliminates the possibility of leaving them where they can cause injury or damage to personnel or equipment.

- Determine which way a nut should be turned before trying to loosen it. Most nuts are turned counterclockwise for removal. This may seem obvious, but even experienced personnel have been observed straining at the wrench in the tightening direction when they wanted to loosen it.

- Learn to select your wrenches to fit the type of work you are doing. If you are not familiar with these wrenches, make arrangements to visit a shop that has most of them and get acquainted.

The following precautions should be observed when using torque wrenches:

- Do not use the torque wrench as a hammer.

- When using the micrometer-setting type, do not move the setting handle below the lowest torque setting. However, it should be placed at its lowest setting before being stowed.

- Do not use the torque wrench to apply greater amounts of torque than its rated capacity.

- Do not use the torque wrench to break loose bolts that have been previously tightened.

- Never stow a torque wrench in a toolbox or in an area where it maybe damaged.

Be thoroughly familiar with all posted safety precautions and those listed in the OP pertaining to the equipment to which you are assigned.

Do not think that once you have learned all applicable safety precautions you can sit back and take things easy. Review the precautions periodically, particularly those for jobs seldom performed. Try to improve upon any rules in effect. Safety is everyone's responsibility, not just those who developed the regulations. Most accidents are caused by personnel who are so familiar with their job they think they can take shortcuts; by personnel who do not know the applicable precautions; by practical jokers; or, in the majority of instances, by plain carelessness.

PMS SAFETY

As in all other evolutions, the observance of proper safety procedures is also an important consideration when performing PMS. It is extremely important that personnel involved in maintenance are thoroughly trained in safety practices. Nothing can replace good common sense when performing any kind of task, but awareness of the specific hazards of a given job will save lives and prevent damage to equipment. Maintenance Requirement Cards (MRCs) have warnings and cautions inserted immediately before the procedural step they apply to and should be obeyed as closely as possible. Any discrepancies or inadequacies in PMS safety procedures should be reported immediately via an urgent PMS Feedback Report. *Navy Safety Precautions for Forces Afloat* (OPNAVINST 5100) contains safety instructions and precautions to be used when performing PMS.

SPECIAL SAFETY MARKINGS

Index marks and safety lines are painted on or near ordnance equipment and are used by the GM to indicate a complete mechanical function and to indicate safe areas.

An example of the index mark is the breech-closed index painted on the gun housing (fig. 12-16). The index mark shows at once whether the breechblock rises promptly to full breech-closed position, or is sluggish, or sticks. Some guns also have index marks on the housing and slide to indicate full return to the battery. These index marks tend to wear off and require periodical freshening up. Be careful not to get the paint on any other part of the sliding surfaces.

Safety lines mark off safe working areas. Circular safety lines are painted on the deck around a gun mount to indicate the areas you should stay out of when the gun is being trained. "Blast area" lines are painted on the decks around rocket launchers to show how far away you must get to be safe from the hot-rocket blasts. Similar safety lines are necessary to show safe working areas around overhead conveyors and other machines that may be dangerous to personnel who fail to keep away from working parts.

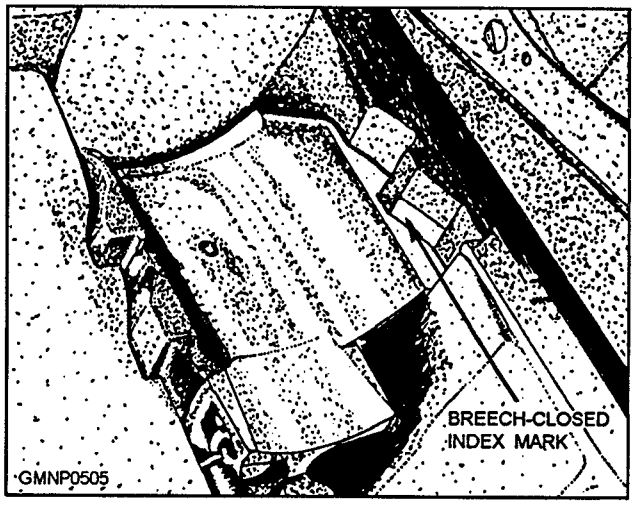

Figure 12-16.—Breech-closed index mark.

SUMMARY

Gun maintenance involves a wide variety of skills and knowledge. However, all of the skill and knowledge in the world are useless without a high degree of personal dedication to your job and the people around you. The dangers involved in gunnery are readily apparent. Your vigilance as a maintenance technician may well make the difference between a successful gunshoot or missile launch and a catastrophic accident. Take the time to learn your system and never assume anything.

In this chapter we have discussed the various maintenance requirements involved in keeping a gun and missile system operational. We described the important foundational role preventive maintenance plays in both system readiness and your personal development as a technician. We described the lubricants and tools used in routine maintenance as well as the reference publications that provide in-depth information about the operation, upkeep, and repair of your gun or launcher. We described some specific maintenance actions that you will be involved in, such as barrel maintenance, replacement of hydraulic seals, and mechanical adjustments. We also discussed some maintenance-related safety precautions. We concluded with a brief discussion of PMS, quality assurance, and safety.

CHAPTER 13

ADMINISTRATION AND TRAINING

As you have already discovered, there is much more to being an LPO or LCPO than just telling people what to do. As you advance, you become more knowledgeable about the way your command operates on a daily basis. You also become more involved in the administrative aspects of the management process. This process, of course, goes far beyond 3-M reporting or logging daily magazine temperatures. In this chapter we will acquaint you with some of the more important administrative procedures you may become involved with as a senior Gunner's Mate.

CORRECTIVE MAINTENANCE MANAGEMENT

LEARNING OBJECTIVES: Describe the cause and effect of corrective maintenance.

Many people operate under the philosophy "If it's broke—fix it; if it works—leave it alone." However, this attitude defeats the purpose of discrepancy trend analysis. In other words, you should closely monitor the documented histories of your equipment. You should then be able to predict potential problems or breakdowns based upon your knowledge and familiarity of that equipment. This practice could enable you to spot recurring equipment tendencies and prevent discrepancies before they occur. You are then accomplishing the purpose of performing preventive maintenance.

CURRENT SHIP'S MAINTENANCE PROJECT

One of the best aids in identifying material discrepancy trends is through the use of the Current Ship's Maintenance Project (CSMP). All levels of management can use the CSMP. The work center supervisor, up through the type commander, can use it for such purposes as operational scheduling, overhaul work packages, and availabilities. Above all, they can use it as a means of identifying trouble areas within a particular unit, system, or even component. We will not show you how to maintain a CSMP;, you should already know how to do that. A properly maintained historical record of the equipment you are responsible for may prove to be a highly invaluable tool in its upkeep.

3-M SYSTEMS' CENTRAL DATA BANK

Did you ever wonder where all that data you submit on an OPNAV 4790.2K ends up? One important destination for this information is the 3-M Systems' Central Data Bank located in Mechanicsburg, Pennsylvania. The Naval Maintenance Support Office (NAMSO), which is a subordinate department of the Naval Sea Logistics Center (NAVSEALOGCEN), maintains this data bank. Fleet personnel submit MDS reports, such as work requests, deferrals, configuration changes, and failed-parts reports. They are then entered into this data bank. This data is then made available to whomever requests the information. This bank is the source of most of the 3-M reports that are sent to ships, other levels of naval management, and authorized defense contractors. However, these reports are also available to any requesting naval activity. Figure 13-1 shows a completed request form used to obtain 3-M reports from the central data bank. Detailed instructions on how to fill out this request form, as well as a summary and explanation of what reports are available, are located in chapter 4 of the *Ships' 3-M Manual*, OPNAVINST 4790.4.

SYSTEM LOGS AND RECORDS

Another important tool in heading off equipment problems before they happen is through the review of the various system logs and records. It is impractical to list them here because they are covered in some detail in other training manuals. Instead, two examples are provided here to show how a log or record may aid in the trend analysis process.

> While performing bore erosion checks, you notice what you consider an unusual amount of erosion. In checking the fire control smooth log, you verify that this is true-you have more than the usual amount of bore erosion for a given time period and a given amount of rounds fired through the gun. At this point, you may

SHIPS' 3-M DATA REQUEST FORM

GMNP0506

FROM: Commanding Officer POINT OF CONTACT: W.T. Door DATE: 18 Aug 1994

ADDRESS: USS Conway (FF-1099) PHONE NR. (AVN) 375-0001 [X] ROUTINE

FPO Miami, Florida 09587 (COMM) 402-686-0010 [ ] URGENT

Attn: ASW Officer

RPT. NR: NAMSO 4790.S 5046 OPTION 12

PARAMETERS: REPORT TIME FRAME FROM 1 Oct 1986 TO 1 Oct 1987

STMNR	UIC	EIC	APL	WIC	SN
FF-1099	20001	WQE2	12345678901	WS01	00-010-4960
FF-1099	20001	WQE2	23456789012	WS01	00-020-5071
FF-1099	20001	WQE2	34567890123	WS02	00-030-6182
FF-1099	20001	WQE2	45678901234	WS02	00-040-7293

OTHER:

NUMBER OF COPIES: 1 FORMAT: [X] PRINT [ ] FILM [ ] FICHE [ ] TAPE

SHIP VIA: [X] MAIL [ ] FED EXP. [ ] COURIER [ ] PICK-UP

TO: [X] SAME AS ABOVE [ ] OTHER (BELOW)

ADDRESS:

NOTE: REPORTS ARE SENT TO CONTRACTORS ONLY AT REQUEST OF USN COMMANDS.

PURPOSE OR INTENDED USE OF THE DATA:

[X] MAINTENANCE ANALYSIS
[ ] MATERIAL HISTORY
[ ] ENGINEERING ANALYSIS
[ ] MANPOWER ANALYSIS
[X] SUPPLY SUPPORT ANALYSIS
[ ] CONFIGURATION STATUS
[ ] FINANCIAL PLANNING
[X] OTHER (EXPLAIN BELOW)

REMARKS: Effectiveness of Training

(ATTACH ADDITIONAL SHEETS IF NECESSARY)

Figure 13-1.—Ships' 3-M Data Request Form.

decide that the gun needs to be rebarreled at an earlier date than may have already been planned.

You are reviewing magazine temperature records and discover that the forward magazine consistently has a 2° higher daily temperature reading than the after magazine. Is the forward magazine getting warmer than the after magazine? Is one of the magazine thermometers out of proper calibration? These are some of the factors that should be examined and acted upon.

As you can see, your system logs can provide valuable insight into any number of equipment deficiencies or tendencies. Always try to maintain accurate records and logs.

TECHNICAL LIBRARY

Whether you are on a small or large ship, some type of division technical library for technical pubs, reference pubs, training pubs, arid handbooks should exist. The tech library should also have at least one up-to-date copy of each applicable equipment and system technical manual.

As with other publications, you should have a master inventory of the tech library publications. The publication record and inventory card, OPNAV 5070/11 (fig. 13-2), will help the tech library petty officer keep track of publications (issued, on hand, and soon). When changes to publications arrive, you can consult the record cards for the location and quantity of publications requiring changes. Using this card, you can ensure that all publications held receive changes as they should.

(FRONT SIDE)

SHORT TITLE	COPY NUMBERS ON HAND	CLASSIFICATION OF PUBLICATION
LONG TITLE		EFFECTIVE DATE

CHANGE OR CORRECTION	DATE OF ENTRY BY COPY NUMBER									
	1	2	3	4	5	6	7	8	9	10

NWPL CATALOG CARD OPNAV5070/11 (Rev. 9-75) S/N 0107-LF-059-7055

A

(BACK SIDE)

OPNAV 5070/11 (Rev. 9-75) BACK

DISPOSITION OF PUBLICATION						
COPY NO	HOLDER (Signature)	LOCATION	REC'D DATE	RETURN DATE	DESTRUCTION	
					DATE	AUTHORITY

REMARKS

B

GMNP0507

Figure 13-2.—Publication Record and Inventory Card (5x7), OPNAV 5070/11.]

As publications become unusable because of extensive wear and damage, order new publications (and changes) to replace them. Issue these replacements to work center personnel as necessary. To avoid confusion, ensure that the old publications are discarded or destroyed after the new replacement publications have been received. Be sure to follow applicable security requirements when discarding or destroying a publication.

Several methods can be used in maintaining a tech library. NWP-0 and Naval Air Systems Command Technical Manual Program (NAVAIR 00-25-100) contain guidelines for maintaining major technical libraries. Applicable sections of these manuals may provide guidance you can adapt to your local situation.

At least one petty officer should be assigned to maintain the ready reference library (technical library) of your division. A second person should be assigned as a backup so that your tech library will stay current if the assigned librarian is absent.

Another problem of maintaining publications is that of keeping them updated. Of real help to you will be the *Navy Stock List of Publications and Forms, NAVSUP* 2002, and the Ships Technical Publications System (STEPS) products.

NAVSUP 2002

NAVSUP 2002 is a master set of microfiche, issued quarterly, that lists most Navy publications and forms. Each edition supersedes and replaces the previous edition in its entirety. The NAVSUP 2002 contains three major sections:

- Forms
- Publications
- Naval technical directives

This microfiche set provides data, such as canceled, canceled-no superseding stock numbers, canceled-incorporated in basic stock number, "replace by" information, and effective dates.

SHIPS TECHNICAL PUBLICATIONS SYSTEM (STEPS)

The Ships Technical Publications System (STEPS) is also a master set of microfiche. Several STEPS data products are distributed that contain information concerning technical documentation supporting the following general documents:

- Ships selected records
- Ships electronics
- Hull, mechanical, and electrical (HM&E) and ordnance systems
- Equipment under the cognizance of Naval Sea Systems Command (NAVSEA)
- Equipment under the cognizance of Space and Naval Warfare Systems Command (SPAWAR)

PUBLICATION APPLICABILITY LIST (PAL)

The Publication Applicability List (PAL) is one of the products of STEPS. This microfiche set is intended to assist in determining the publication needs of the ship or shore station to which it applies. It is an important tool in identifying the technical manual that you need. The PAL applies to NAVSEA and NAVELEX (SPAWAR) technical manuals for systems and equipments reported to be installed on your ship. It is not a list of publications required for your ship but is a list of publications that apply to your ship. The PAL lists technical manuals two ways—by equipment name and by publication number. If you know one, you can get the other, as well as the publication title of the technical manual. The PAL is organized into four separate volumes, matching the categories of technical manuals aboard ship. These volumes/categories are as follows:

Vol. 1. *General Publications*

Vol. 2. *Electronics*

Vol. 3. *Hull, Mechanical, and Electrical*

Vol. 4. *Weapons*

Volume 1 is not equipment oriented and is in publication number sequence only. Volumes 2, 3, and 4 have two parts so that you can lookup technical manuals either by equipment name or by technical manual publication number.

TECHNICAL MANUAL MANAGEMENT PROGRAM (TMMP)

The *Guide for User Maintenance of NAVSEA Technical Manuals, S0005-AA-GYD-030/TMMP,* has been developed to assist technical manual users in interfacing with the NAVSEA Technical Manual Management Program (TMMP). It also provides specific information in the following areas:

- How to identify what technical manuals are needed
- How and from what activity to request technical manuals
- How technical manual deficiencies are reported
- How technical manual deficiency reports are processed
- How to update (through changes or new publication) technical manuals
- How to determine whether technical manuals are current
- What must be done upon receipt of technical manuals in hard copy or microfiche form

TECHNICAL MANUAL IDENTIFICATION NUMBERING SYSTEM (TMINS)

Another publication you will need for operating a technical library is the *Technical Manual Identification Numbering System (TMINS) Application Guide and Index,* M0000-00-IDX-000/TMINS. This publication serves as the sole reference handbook for all component commands involved with the composition, construction, interpretation, or assignment of technical manuals or

associated technical document identification numbers. This guide will help you understand how the TMINS numbers apply to the new publication numbering system.

COMBAT SYSTEMS READINESS

LEARNING OBJECTIVES: Discuss the importance of a Combat System Readiness Review (CSRR).

Before deployment, a ship undergoes several different evolutions in preparation for that deployment. One of the more important processes is the performance of a Combat Systems Readiness Review (CSRR) or a Combat Systems Readiness Test (CSRT). As directed by the appropriate type commander, a CSRR is conducted aboard surface ships in the Atlantic Fleet, while Pacific Fleet surface ships receive a CSRT. Basically, the two programs are the same with only minor technical and administrative differences. For the purpose of explanation, the COMNAVSURFLANT CSRR procedures will be described in this text.

Primarily, the CSRR is conducted to assist ship's force in achieving the maximum level of combat systems readiness and efficiency attainable immediately before deployment. Additionally, the CSRR should assist ship's force personnel in correcting material problems and provide on-the-job training to improve mission self-sufficiency. The systems and subsystems evaluated (tested) during CSRR are listed in table 13-1. A CSRR is conducted approximately 60 to 120 days before a ship's deployment, and depending upon the class of ship being tested, requires 5 to 10 working days to complete. A CSRR on a Naval Reserve Force ship is conducted approximately 30 to 60 days before Refresher 'Mining (REFTRA).

An important part of the CSRR is the software review portion of the test. "Software," for the purposes of the CSRR, is defined as test equipment, technical documentation, and supply documentation. The software review phase may include performance of the following:

- **GPETESAT.** A review of the ship's general- and special-purpose electronic test equipment, including calibration status.

Table 13-1.—Equipment Evaluated During CSRR

SYSTEMS
Surface Missile (and associated Fire Control Equipment)
Gun (and associated Fire Control Equipment)
Antisubmarine Warfare Batteries (and associated Fire Control Equipment)
Navy Tactical Data System
Electronic Warfare
Search Radar
Target Interrogator (IFF)
Communications
Navigation Aids
SUBSYSTEMS
Interior Communications
Dry Air
400 Hz Power
Radar Cooling
Antennas
Sonar Dome Pressurization

- **PUBSAT.** A comparison of the ship's publication inventory (including the latest changes and revisions) with the Publication Applicability List (PAL).
- **LOGSAT.** A review of the ship's COSAL, APLs/AELs, and selected repair parts.
- **A review** of configuration and field changes applicable to the equipment necessary to support performance of the required operability tests.

The software review is conducted by the appropriate NAVSEACEN before the functional equipment testing phase of the CSRR.

The operational testing portion of the CSRR is accomplished using current equipment PMS checks as well as any other existing equipment level tests that may be necessary.

At the conclusion of the CSRR, the type commander and any applicable addressees are notified of test results via the "Quick Look" message format. Additionally, all

parties concerned are provided with a CSRR Detailed Discrepancy Report (fig. 13-3) and a CSRR Summary Report (fig. 13-4).

It is important that you become actively involved in an assigned CSRR/CSRT. It is an excellent means of identifying fictional and procedural deficiencies that may exist within your equipment or work centers. Detailed guidelines for CSRR/CSRT procedures are contained in COMNAVSURFLANT(PAC) INST 9093.1.

CASUALTY REPORT (CASREP) SYSTEM

LEARNING OBJECTIVES: Discuss and demonstrate a working knowledge of the casualty report system.

As the LPO or LCPO, the number of systems and ancillary equipment you become involved with is going to increase. Because of such factors as lack of experienced personnel, lack of repair parts, or a need of technical assistance, equipment may remain inoperative or damaged for extended periods of time. To alleviate these situations, the Navy has developed a system of repining and monitoring equipment casualties.

The casualty report (CASREP) system has been designed to support the Chief of Naval Operations and fleet commanders in the management of assigned forces. The effective use and support of Navy forces require an up-to-date, accurate operational status for each unit. An important part of operational status is casualty information. With this system, Navy managers are kept aware of when we need such things as repair parts or assistance to maintain maximum equipment efficiency. When casualties are reported, operational commanders and support personnel are alerted to the status of significant equipment malfunctions that may result in the degradation of a unit's readiness. The CASREP also reports the unit's need for technical assistance and/or replacement parts to correct the casualty. Once a CASREP is submitted, CNO, fleet commanders in chief (FLTCINCs), and the Ships Parts Control Center (SPCC) receive a hard copy of the message. Additionally, the CASREP message is automatically entered into the Navy Status of Forces

COMBAT SYSTEMS READINESS REVIEW
DETAILED DISCREPANCY REPORT

USS _____

EQUIPMENT/SYSTEM	MK/MOD	SERIAL NO.	TEST ENGINEER/TECHNICIAN AND COMMAND OR COMPANY	DATE

TEST	(CHECK ONE) SAT	UNSAT	DEFICIENCY ENCOUNTERED	CORRECTIVE ACTION RECOMMENDED/TAKEN	BY	(CHECK ONE) MINOR	MAJOR

PAGE____OF_____PAGES

GMNP0508

Figure 13-3.—CSRR Detailed Discrepancy Report.

COMBAT SYSTEMS READINESS REVIEW
SUMMARY REPORT

SHIP USS _____ SYSTEM / EQUIPMENT _____ DATE _____

SHIP LOCATION _____ TEST ENGINEER / TECHNICIAN _____ OF _____

DEFICIENCIES DISCOVERED: YES ____ NO ____

NO. OF MAJOR ____ NO. CORRECTED ____ NO. OF MINOR ____ NO. CORRECTED ____

CURRENT STATUS: FULLY OPERATIONAL ____ MARGINALLY OPERATIONAL (EXPLAIN) ____

NON-OPERATIONAL (EXPLAIN BELOW) ____ CASREPT (DATE / TIME GROUP) ____ CASREPT (SER. NO.) ____

MAJOR DEFICIENCIES REMAINING:
(LIST CASUALTY AND RESULTING SYSTEM LIMITATIONS)

TEST PLAN ADEQUACY: SAT. ☐ UNSAT ☐ (EXPLAIN)

GMNP0509

Figure 13-4.—CSRR Summary Report.

data base at each FLTCINC site, and follow-up messages are forwarded to the CNO database.

As CASREPs are submitted, managers are able to monitor the current status of each outstanding casualty. Through the use of high-speed computers, managers are able to collect data concerning the history of malfunctions and effects on readiness. This data is essential to the maintenance and support of units dispersed throughout the world.

Unit commanders should be aware that alerting seniors to their unit's operational limitations, brought about by equipment casualties, is important in expediting receipt of replacement parts and in obtaining technical assistance. Both of these functions of CASREP are necessary to provide the information needed in the realm of command and control of U.S. Navy Forces and to maintain the units in a truly combat ready status. Unit commanders should not delay or withhold reports to maintain the unit's readiness rating artificially at a higher than actual level. Support from every level, including intermediate and unit commanders, is essential to maintaining the highest level of combat readiness throughout the Navy.

A "casualty" is defined as an equipment malfunction or deficiency that cannot be connected within 48 hours and falls into one or more of the following categories:

1. Reduce the unit's ability to perform a primary mission.

2. Reduce the unit's ability to perform a secondary mission (casualties affecting secondary mission areas are limited to Casualty Category 2).

3. Reduce a training command's ability to provide a major segment of its program and cannot be corrected relatively quickly by local action alone.

TYPES OF CASREPS

The CASREP system contains four different types of reports: **INITIAL, UPDATE, CORRECT,** and **CANCEL.** These reports of equipment casualties are submitted using a combination of two or more messages, depending on the situation and contributing factors. These four types of reports are described in the following paragraphs,

P 151744ZAPR82

FM USS KITTY HAWK

TO COMSECONDFLT
CTG TWO ZERO PT TWO
COMNAVAIRLANT NORFOLK VA
NAVSSES PHILADELPHIA PA

INFO AIG SIX EIGHT FOUR THREE
NAVSEADET NORFOLK VA
NUSC NEWPORT RI
COMNAVELEXSYSCOM WASHINGTON DC
NAVSHIPWPNSYSENGSTA PORT HUENEME CA

BT

C O N F I D E N T I A L

MSGID/CASREP/CV 63 KITTY HAWK/27//

POSIT/4530N2–04645W9/15615ZAPR82//

CASUALTY/INITIAL–82012/NO 1 OXYGEN ANAL/EIC:F300/CAT:2//

ESTIMATE/302359ZMAY82/RECEIPT OF PARTS NLT 28MAY82//

ASSIST/OTHER/PHILADELPHIA//

AMPN/REQUEST ASSISTANCE FROM NAVSSES PHILA//

PARTSID/APL:490002/–/JCN:N03363–EB01–0802//

TECHPUB/NAVSEA 0956-LP-023-0810//

1PARTS

/DL	NATIONAL STOCK NO.	ROD	COSAL	ONBD	CIRCUIT
/01	9H5930–01–050–6624	001	000	000	–
/02	9H6630–01–049–0947	001	000	000	–//

AMPX/REASON ITEM NOT ON BOARD–NO ALLOWANCE ALL PARTS LISTED IN PARTSID APL//

1STRIP

/DL	DOCUMENT ID	QTY	PRI	RDD	ACTIVITY	REQUISITION STATUS
/01	V03363–0094–W400	001	05	149	NNZ	131601ZAPR82
/02	V03363–0094–W401	001	05	149	NNZ	131601ZAPR82

RMKS/ANALYZER FAILS TO GIVE ACCURATE CONTINUOUS READOUTS.

CAUSING COMPLETE LOSS OF OXYGEN MONITORING CAPABILITY. CAUSES DELIEVED TO BE COMBINED ENVIRONMENT {HEAT AND HUMIDITY OF FIREROOMS} AND PARTS FAILURE. OXYGEN MONITORS HAVE NOT WORKED PROPERLY SINCE INSTALLATION DURING ROH 80. NAVSSES PROVIDED TECH ASSISTANCE IN JULY 1980. SHIP'S FORCE INSPECTION HAS NOW REVEALED HOLES IN BOTH TEFLON MEMBRANCES.

SHIPS SCHEDULE: INPORT PHILADELPHIA 14 MAY–12 JUN. CONSIDER 28–30 MAY IDEAL TIME TO OBSERVE UNITS IN OPERATION DUE TO INTENDED LIGHTOFF 28 MAY AFTER IMAV//

DWNGRADE/DECL 30NOV82//

BT

{CLASSIFIED FOR ILLUSTRATIVE PURPOSES ONLY}

Figure 13-5.—Example of an INITIAL CASREP message.

The INITIAL CASREP

The **INITIAL CASREP** (fig. 13-5) identifies, to an appropriate level of detail, the status of the casualty, repair parts (if any are required), and whatever assistance may be necessary. This information is essential to allow operational and staff authorities to apply the proper priority to necessary resources. Each Initial CASREP should contain a **CASUALTY** set, followed by one or more sets that convey information concerning that casualty. Further explanation of the message sets is provided later in this chapter. An Initial CASREP should be submitted using the following criteria:

1. An Initial CASREP may be submitted if a unit is in need of outside assistance only; that is, no parts are required to correct an equipment casualty.

2. When a casualty results from inadequate general-purpose electronic test equipment (GPETE) or preventive maintenance (PMS). The affected system should be the subject of the Initial CASREP with GPETE or PMS reported as the cause in an **AMPN** set.

3. An **ASSIST** set should be used to report whether or not a unit requires outside assistance to repair an equipment casualty.

4. When a unit requires assistance and/or parts to repair a casualty, scheduling information should be reported in the **RMKS** set for a full 30-day period, commencing on the earliest date that the unit can receive the assistance and/or parts. In addition to the scheduling information, the unit commander may also report any effect the casualty is expected to have on the unit's employment during the 30-day period.

5. An Initial CASREP is used to report the occurrence of a significant equipment casualty and provides specific information concerning repair of the casualty.

6. Only one initial casualty should be submitted in the Initial CASREP; best estimates for unavailable data should be included in the Initial CASREP and corrected as soon as possible in an Update CASREP.

The UPDATE CASREP

An **UPDATE CASREP** (fig. 13-6) is used to report information similar to that in the Initial CASREP. With

```
P 201234ZAPR82
FM          USS SARATOGA
TO          COMSECONDFLT
            CTG TWO ONE PT ONE
            COMNAVAIRLANT NORFOLK VA
INFO        AIG SIX EIGHT FOUR THREE
            NAVSEC NORFOLK VA
            NUSC NEWPORT RI
            COMNAVELEXSYSCOM WASHINGTON DC
            NAVSHIPWPNSYSENGSTA PORT HUENEME CA
BT
C O N F I D E N T I A L
MSGID/CASREP/CV 60 SARATOGA/69//
POSIT/MAYPORT/201130ZAPR82//
REF/CASREP/SARATOGA/191130ZAPR82//
CASUALTY/UPDATE-03-82061/AN-SPN-43A RADAR SET/EIC:PD04/CAT:4//
ESTIMATE/212200ZAPR82//
AMPN/ALL PARTS RECEIVE 201000ZAPR82 REPAIRS IN PROGRESS//
REF/CASREP/SARATOGA/191330ZAPR82//
CASUALTY/UPDATE-01-82062/AN-URC-35 RADIO SET/EIC:QDB5/CAT:3//
ESTIMATE/261200ZAPR82//
REF/CASREP/SARATOGA/201800ZAPR82//
CASUALTY/UPDATE-01-82065/AN-SPA-25 RADAR REPEATER/EIC:P704/CAT:3//
DWNGRADE/DECL 20OCT82//
BT
                    {CLASSIFIED FOR ILLUSTRATIVE PURPOSES ONLY}
```

Figure 13-6.—Example of an UPDATE CASREP message.

the exception of the **CASUALTY** and **ESTIMATE** sets, only previously unreported casualty information or information that has changed (or was reported in error) need be reported. Information in a previously reported data set may be changed by merely submitting the same data set again with the corrected information except for the **ASSIST, 1PARTS,** and **1STRIP** sets. An Update CASREP should be submitted using the following criteria

1. There is a need to complete any information reporting requirements or to revise previously submitted information.

2. The casualty situation changes; that is, the estimated repair date has changed, parts status has

P 141735Z MAY 82

FM USS KITTY HAWK

TO COMSECONDFLT
CTG TWO ZERO PT TWO
COMNAVAIRLANT NORFOLK VA
NAVSSES PHILADELPHIA PA

INFO AIG SIX EIGHT FOUR THREE
NAVSEC NORFOLK VA
COMNAVELEXSYSCOM WASHINGTON DC
NAVSHIPWPNSYSENGSTA PORT HUENEME CA

BT

C O N F I D E N T I A L

MSGID/CASREP/CV 63 KITTY HAWK/28//

POSIT/PHILADELPHIA/141715ZMAY82//

REF/CASREP/KITTY HAWK/151744ZAPR82//

CASUALTY/UPDATE–01–82012/NO 1 OXYGEN ANAL/EIC:F300/CAT:2//

ESTIMATE/302359ZMAY82/RECEIPT OF PARTS NLT 28MAY82//

AMPN/PARTS ORDERED PREVIOUSLY HAVE BEEN RECEIVED. REPAIRS CANNOT BE COMPLETED UNTIL ADDITIONAL PARTS ARE RECEIVED//

CHANGE/1PARTS

/DL	NATIONAL STOCK NO.	ROD	COSAL	ONBD	CIRCUIT
/03	UNKNOWN	002	000	000	–
/04	UNKNOWN	00L	000	000	–//

AMPN/DL03–DL04 REASON ITEMS NOT ON BOARD–NO ALLOWANCE. PARTS NUMBERS PROVIDED BY NAVSSES PHILA. DL03 PART NO. 098–022, DL04 PART NO. 098–008 APL DL03 49001 DL04 49002//

CHANGE/1STRIP

/DL	DOCUMENT ID	QTY	PRI	RDD	ACTIVITY	REQUISITION STATUS
/03	V03363–0094–W402	002	05	149	NNZ	131403ZMAY82
/04	V03363–0094–W403	001	05	149	NNZ	13L404ZMAY82

RMKS/NAVSSES TECH REP IDENTIFIED ADDITIONAL PARTS REQUIRED. NL CHANGE IN REPAIR SCHEDULE AT THIS TIME.//

DWNGRADE/DECL 14DEC82//

BT

{CLASSIFIED FOR ILLUSTRATIVE PURPOSES ONLY}

Figure 13-7.—Example of a multiple UPDATE CASREP message.

changed significantly, additional assistance is required, and so forth.

3. Additional malfunctions are discovered in the same equipment.

4. All parts ordered to repair the equipment have been received.

5. Upon receipt of any significant part or equipment, inclusion of the date of receipt is required in the message.

There should only be one outstanding CASREP for each item of equipment. Additional problems or malfunctions on the same item should be reported using an Update CASREP and do not require the submission of a new Initial CASREP.

Each casualty being updated in an Update CASREP should begin with a **CASUALTY** set, followed by one or more sets that convey information concerning that casualty. An **AMPN** set should be used (immediately following the **ESTIMATE** set) to report the receipt of parts previously reported as being required to repair a casualty.

Figure 13-7 shows an example of a multiple Update CASREP message. This type of update maybe used when a number of outstanding CASREPs remain uncorrected for various reasons.

The CORRECT CASREP

A **CORRECT CASREP** (fig. 13-8) is submitted when equipment that has been the subject of a casualty report is repaired and back in operational condition. CASREPs that report the correction of a casualty situation should include the following information in an **AMPN** set:

1. The delay, expressed in hours, in correcting the casualty because of parts unavailability caused by the supply system

2. A final parts status, including a list of all parts requested and the dates they were received

3. The number of man-hours expended in correcting the casualty

```
P 010914ZJUN82
FM          USS KITTY HAWK
TO          COMSECONDFLT
            CTG TWO ZERO PT TWO
            COMNAVAIRLANT NORFOLK VA
INFO        AIG SIX EIGHT FOUR THREE
            NUSC NEWPORT RI
            COMNAVELEXSYSCOM WASHINGTON DC
            NAVSHIPWPNSYSENGSTA PORT HUENEME CA
BT
C O N F I D E N T I A L
MSGID/CASREP/CV 63 KITTY HAWK/29//
POSIT/PHILADELPHIA/010800ZJUN82//
REF/CASUALTY/KITTY HAWK/151744ZAPR82//
CASUALTY/CORRECT–82012/NO 1 OXYGEN ANAL/EIC:F300/CAT:2//
AMPN/TEN HOUR DELAY IN RECEIPT OF PARTS. 138 MANHOURS EXPENDED TO CORRECT.
PARTS RECEIVED
LIST:       DL01 132044ZMAY82        DL02 132044ZMAY82
            DL03 142230ZMAY82        DL04 142230ZMAY82//
DWNGRADE/DECL 01DEC82//
BT
                {CLASSIFIED FOR ILLUSTRATIVE PURPOSES ONLY}
```

Figure 13-8.—Example of a CORRECT CASREP message.

The CANCEL CASREP

A **CANCEL CASREP** (fig. 13-9) is submitted when equipment that has been the subject of casualty reporting is scheduled to be repaired during an overhaul period or other scheduled availability. Outstanding casualties that are not to be repaired during such availability should not be canceled and remain subject to normal follow-up procedures. The reason for cancellation (i.e., the scheduled availability, including location and date during which a casualty is expected to be repaired) should be identified in an **AMPN** set immediately following the **CASUALTY** set.

As you can see by the example CASREP messages, the addressees listed are commands and activities that are concerned with your unit's casualty. They may be the commands or activities that will expedite any assistance or support required. These addressees will vary with major geographical locations (Pacific, Atlantic, Mediterranean, etc.). The senior operational commander, immediate operational commander, and cognizant type commander should be the action addressees on all CASREPs. The appropriate aviation type commander should be included as an information addressee on all CASREPs from naval air stations and facilities. Certain other addressees are required to be included as information addressees when the CASREP deals with specific equipment types. These addressees are identified in NWP 10-1-10.

You should use the appropriate AIG (address indicating group) for information addresses. Other special action addressees and information addressees dictated by fleet commanders, type, or other operational commanders will be included. The communications and operations officers of your unit can provide you with the required addressees you will need when submitting a CASREP.

CASUALTY CATEGORIES

A casualty category is associated with each reported equipment casualty. Categories 2,3, and 4 (category 1 is not used) reflect the operational urgency or priority of the casualty. The casualty category, although not a readiness rating, is directly related to the unit's equipment readiness (this information is explained in OPNAVINST C3501.66, UNITREP) in those primary and/or secondary missions that are affected by the casualty.

The casualty category (2, 3, or 4) is based upon the specific casualty situation being reported and may not necessarily agree with the unit's overall readiness status. The casualty category is reported in the **CASUALTY** set and is required in all CASREPs.

```
R 281923ZSEP82
FM          USS KITTY HAWK
TO          COMTHIRDFLT
            COMNAVAIRPAC SAN DIEGO CA
INFO        AIG SIX EIGHT FOUR TWO
            COMNAVSEACENPAC SAN DIEGO CA
            NAVSEC PHILADELPHIA PA
BT
C O N F I D E N T I A L
MSGID/CASREP/CV 63 KITTY HAWK/34//
POSIT/SAN DIEGO/281815ZSEP82//
REF/CASREP/KITTY HAWK/201923ZSEP82//
CASUALTY/CANCEL–82022/NO 18 MAIN FEED PUMP/EIC:P162/CAT:2//
AMPN/REPAIRS TO BE COMPLETED BY SHIPYARD WORKERS DURING RESTRICTED
AVAILABILITY SCHEDULED FROM 15OCT82 TO 10JAN83//
DWNGRADE/DECL 28MAR83//
BT
                {CLASSIFIED FOR ILLUSTRATIVE PURPOSES ONLY}
```

Figure 13-9.—Example of a CANCEL CASREP message.

The selected casualty category should never be worse than a mission area M-rating reported through UNITREP for the primary missions affected by the casualty. Table 13-2 shows the criteria for determining the casualty category.

CASREP MESSAGE FORMAT

A CASREP message consists of one or more data sets that convey suffiicient information, to satisfy the requirements of a particular casualty reporting situation. These data sets are preceded by a standard Navy message header consisting of precedence, addressees, and classification. Specific guidelines for both the message header and data sets to be used are contained in NWP-10-1-10, Operational Reports. This publication also provides detailed information for typing each kind of casualty report (INITIAL, UPDATE, CORRECT, or CANCEL) with examples of different CASREP situations and how to submit the applicable report for each.

A CASREP message will always be serialized. This serialization will be the **MSGID** (message identification) set, which appears immediately after the message classification line. The serial numbers are sequential from 1 through 999 for every CASREP originated by a unit. These serial numbers should never be repeated until a new sequence of 1 through 999 has begun. Anew sequence of numbers starts after the unit has submitted CASREP message number 999.

The date-time-group (DTG) of the message transmission is the effective time ("as of" time) of the CASREP. Follow-up CASREP messages (UPDATE, CORRECT, or CANCEL) should reference the INITIAL CASREP message DTG.

Because of the importance and priority of CASREP message transmission, these messages should be transmitted even under communications MINIMIZE conditions. The standard naval telecommunications systems (NTS) service procedures are used in correcting any messages having transmission errors.

Refer again to the example messages shown in figures 13-5 through 13-9. Notice that many data sets (such as **MSGID, POSIT,** and **REF)** are used in the CASREP messages. The following is a list of authorized data sets as they are used in submitting CASREP messages:

DATA SET	BRIEF DESCRIPTION
AMPN	Provide amplifying information concerning the immediately preceding set.
ASSIST	Report the requirement for outside assistance.

Table 13-2.—Casualty Categories and Criteria

CASUALTY CATEGORY	EQUIPMENT CRITERIA
*2	a. A deficiency exists in mission essential equipment which causes a minor degradation in any primary mission, or a major degradation or total loss of a secondary mission.* b. The unit must have reported an Equipment Readiness Resource-Specific Rating of 2, 3, or 4 in primary missions affected by this casualty.
3	a. A deficiency exists in mission essential equipment which causes a major degradation but not the loss of a primary mission. b. The unit must have reported an Equipment Readiness Resource-Specific Rating of 3 or 4 for a primary mission affected by this casualty.
4	a. A deficiency exists in mission essential equipment that is worse than casualty category 3, and causes a loss of at least one primary mission. b. The unit must have reported an Equipment Readiness Resource-Specific Rating of 4 for a primary mission affected by this casualty.
*Casualties affecting a secondary mission will always have a Casualty Category of 2.	

CASUALTY Identify the type of casualty and the equipment suffering the casualty.

CHANGE Report changed information in columnar data sets (1PARTS and 1STRIP) only.

DELETE Remove selected CASREP data from the unit's record. **DELETE** may be used only with the **ASSIST, 1PARTS,** and **1STRIP** sets.

DWNGRADE Provide declassification and/or downgrading instructions for classified messages.

ESTIMATE Report the estimated time of casualty correction and factors that might affect the estimate.

MSGID Report identifying information for all Navy reporting structure (NRS) messages.

1PARTS Report parts required to repair an equipment casualty.

PARTSID Provide equipment identification information.

POSIT Report a unit's present location and effective date and time.

REF Identify the Initial CASREP date-time-group.

RMKS Provide amplifying information concerning all or a part of the message. Also, training commands report percentage of lost training and affected courses.

1STRIP Report equipment MILSTRIP information.

TECHPUB Identify the technical manual that pertains to a casualty item.

As you can see, a working knowledge of CASREP procedures is an important tool in the maintenance of your unit's material and operational readiness. A lot of care and effort should be made to ensure that CASREP messages are correctly submitted. You may be the one who has to draft and submit these reports, so it is essential that you become familiar with the CASREP system.

ORDNANCE MANAGEMENT AND ADMINISTRATION

LEARNING OBJECTIVES: Discuss the importance of ordnance management and administration procedures.

You know that there is more to ordnance accountability than maintaining the ammunition ledger. You may find yourself in charge of several different types of ordnance, both ashore and at sea. Because of budgetary restraints or material availability and security, the Navy has to maintain very strict accountability on all ordnance material.

CAIMS REPORTING

The Conventional Ammunition Integrated Management System (CAIMS) is the automated data processing management information system for conventional ammunition. CAIMS is composed of large files that contain the various elements of data required for the worldwide management of the Navy's expendable non-nuclear ordnance. The data in these files is processed into reports and other outputs that are required by various ammunition logistic managers on Navy staffs and commands throughout the world. CAIMS is the single point of reference within the U.S. Navy for the worldwide status and visibility of the Navy's expendable non-nuclear ordnance data regardless of inventory management or ownership responsibilities.

Conventional ammunition includes bullets, projectiles, rockets, grenades, torpedoes, bombs, guided missiles, propellants, primers, fuses, detonators, charges of conventional explosives, and chemical or other materials excluding nuclear material. All component parts thereof must also be considered conventional ammunition.

The ordnance material specifically included by CAIMS is listed by the ordnance management cognizance symbols shown in table 13-3.

Worldwide ammunition asset and expenditure recording is accomplished through CAIMS by the use of a computer located at SPCC, Mechanicsburg, Pennsylvania. The computer uses a series of remote terminals via a secure network to disseminate data rapidly. Expansion of this telecommunications network is constantly ongoing. CAIMS users have continuously updated worldwide ammunition asset information

Table 13-3.—Ordnance Management Cognizant Symbols and Materials

COGNIZANCE	MATERIAL	INVENTORY CONTROL RESPONSIBILITY	TECHNICAL RESPONSIBILITY
ØT	USMC-Owned Conventional Ammunition	USMC	USMC
2E	Conventional Air Ammunition	SPCC	NAVAIR
2T	Conventional Surface and Underwater Ammunition	SPCC	NAVSEA
4E	ALM (Air Launched Missile) Material	SPCC	NAVAIR
4T	Torpedoes, Torpedo Components, and ASROC (Antisubmarine Rockets)	SPCC	NAVSEA
6T	Underwater Mines and Components	NAVMINENGRFAC	NAVSEA
8E	Air Launched Guided Missiles and Components	NAVAIR	NAVAIR
8S	SUBROC (Submarine Rocket) Material	NAVSEA	NAVSEA
8T	Surface Launched Guided Missiles and Components	NAVSEA	NAVSEA
8U	Sonobuoys	SPCC	NAVAIR

available to them. If a ship anywhere in the world is ordered on a mission, CAIMS can be queried by remote terminal to determine the status of the ship's ammunition load out.

CAIMS data distribution is not limited to activities having a CAIMS terminal. Hard-cover listings, computer tapes, and microfiche reports are furnished to hundreds of activities having a need for this information.

Reporting into CAIMS is accomplished by two means: (1) TIR (Transaction Item Reporting) by AUTODIN (Automatic Digital Network) for CONUS activities according to SPCCINST P8010.12, *Policy, Procedures, Responsibilities for Supply Management of Conventional Ammunition*; and (2) message reporting for fleet activities according to CINCLANTFLTINST 8010.4/COMNAVLOGPACINST 8015.1. The validity of CAIMS data is directly related to the care and accuracy with which the various ships and activities report their data to SPCC.

SPCCINST P8010.12, as inferred by the title, provides policy, procedural, and responsibility guidelines for the supply management of conventional ordnance. While portions of this instruction apply primarily to CONUS shore activities, it also provides a considerable amount of information valuable to fleet users, such as ammunition definitions and codes, procedures for fleet retrograde of ammunition, requisitioning procedures, allowance list information, and procedures for manual stock recording for nonautomated activities.

Ammunition support received by the fleet is directly related to the Navy's ability to justify its ammunition budget requests. Since CAIMS data provides the basis for this justification, it should be noted that fleet support is related to the timeliness and accuracy of fleet transactions reported into the CAIMS. It should also be emphasized that the need for coordination and close cooperation between weapons and supply department personnel in ammunition management is a necessity if the CAIMS is to operate efficiently and correctly.

Activities report in the fleet format report on an "as occurring" basis via naval message. The data reported includes receipts, issues, combat expenditures, training expenditures, losses and gains by inventory, transfers out of the system, test and evaluation expenditures, and disposal. These activities also report

serial and lot data for maintenance of the Master Serial/Lot Item File (MSF). Document numbers are reported for receipts from major shore activities to maintain the "in transit" files.

Naval weapon stations, naval air stations, and other ordnance activities ashore report by TIR on a daily basis. These activities use the full range of TIR transactions.

Ammunition Transaction Reporting

The most important file maintenance function of the CAIMS is performed by the asset reporters. This function is accomplished through the submission of Ammunition Transaction Reports (ATRs). An ATR should be submitted for any action that affects the on-hand quantity of conventional ammunition (e.g., issues, receipts, expenditures, and inventory gains or losses). Any stock adjustment exceeding 1 percent of assets should be justified with an appropriate explanation.

To minimize the reporting burden of the fleet, you should submit ammunition transaction reports only to SPCC, which will serve as the central repository for this information. All requests for Navy ammunition data will be fulfilled by SPCC (based upon CNO approval). Information addressees on fleet ATRs will beheld to the minimum required for operational reasons, except that fleet commanders will be information addressees on all transaction reports,

Each reporting activity is responsible for the accuracy of CAIMS data for its particular unit. Inventory managers have a responsibility for ensuring the accuracy of CONUS assets listed in the CAIMS. Fleet logistic agents have a responsibility for ensuring the accuracy of listed fleet assets. All CAIMS users have an obligation to pursue apparent errors in the CAIMS database and ensure their correction whenever possible.

It is important to recognize that fleet support for ammunition is directly related to the timeliness and accuracy of fleet transaction reporting into the CAIMS. Accuracy in this reporting process cannot be overemphasized.

The CAIMS data base is updated daily. Insofar as possible, transaction reports must be submitted on an as-occurring basis within 24 hours of the transaction. A report should not be delayed several days to justify or correct discrepancies. Prompt reporting should be accomplished and followed by a corrected report, if required.

A simple checkbook procedure is used for fleet reporting in an effort to minimize errors. Each transaction begins by reporting the opening balance, which must agree with the last reported closing balance. If it does not, an error message is sent to the reporting activity. Reconciliations are accomplished by message on an exception basis. Reconciliation procedures provide that a reconciliation transaction report, to confirm on-hand balances, should be submitted by the ship or unit for items having no activity in a 6-month period. All asset balances in CAIMS should be reconciled at least every 6 months.

As described before, reports of ammunition transactions form the basis for the maintenance of the CAIMS data file, which, in turn, is the sole source of asset and expenditure information for ammunition logistics management. The high cost and limited availability of many munitions create a need at all levels of command for continuous, intensive, and careful management of ammunition. This can only be accomplished if the CAIMS data file is current and reliable. Therefore, it is extremely important for individual ATRs to be accurately prepared and forwarded in a timely manner. ATRs are normally forwarded by routine message—NOT by NAVGRAM or naval letter.

The ATR is prepared in a prescribed message format and transmitted electrically. The message report consists of 7 paragraphs, Paragraphs 1 through 5 identify the number of transactions being reported, the serial number of the report, the UIC of the reporting activity, the action class code (ACT) of the reporting activity, and the date of the transaction, respectively. Paragraph 6 provides specific information on the type of transaction, type of material, quantity of material involved in the transaction(s), on-hand assets of the material, and other data pertinent to the transaction. This section may contain one or more lines. Each line corresponds to a single transaction involving one type of material. All reportable transactions should be included in this paragraph whether or not the items are included in paragraph 7 of the report. Paragraph 7 is for remarks concerning weapon serial numbers and other explanatory data, as required. Figure 13-10 shows a typical ART, reporting the receipt of ammunition from a shore activity.

R 152332Z JUN 84
FROM: USS NIMITZ
TO: SPCC MECHANICSBURG PA
INFO: CINCLANTFLT NORFOLK VA
UNCLAS //N08010//
SUBJ: AMMO TRANS RPT CINCLANTFLT 8010-4
1. ITEMS TWO
2. SER EIGHT FOUR
3. UIC 03368/0
4. ACT CLASS DELTA
5. DATE 84166/5
6.

A	B	C	L	N
H542/1	220/4	200/2	420/6	V03368/3280/8634/4
J421/7	0/0	400/4	400/4	V03368/3280/8635/5

7. REMARKS: RCVD FM WPNSTA YORKTOWN.

Figure 13-10.—ATR showing receipt from a shore activity.

Again, detailed reporting procedures, report format, and requisitioning procedures are provided in CINCLANTFLTINST 8010.4 and COMNAV-LOGPACINST 8015.1. Dependent upon which fleet you are operating with, these instructions are the primary directives used in submitting ATRs.

Serial/Lot Item Tracking

Serial/Lot Item Tracking (SLIT) is required for air- and surface-launch missiles and boosters. SLIT provides for the complete tracking of certain items from birth to death by their unique serial or lot number.

Fleet units must SLIT-report on-loads from or off-loads to CONUS shore activities. They must also report intership transfers, expenditures, and condition code changes of all-up-rounds (AURs) and their components. SLIT reporting is required of both the receiving and issuing ships when an intership transfer is involved. The receiving/issuing ship must address each other for information on ATR message submissions. This requirement enables each ship to verify the transfers, correct any discrepancies, and submit the appropriate modified ATRs to SPCC.

All items that require SLIT reporting are contained in publication TW010-AA-ORD-010/NAVAIR 11-1-116A.

CALIBRATION AND REPAIR OF TEST/MEASURING EQUIPMENT

LEARNING OBJECTIVES: Discuss the calibration and repair of test/measuring equipment.

In the typical weapon system work center, there are several different devices (tools, test sets, and gauges) that are used to measure some component or function to a required standard. If these measuring devices are not maintained within the designed operating parameters, it only follows that your equipment will not function within its designed specifications. Three types of test, measuring, and diagnostic equipment (TMDE) are used with which you will be concerned:

1. **Electronic Test Equipment (ETE).** Electronic test equipment is broken down into two categories:

a. **General-Purpose Electronic Test Equipment (GPETE).** General-purpose electronic test equipment has the capability, without modification, to generate, modify, or measure a range of parameters of electronic functions required to test two or more equipments or systems of basically different designs. An oscilloscope would be classified as GPETE.

b. **Special-Purpose Electronic Test Equipment (SPETE).** Special-purpose electronic test

equipment is specifically designed to generate, modify, or measure a range of parameters of electronic functions of a specific or peculiar nature required to test a single prime equipment or system. An example of a SPETE is the Mk 363 Missile Electrical System Test Set (MESTS) used with the ASROC launcher.

2. **Electrical Test Equipment.** Electrical test equipment is any device that is specifically designed and primarily used to measure the basic parameters of current, voltage, resistance, and frequency of electrical power distribution equipment or systems. An example of electrical test equipment is a multimeter.

3. **Mechanical Test Instrument (MTI).** A mechanical test instrument is any device that is used to test, inspect, or diagnose a range of parameters in the measurement areas of pressure, temperature, flow, linear, optical, torque, weight, mass, and vibration. Torque wrenches, flow control metering valves, pressure gauges, and thermometers are just a few of the devices that are classified as MTIs.

TEST/MEASURING EQUIPMENT CALIBRATION

The Navy Metrology and Calibration (METCAL) Program was instituted to help provide calibration facilities so that sophisticated equipment, precise standards, and laboratory conditions would be available. Various echelons of calibration activities were established to meet these calibration requirements. These echelons are integrated so that each level activity has traceable standards tied to the highest standards available for calibration. We will describe the following calibration echelons:

National Bureau of Standards (NBS)

Metrology Engineering Center (MEC)

Navy Standards Laboratory—Type I

Navy Standards Laboratory—Type II

Navy Calibration Laboratory (NCL)

Fleet Calibration Laboratory (FCL)

Field Calibration Activity (FCA)

National Bureau of Standards (NBS)

The National Bureau of Standards (NBS) is the chartered agency of the federal government having custody of the nation's basic physical standards (national standards). It provides the common reference for all measurements made within the scope of the Navy calibration program and certifies the Navy standards submitted by the Navy Type I Standards Laboratories according to an approved schedule.

Metrology Engineering Center (MEC)

The Metrology Engineering Center (MEC) is an engineering group responsible for the technical coordination of the Navy calibration program. It is under the management control and technical guidance of the Naval Sea Systems Command (NAVSEASYSCOM). The Metrology Engineering Center is located at the Naval Industrial Reserve Ordnance Plant, Pomona, California, and is under the military command of the Naval Plant Representative Office, Pomona, California.

Navy Standards Laboratory—Type I

The Type I laboratories maintain the highest standards within the Navy calibration program. They maintain and disseminate measurements of the highest accuracy within the program. They obtain calibration services from NBS and provide calibration of laboratory standards and associated measuring equipment received from Type II standards laboratories and calibration laboratories.

Navy Standards Laboratory—Type II

The Type II laboratories furnish the second highest calibration services to assigned geographic areas within the naval establishment. They obtain standard calibration services from the cognizant Type I Navy Standards Laboratory and calibrate laboratory standards and associated measurement equipment received from lower echelon laboratories.

Navy Calibration Laboratory (NCL)

NCLs are located in shipyards, ship repair facilities, and at various NAVELEX field activities. An NCL is usually made up of a Reference Standards Laboratory (RSL) and one or more Local Standards Laboratories (LSLs). The RSL is a Type II laboratory. The LSL normally receives calibration from the RSL.

Field Calibration Laboratory (FCL)

The FCLs are established aboard tenders and repair ships and at selected shore activities. They provide calibration for fleet-held and selected shore-based activities' test equipment. The equipment submitted for calibration by ships will be funded by the shore activity or its sponsor.

Field Calibration Activity (FCA)

The Field Calibration Activity (FCA) segment of the Navy calibration program was established to extend

calibration-support capability to selected ships and shore activities to ensure the accuracy and reliability y of electronic test and measuring equipment. It also permits users to calibrate certain items of their own low-accuracy, high-volume electronic test equipment.

A complete FCA consists of suitable working spaces, field calibration packages, trained personnel, and the necessary support documentation, such as the *Metrology Requirements List (METRL)* and instrument calibration procedures (ICPs). The ICPs are provided as maintenance requirement cards and as NAVAIR 17-20 VQ series procedures.

METROLOGY AUTOMATED SYSTEM FOR UNIFORM RECALL AND REPORTING (MEASURE)

The preceding section explained the calibration echelons established for calibration of test equipment. Now let's take a look at an important calibration program called the Metrology Automated System for Uniform Recall and Reporting (MEASURE) Program.

The MEASURE Program is an automated data processing system designed to provide a standardized system for the recall and scheduling of test equipment into calibration facilities. It was developed to support the Department of the Navy's Metrology and Calibration (METCAL) Program in an effort to ensure that all equipment requiring calibration and servicing is submitted to a calibration activity on a timely basis and thus is maintained to a maximum level of efficiency and dependability. In addition, the system provides documentation of actions performed by the calibration activity.

The initial cycle of MEASURE begins with the completion of the inventory forms for equipment held by an activity (fig. 13-11). These forms are forwarded to the cognizant MEASURE data processing facility (DPF) to establish the data base. The activity holding the test equipment is then provided a printed inventory and a set of preprinted Metrology Equipment Recall and Report (METER) cards (fig. 13-12). The MEASURE cycle is completed when the cognizant METCAL representative provides recall schedules to the activity holding the test equipment and to the concerned calibration activities. As equipment is gained or lost, more inventory forms and METER cards are processed or deleted, the database is kept current, and the system continues to cycle,

Through the submission of METER cards, each activity must promptly update its recorded inventory; that is, the inventory data maintained in the computer data base by the MEASURE Operational Control Center (MOCC) and the Control Data Base Facility (CDBF), Concord, California. In this manner, calibration requirements can be projected in enough time to permit their incorporation into the next recall schedule. If the inventory is not updated promptly, new activity items will have to be rescheduled or be submitted to a calibration activity for unscheduled calibration upon prior approval of the cognizant METCAL authority.

The MEASURE Program provides management personnel with a wide variety of valuable information on fleet readiness, budget and funding information, and calibration problems.

MEASURE products and formats have been designed to meet the information requirements of several levels of management. Many MEASURE formats are forwarded automatically by the MOCC or CDBF to the activities on a regular basis. Such distribution is based upon the type and level of those activities and upon established requirements. Others, however, are available only upon the receipt of an approved request from the cognizant METCAL authority. Accordingly, activities needing a particular format that is not being received automatically should forward the requirement to the cognizant METCAL authority for approval. Any such request should include a justification of the need for the format and a statement indicating the frequency at which the format is required.

Just as the 3-M Systems generate automated data and reports, so also does the MEASURE Program. The. following MEASURE products are distributed automatically to activities by the MOCC and/or CDBF at the intervals shown below:

Format 215	Unmatched Listing	As required
Format 310	Test Equipment Inventory	Monthly
Format 350	Test Equipment Inventory in Subcustodian Order	Monthly
Format 802	Recall Schedule and "On-Site" Equipment	Monthly
Format 802	Recall Schedule and "Equipment due in Laboratory"	Monthly
	Replenishment preprinted METER cards	As required
	Blank METER cards	Initial issue

CUSTOMER MAILING ADDRESS	
TO	CODE
BUILDING NUMBER	
ACTIVITY	LAB CODE
CITY	
STATE	
ZIP	ATTENTION

MEASURE TMDE INVENTORY

CUSTOMER ACTIVITY CODE

PLEASE CHECK (√) APPROPRIATE BLOCK

- ☐ THIS FORM REFLECTS ONLY ITEMS RECALLED ON A REGULAR BASIS
- ☐ THIS FORM REFLECTS ONLY ON-SITE ITEMS
- ☐ THIS FORM REFLECTS ONLY ITEMS IN NCR STATUS
- ☐ THIS FORM REFLECTS ONLY INACTIVE ITEMSK

CAL LAB	SUB CUSTODIAN	MFR	MODEL PART NUMBER	SERIAL NUMBER	NOMENCLATURE	DATE LAST SERV	NEXT DUE DATE	SERV CYC	MAJOR SYSTEM WHICH EQUIPMENT IS PART OF			

GMNP0510

Figure 13-11.—MEASURE TMDE Inventory Report Form.

MODEL/PART NO. (1) 260-6XLP | PART OF: (2) | MFR. CODE (3) 55026 | SERIAL NUMBER (4) 0E14 | CUSTOMER ACTY. (5) CVN68 | SUB CUSTODIAN (6) 0E06 | SCHEDULED LAB CODE (7) MNQ | UIC (8) | ITEM CONTROL NO. (9) Q 97960

MODEL/PART NO. (CHANGE) (1A) | PART OF: (CHANGE) (2A) | MFR. CODE (CHANGE) (3A) | SERIAL NUMBER (CHANGE) (4A) | CUSTOMER ACTY. (CHANGE) (5A) | SUB CUSTODIAN (CHANGE) (6A) | LAB CODE (CHANGE) (7A) | EQUIPMENT CONTROL NO. (10) 94

NOMENCLATURE (11) MULTIMETER | AIR CATEGORY CODE (12) | NATIONAL STOCK NUMBER | (13) PLANT ACCOUNT NO. (14) | QTY. (15) | SERVICING ON SITE (16) NO | DATE LAST SVCD. (17) 04 18 95 (MO. DAY YR.) | CALIBRATION DUE (18) 01 18 95 (MO. DAY YR.)

INVENTORY / RECALL INSTRUCTIONS (19) — REMARKS (20)

		MO.	DAY	YR.
1				
2	RESCHEDULE DATE TO:			
3	ADD TO INVENTORY			
4	TRANSFER CUSTODY TO: ACTIVITY IN BLOCK 5A			
5	DELETE FROM INVENTORY			
6				
7	RECORD MAN HOURS ONLY			

FOR LABORATORY USE ONLY

SERVICING LAB (21) CODE | SHOP NO. (22) 67A | DATE RECEIVED (23) MO. DAY YR.
LAB CAL TYPE 4 | VALUE IF FIXED STD (23) | DATE INDUCTED (23A) MO. DAY YR.
STANDARD HOURS (27) | METAL CYCLE (28) 36 | DATE COMPLETED (26) MO. DAY YR.
NEXT DUE DATE (28) MO. DAY YR.
CLASS STD (30) | APPROVED PROCEDURE (37)
PHASE/LEVEL (36) A1 | PROCEDURE USED (38)
MAN HOUR CALIB. (40) | CALIB. JOB ORDER NO. (41)
MAN HOUR REPAIR (42) | REPAIR JOB ORDER NO. (43)
MODIF. HOURS (44) | SEB NUMBER (45)
GSE REWORK NO. (46) | SEC NUMBER (47)
1ST TECHNICIAN (48) | 2ND TECHNICIAN (49) | SUPERVISOR (50)

ENTER OUT OF TOLERANCE VALUES ONLY

PROCEDURE STEP NUMBER (30)	FUNCTION TESTED (31)	NOMINAL VALUE (32)	FIRST MEAS. VALUE (33)	LOWER TOLERANCE (34)	UPPER TOLERANCE (35)

PARTS REPLACED

CIRCUIT SYMBOL (51)	PART NUMBER (52)	MFR. CODE (53)	NATIONAL STOCK NUMBER (54)	COST OF PART (55)	QTY. (56)	TO AWAITING PARTS (57) MO. DAY YR.	OFF AWAITING PARTS (58) MO. DAY YR.

SERVICING LAB LABEL ATTACHED (59)		TYPE OF EQUIPMENT (60)	
1	CALIBRATED	1	ELECTRONIC
2	SPECIAL CALIBRATION	2	COAXIAL/MICROWAVE
3	REJECTED	3	OPTICAL/DIMENSIONAL
4	CALIBRATION NOT REQ	4	PHYSICAL/MECHANICAL
5	INACTIVE	5	ELECTRICAL
6	REPAIR (NO LABEL)	6	SPECIAL SUPPORT

CONDITION RECEIVED (61)		RELAY STATUS (62)	
1	IN TOLERANCE	1	PARTS
2	OUT OF TOLERANCE	2	TECH DATA
3	OPER FAIL/IN OP	3	STANDARDS
4	DAMAGED	4	PERSONNEL

EQUIPMENT STATUS (63)			ACCESSORIES (64)	
1	COND. ECHOES BOW NEAR	6		BACKLOG
2	SETS TO CHECK MEAS RATES	7		OTHER

(65) CAL LAB STANDARD

METROLOGY EQUIPMENT RECALL AND REPORT
OPNAV FORM 4790/58 (07/74) METER CARD
MODEL/PART NO. (A) 260-6XLP | MFR. CODE (B) 55026 | SERIAL NUMBER 0E14 | (C) NOMENCLATURE MULTIMETER | (D) ITEM CONTROL NO. Q 97960 | (E)

REQUEST REPLY FROM: ☐ MEC POMONA ☐ NASCR PAC ☐ NASCR LANT (54)

DPF COPY
A 051280 A

CVN68 N00070

THIS PAPER HAS NO CONTENT OF POLYCHLOROBIPHEHNYL

TO: MNQ
COMMANDING OFFICER
USS NIMITZ (CVN68)
FPO NEW YORK 09542

ATTN: PME LAB

CALIB. JOB ORDER NO. (9) | REPAIR JOB ORDER NO. (8) | DATE DUE IN LAB (1) 01 18 81 (MO. DAY YR.) | DATE REC'D BY LAB (J) | ACCEPTED BY (K)
EQUIPT. LOCATION (L) | DATE INDUCTED (M) | DATE DUE OUT OF LAB (N) | DATE RETD TO CUST. (O) | ACCEPTED BY (P)
ACCESSORIES RECEIVED (Q): POWER CORD, LEADS, MANUALS, COVERS | (R) LAB SHOP NO. (S) 67A
REMARKS AND SPECIAL REQUESTS (U)

FROM: CVN68
COMMANDING OFFICER
USS NIMITZ (CVN-68)
FPO NY 09542

ATTN: AIMD/IM3-670

北の紙には
ポリクロロビフェニル
(POLYCHLOROBIPHENYL)
が含まれ
ません

XXXXX

MODEL/PART NO. (V) 260-6XLP | MFR. CODE (W) 55026 | SERIAL NUMBER 0E14 | (X) NOMENCLATURE MULTIMETER (ID. TAG) | (Y) ITEM CONTROL NO. Q 97960 | (Z)
OPNAV FORM 4700/60A (07/74) EQUIPMENT IDENTIFICATION AND RECEIPT TAG

33NP0001

Figure 13-12.—OPNAV Form 4790/58, MEASURE METER Card.

For detailed information on the "MEASURE program (including the above listed formats), refer to the *Metrology Automated System for Uniform Recall and Reporting (MEASURE) User's Manual,* OPNAV 43P6A, commonly called the MEASURE User's Manual.

Equipment Calibration Status

The Navy calibration program has a series of distinctive labels and tags for indicating the calibration or serviceability status of all Navy test and measuring equipment. All calibration personnel and equipment users should be familiar with each label and tag and its meaning. Labels of different nomenclature, color combinations, and shapes have been designed to help users identify the calibration status. These labels and tags should be used by all participants in the Navy METCAL Program and should be affixed to all Navy standards and test/measuring equipment. NAVAIR 17-35MTL-1/NAVELEX 0969-LP-133-2101/ NAVSEA OD 45845, *Metrology Requirements List (METRL),* lists Navy calibration procedures and intervals for all laboratory standards and test/measuring equipment. Only equipment actually used for quantitative measurements requires calibration. The *Department of the Navy Metrology and Calibration (METCAL) Program* (NAVELEX Instruction 4355.2) permits the custodians of test and measuring equipment to obtain and affix **CALIBRATION NOT REQUIRED** and **INACTIVE** labels to test/measuring equipment. The METRL also identifies test and measuring equipments that are known to require calibration. Assistance in identifying other test/measuring equipment in this category is available from the respective METCAL group, from the systems commands' designated representatives, or from the Metrology Engineering Center (MEC). Examples of all labels and tags used m the METCAL Program are described and illustrated in the following paragraphs.

CALIBRATED.— The CALIBRATED label (fig. 13-13, black lettering with a white background) comes in two different sizes and is the most commonly used

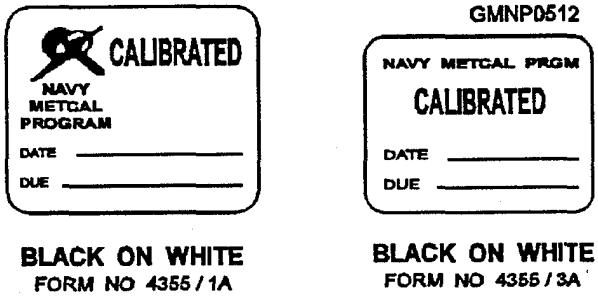

Figure 13-13.—CALIBRATED labels.

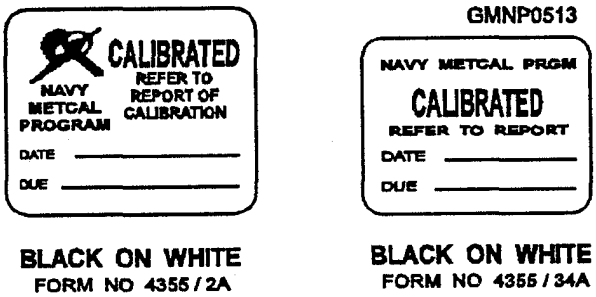

Figure 13-14.—CALIBRATED-REFER TO REPORT labels.

label in the Navy METCAL Program. It indicates that the instrument to which it is affixed is within its applicable tolerance on all parameters. If there are any qualifying conditions for use of the instrument, one of the other labels should be used.

CALIBRATED-REFER TO REPORT.— The CALIBRATED-REFER TO REPORT label (fig. 13-14, red lettering with a white background) also comes in two sizes. It is used when you must know actual measurement values and associated uncertainties to use the instrument.

SPECIAL CALIBRATION.— There are two SPECIAL CALIBRATION labels (fig. 13-15, black lettering with a yellow background), differing in size and content. There is also a SPECIAL CALIBRATION tag, which is used with the smaller of the two labels. The SPECIAL CALIBRATION label is to be used whenever there is some unusual or special condition in the calibration that should be drawn to the attention of the user and/or calibrating activity. Examples of special conditions are deviations from usual calibration tolerances, multiple calibration intervals, or a requirement for in-place calibration. The special condition that resulted in the special calibration should

Figure 13-15.—SPECIAL CALIBRATION labels and tag.

be described directly on the large label where sufficient space is available to mount the label on the instrument. When there is only enough spats for the small label on the instrument, this condition should be described on the tag. The following paragraphs briefly describe the situations that may require the use of the SPECIAL CALIBRATION label.

Deviation from Specifications.— In cases where the user does not require full-instrument capability, the calibration could be performed to reduce tolerances or cover less than all ranges and parameters. This approach is often used when the instrument does not meet Ml-calibration tolerances on certain ranges or parameters but can still meet user requirements. On the other hand, the special calibration may be for higher accuracy than usual on a short-term basis upon the specific request of the user. In many cases, users should be requesting special calibration because of deviation from specifications. For example, the user sends an instrument in for full calibration but will **never** use it over its full range. The user should have requested special calibration of the instrument to cover only the ranges needed. If this is accomplished Navywide, thousands of calibration hours and dollars could be saved.

Multiple Calibration Intervals.— Some instruments have components that require calibration less frequently than the rest of the instrument. For example, the attenuator in a signal generator may require calibration every 12 months, whereas the rest of the instrument parameters should be calibrated every 4 months. Since the attenuator calibration is time-consuming and may require unavailable standards, use of the multiple-interval approach can save many man-hours and can permit the more frequent calibration to be performed at a lower level laboratory. When a specific instrument has been designated for multiple calibration intervals, such information is provided in the applicable calibration procedure. The SPECIAL CALIBRATION label or tag should be annotated as Multiple Interval, and the type of calibration performed should be indicated (i.e., partial 1 of 2, 2 of 2, or complete calibration). The calibration due date reflects the due date of the next partial or complete calibration, as the case may be.

Calibrated in Place.— Some instruments should be calibrated in place. Annotation on the SPECIAL CALIBRATION label or tag and MEASURE format should alert both the user and the calibration activity that the instrument should not be removed but should be calibrated where it is actually installed.

GMNP0515

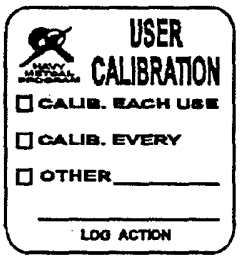

BLACK ON WHITE
FORM NO 4355/24

Figure 13-16.—USER CALIBRATION label.

USER CALIBRATION.— The user should calibrate some test/measuring equipments instead of referring the instruments to a calibration facility. For example, some instruments, such as hardness testers and densitometers, are provided with their own standards and should be calibrated each time they are used or at least on a frequent basis. Instruments, such as oscillographic recorders, may require calibration before, during, and after each use. Some automatic instruments have self-calibration tests that should be performed each time they are used. Still other instruments may require calibration as part of check-out procedures performed daily or weekly. These calibrations should be recorded in maintenance logs. Whenever recognized, the requirement for calibration by the user and the calibration interval are indicated in the METRL. The USER CALIBRATION label (fig. 13-16, black lettering with a white background) is affixed when the calibration is performed by the user. This label is not replaced at each calibration. When the label is first affixed to the instrument, it is annotated as to the appropriate calibration intervals. Records of calibrations performed (when calibration is performed other than each time the instrument is used) should be by normal maintenance practices, such as maintenance logs and maintenance action forms.

INACTIVE.— If an individual instrument due for recalibration will not be used for sometime in the future, the user may indefinitely postpone the recalibration by affixing an INACTIVE label (fig. 13-17, green lettering

GMNP0516

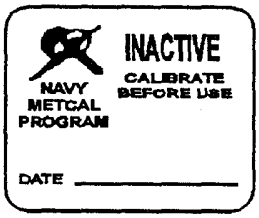

GREEN ON WHITE
FORM NO 4355/11A

Figure 13-17.—INACTIVE label.

with a white background) to the instrument. The INACTIVE label remains on the instrument until it is recalibrated. The instrument should not be used while it is bearing an INACTIVE label. The inactivation of test equipment occurs most commonly when a ship is in an overhaul status and the test equipment has been removed from the ship and stored in an environmentally safe location.

CALIBRATION NOT REQUIRED.— Standards and test/measuring instruments not requiring calibration are shown as NCR in the *Metrology Requirements List (METRL).* The CALIBRATION NOT REQUIRED label (fig. 13-18, orange letters with a white background) is affixed on the instrument and should remain there indefinitely unless its calibration requirements are changed. If an instrument is not listed in the METRL, you should use the following criteria (as listed in the METRL) to decide if the instrument should be placed in the CALIBRATION NOT REQUIRED CATEGORY:

- The instrument does not make quantitative measurements nor does it provide quantified outputs.
- The instrument is "fail-safe" in that any operation beyond the specified tolerances will be apparent to the user.
- All measurement circuits are monitored during use by calibrated instruments or are dependent on external known or calibrated sources of performance within required limits.

When you determine that an instrument falls into the CALIBRATION NOT REQUIRED category, you should annotate the label as to the authority for the decision, such as METRL, the applicable technical manual, and letters or messages from higher authority.

REJECTED.— If an instrument fails to meet the acceptance criteria during calibration and cannot be adequately repaired, a REJECTED label (fig. 13-19, black letters with a red background) is placed on the instrument and all other servicing labels are removed. In addition to the REJECTED label, a REJECTED tag, giving the reason for rejection, is attached to the instrument. This rejection is also entered onto **the** MEASURE format of the instrument. The REJECTED label and tag remain on the instrument until it is repaired and recalibrated. The instrument should not be used while bearing a REJECTED label.

GMNP0517

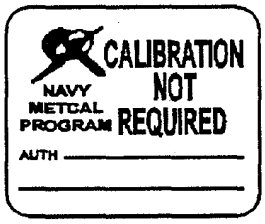

ORANGE ON WHITE
FORM NO 4355 / 10A

Figure 13-18.—CALIBRATION NOT REQUIRED label.

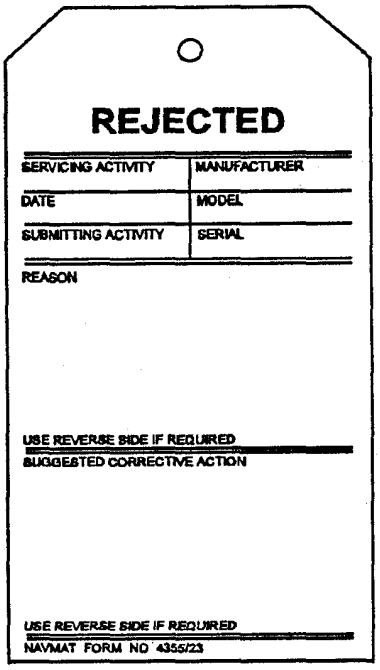

BLACK ON RED

BLACK ON RED
FORM NO. 4355/12A

GMNP0518

Figure 13-19.—REJECTED label and tag.

CALIBRATION VOID IF SEAL BROKEN.— The CALIBRATION VOID IF SEAL BROKEN label (fig. 13-20, black letters with a white background) is placed over readily accessible (usually exterior) adjustments to prevent tampering by the user when such tampering could affect the calibration. The label should not be used to cover adjustments or controls that are part of the normal use or operation of the instrument. This label may also be used to prevent removal and/or interchange of plug-ins, modules, and subassemblies when such removal or interchange will affect the calibration.

GMNP0519

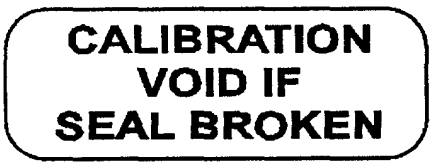

BLACK ON WHITE
FORM NO. 4355/14

Figure 13-20.—CALIBRATION VOID IF SEAL BROKEN label.

Repair of Test/Measuring Equipment

Test equipment corrective maintenance is the correction of test equipment troubles, including the repair of an item after a complete breakdown, finding of faults during preventive maintenance, or the tuning and adjustment of an item to restore it to operating condition.

Many fleet activities are reluctant to repair electronic test equipment. However, the Navy expects fleet personnel to perform a certain amount of maintenance and repair of their own test equipment whenever possible. The parts needed to make repairs may already be aboard the ship. It will often be your responsibility to decide when a piece of test equipment should be repaired and who should repair it. You will need to consider the following factors.

Much of the test equipment now being used by naval activities is expensive and is built and calibrated to a high degree of precision. Repair often requires special laboratory facilities and skill. Although each activity should accomplish all repairs within its capabilities, the lack of qualified personnel or adequate facilities limits the kinds of repairs each activity should attempt. Repairs attempted by unqualified maintenance personnel or personnel working in inadequate facilities could result in extensive damage to equipment. Therefore, you should evaluate each piece of test equipment to determine if your personnel should make the repairs, especially when maintenance of test equipment requires repair of critical calibration or frequency-determining circuits. When repairs are accomplished locally, technical manual procedures should be followed carefully; **the repair and assembly of parts should be meticulous.** When your personnel cannot make the repairs or when the necessary post verification is beyond the capabilities and facilities of repair personnel, the equipment should be forwarded to the nearest maintenance activity that has the proper facilities.

Calibration laboratories are authorized to make only incidental repairs, defined as those found necessary during calibration to bring the item within specified tolerances. Before submitting an inoperative item of test/measuring equipment for repair to the maintenance activity, you should note all faults, symptoms, and any other malfunction characteristics on an OPNAV Form 4790/2K and submit the 2K through the proper channels for repair-action screening.

PHYSICAL SECURITY OF CLASSIFIED MATERIAL

LEARNING OBJECTIVE: Discuss the aspects of physical security of GM spaces and classified material.

It is the responsibility of all personnel in the Navy to safeguard military information. Since you may often require the use of classified matter in your work, an understanding of the proper safeguards and control of such matter is essential.

The Department of the Navy Information Security Program Regulations, OPNAVINST 5510.1 (latest revision), is the controlling guide in safeguarding classified information. There is no adequate substitute for continuous day-to-day practice in the proper methods of handling classified material.

Classified information or material may be used only where the proper control facilities are available or under conditions adequate to prevent unauthorized persons from gaining access to it. The exact nature of security requirements depends on a thorough security evaluation of local conditions and circumstances. Security requirements must permit the accomplishment of essential functions while affording classified information appropriate security. The requirements that follow represent the minimum acceptable standards.

RESPONSIBILITIES OF CUSTODIANS

Custodians of classified material should be responsible for safeguarding the material at all times, and particularly, for locking classified material in appropriate security containers whenever it is not in use or under the direct supervision of authorized persons. Custodians should follow procedures which ensure that unauthorized persons do not gain access to classified information or material by sight or sound or other means. Classified information should not be discussed with, or in the presence of, unauthorized persons.

Classified information or material should not be removed from an officially designated office or working area for the purpose of working on such material during off-duty hours. Holding classified material for purposes involving personal convenience is not authorized unless specifically approved by the commanding officer or his or her designee. Prior to approval being granted, it must be determined that

- a compelling necessity exists,
- the required physical security can be provided, and
- a complete list of the removed material will be left with the command.

CARE OF WORKING SPACES

Buildings and spaces containing classified information must be afforded the security measures necessary to prevent unauthorized personnel from gaining access to it. 'This includes the security measures necessary to prevent persons outside the building or spaces from viewing or hearing classified information.

CARE DURING WORKING HOURS

During working hours, you should take precautions to prevent access to classified information by unauthorized persons. Among the necessary precautions are the following:

1. Classified documents, when removed from storage for working purposes, will be kept under constant surveillance and facedown or covered when not in use. Classified material cover sheets, such as OPNAV Form 5216/96, maybe used for this purpose.

2. Classified information will be discussed only when unauthorized persons cannot overhear the discussion.

3. Preliminary drafts, carbon sheets, plates, stencils, stenographic notes, work sheets., and all similar material containing classified information either should be destroyed by an approved method for destroying classified material immediate] y after they have served their purposes or will be given the same classification and safeguarded in the same manner as the classified material they produced.

4. Typewriter ribbons used in typing classified material should be protected in the same manner as required for the highest level of classification for which they have been used. Also, they must be destroyed as classified waste. The following are exceptions:

a. After the upper and lower sections have been cycled through the machine five times in the course of regular typing, all fabric ribbons may be treated as unclassified regardless of their classified use thereafter.

b. Any typewriter ribbon that remains substantially stationary in the typewriter until it has received at least five consecutive impressions may be treated as unclassified.

SECURING CLASSIFIED MATERIAL

Your command should require a security check at the end of each working day to ensure that all classified material is properly secured. The security check should determine the following:

1. All classified material is stored in the manner prescribed.

2. Burn bags are properly stored or destroyed.

3. The contents of wastebaskets that contain classified material have been properly stored or destroyed.

4. Classified shorthand notes, carbon paper, carbon and plastic typewriter ribbons, rough drafts, and similar papers have been properly stored or destroyed.

5. Security containers have been locked by the responsible custodians. The dial of the combination locks should be rotated at least four complete times in the same direction when securing safes, files, or cabinets.

The security check should be made a matter of record with the record retained at least until the next security check is conducted. Optional Form 62 may be used for this purpose.

STORAGE OF CLASSIFIED MATERIAL

Commanding officers are responsible for safeguarding all classified material within their commands and for ensuring that classified material not in actual use by appropriately cleared personnel, or under their direct personal observation, is stored in the manner prescribed for that material.

As a leading Gunner's Mate, you should ensure that any weakness or deficiency found in containers being used for the protection of classified material is reported to the proper authority.

Because they increase the risk of theft, valuables should not be stored with classified material.

Containers should not have external markings that indicate the level of classified information stored within. For identification purposes, however, the exterior of each container should bear an assigned number or symbol.

COMBINATIONS AND KEYS

Combinations to security containers should be changed only by individuals cleared for the highest level of classified material in the container. Combinations should be changed under any of the following circumstances:

1. When the container is first placed in use after procurement.

2. Whenever an individual knowing the combination no longer requires access.

3. When the combination has been compromised or the security container has been discovered unlocked and unattended.

4. At least annually, unless a more frequent change is dictated by the type of material stored therein.

5. When the container is taken out of service. Built-in combination locks should be reset to the standard combination 50-25-50. Combination padlocks will be reset to the standard combination 10-20-30.

In selecting combination numbers, multiples of 5, simple ascending or descending arithmetical series, personal data, such as birth dates, and serial numbers should be avoided. The same combination should not be used for more than one container in any one component of the command.

The combination of a vault or container used for the storage of classified material should be assigned a security classification equal to the highest category of the classified material authorized to be stored in it.

Knowledge of, or access to, the combination of a vault or container used for the storage of classified material should be given only to those appropriately cleared persons who are authorized access to the classified information stored therein and have an operational use for it.

Records of combinations should be sealed in an envelope (OPNAV Form 55 11/2 maybe used) and kept on file by the security manager, duty officer, communications officer, or other person designated by the command.

When key-operated high-security padlocks are used, the keys should be controlled as classified material of a classification equal to the classification of the material being protected and should be safeguarded as follows:

1. A key and lock custodian should be appointed to ensure proper custody and handling of keys and locks used for protecting classified material.

2. A key and lock control register should be maintained to identify keys for each lock and their current location and custodian.

3. Keys and locks should be audited each month.

4. Keys should be inventoried with each change of custodian.

5. Keys should not be removed from the premises.

6. Keys and spare locks should be protected in a security container.

7. Locks should be changed or rotated at least annually, and should be replaced upon loss or compromise of their keys.

8. Master key is prohibited.

A record should be maintained for each vault, secure room, or container used for storing classified material. This record should show the location, and the names, home address, and home telephone numbers of persons having knowledge of the combination to the storage facility. GSA Optional Form 63 or OPNAV Form 5511/30 may be attached to the container to identify the custodian. When Optional Form 63 is used, a privacy act statement should be provided to those listed and their consent obtained before any prominent display is allowed.

Electrically actuated locks (e.g., cipher and magnetic strip card locks) do not afford the degree of protection required for classified information and should not be used as the locking device on security containers.

REPRODUCTION OF CLASSIFIED INFORMATION

Classified information is normally prepared, printed, and reproduced by Department of the Navy or Department of Defense facilities. When this is not possible, the preparation, the printing, and the reproduction of classified information is authorized by the following:

1. For Top Secret material:

a. Only as specifically approved by the Director, Navy Publications and Printing Service.

2. For Secret and Confidential material:

a. Government Printing Office

b. In commercial facilities having an active facility clearance at least as high as the classified information to be processed and obtained according to the requirements of the Department of Defense industrial security regulation and when specifically approved by the Director, Navy Publications and Printing Service.

Printing, Duplication, and Reproduction of Classified Material

The Director, Navy Publications and Printing Service, is responsible to the Commander, Naval Supply Systems Command, for the technical guidance and distribution of all Navy classified publications.

From a security viewpoint, the printing, the duplication, or the reproduction of classified material poses many problems: (1) it contributes to the increasing volume of classified material; (2) it permits quick and easy production of uncontrolled material containing classified information; (3) the equipment or processes require care or special procedures to prevent or eliminate latent impressions or offset versions of the classified information; and (4) a quantity of excess and waste material is produced, which can contribute to compromise of the classified information. Therefore, local commands must require close supervision and careful control of all reproduction facilities under their jurisdiction. Of particular importance is the need to control and supervise the use of office copying machines for the printing, the duplication, or the reproduction of classified material and to assure the proper recording and safeguarding of the classified material reproduced by such means. In no event, however, should classified material be reproduced without the approval of competent authority.

Destruction of Classified Material

For instructions regarding the destruction of classified material, refer to OPNAVINST 5510.1 (latest revision).

TRAINING

LEARNING OBJECTIVES: Discuss the different types of training available to GMs and the importance of each.

Because of the mission of the Navy, warships and aircraft are equipped with highly complicated devices used for the detection, engagement, and destruction of the enemy. To achieve the designed degree of effectiveness, highly skilled personnel are needed to maintain and operate this equipment. Naturally, these skills are obtained through the various training programs provided by the Navy. The basis of all training is the development of these skills within the individual. Group training can only be accomplished if all individuals involved have been trained to the basic level of knowledge of the required skills. For example, before a damage control party can perform efficiently, each member should be qualified at his or her assigned position within that party. These qualified individuals can now be trained to work together as a team, performing a procedure based on several independent functions.

As a supervisor, you are going to be very heavily involved in the process of training personnel. Your involvement may include any number of procedures—from the planning of these training programs to the actual training of personnel. Generally, training is considered to be one of two types—formal or informal.

FORMAL TRAINING

The best definition of formal training is training that is conducted off the ship or out of your unit. A Sailor's first exposure to formal training is recruit training. Once he or she leaves boot camp, training really begins in earnest. The first duty assignment may be to a class A school to get initial rate training. This is followed by an assignment to a new command, which may or may not involve assignment to other rate or duty-related training. For example, a person could possibly attend a class C school directly after graduating from an A school. He or she could be assigned to a precommissioning school or a damage control school. Other formal training is provided by such activities as fleet training groups (FTGs), mobile technical units (MOTUs), or nuclear weapons training groups (NWTGs).

Naval commands frequently send their personnel to TAD to formal schools to upgrade their skills in all areas of performance including military, in-rate, and administration. The *Catalog of Navy Training Courses (CANTRAC),* NAVEDTRA 10500, lists all formal courses of instruction offered to naval personnel. This catalog is published in microfiche form and contains the following information about each of the courses listed:

Course location

Course length

Class school (A, C, or P)

How frequently the course convenes

Purpose of the course

Scope of the course

Prerequisites for personnel attending the course

Quota control information

Reporting destination

The CANTRAC is normally maintained by the educational services officer (ESO).

INFORMAL TRAINING

For all practical purposes, informal training can also be called shipboard training because it is conducted within the working environment. Many different types of informal training can be conducted, but to describe them all here would be impractical. Instead, some of the more frequently used types are identified in the following paragraphs to make you aware of how extensive informal training really is.

Navy Correspondence Courses

In most cases, Navy correspondence courses are a prerequisite to taking an advancement examination. You are working on one right now. They can be completed at your leisure and at a pace that is comfortable for you. Remember that correspondence courses are not limited to training in a particular rate/rating. Several hundred courses are available, covering a large number of technical, administrative, and scholastic skills. A complete list of correspondence courses available is contained in the *Catalog of Nonresident Training Courses,* NAVEDTRA 12061.

Assist Visits

Traditionally, an assist visit is viewed as a working inspection; but this is far from true. The real purpose of an assist team is to observe your operations or performance and provide instruction to correct any problem areas observed. These assist visits are conducted by activities, such as MOTU, NAVSEA, FTG, or even by factory representatives investigating equipment problems. As a rule, an assist visit is not a graded evolution; it is provided to help you in preparing for an operational evolution.

On-the-Job Training (OJT)

On-the-job training is the most common form of informal training available. It is also the easiest, because, in most cases, it is provided while performing in the working environment. Although the basics of most tasks can be provided in the classroom, nothing can replace the hands-on experience gained in learning about any particular task, watch station, or a piece of equipment. OJT is usually provided during drills, watches, and actual operational evolutions. Ships' crews are largely made up of experienced technicians. As one of those senior technicians, it is your responsibility to pass on your skills and expertise to those you work with to maintain and improve the maximum efficiency of your unit. One of the better aspects of OJT is that while a person is being trained on the job, he or she is also undergoing other forms of informal training at the same time. For example, if a person is standing a watch under your instruction, he or she is also learning and demonstrating the required PQS skills for that watch station. He or she may also be receiving instructions or information that may be provided through general military training.

General Navy Training (GNT)

General Navy training is conducted at every unit for virtually everyone in the Navy. GNT is used to make personnel aware of all the knowledges and skills necessary to function from day to day within the Navy environment. In other words, information is passed that should become general knowledge to all naval personnel. A wide variety of subjects are covered through GNT and to list them all would be nearly impossible. You should know, however, that each command is responsible for maintaining a GNT program. Guidelines governing the organization and implementation of the GNT program are provided in the

unit's *Standard Organization and Regulations Manual* (SORM).

Personnel Qualification Standards (PQS)

The PQS Program is a qualification system for officer and enlisted personnel to perform certain duties. A PQS is a compilation of minimum knowledge and skills necessary to qualify for a specific watch station, maintain specific equipment, or perform as a team member within a unit.

Watch stations refer to those watches normally assigned by a watch bill, and in the majority of cases, are operator oriented. Maintenance standards are tasks pertaining to technical upkeep of systems of units of equipment, such as a 5"/54 Mk 45 group maintenance supervisor. Performance of a team member can best be described as standards that refer to the knowledge and skills appropriate for standardized qualifications that are not peculiar to a specific watch station or piece of equipment but apply more broadly within the unit, such as a member of a damage control party.

A complete list of all PQS materials currently available in the Navy supply system is contained in the *PQS Catalog,* NAVEDTRA 43100-5, which is updated quarterly. For further information describing the implementation, logistics, and management of the PQS program, refer to the *Personnel Qualification Standards (PQS) Management Guide,* NAVEDTRA 43100-1.

The PQS program is not designed as a training program but provides many training objectives. PQS should be used as a key element of a well structured and dynamic unit training program. Training, especially at the informal (or shipboard) level, is a constantly ongoing process. These are not all of the training processes in existence, but the ones you will encounter most frequently.

EFFECTIVE TRAINING

LEARNING OBJECTIVES: Discuss how you can make available training effective.

Since we have identified the importance of training, we must also point out the importance of the ability to conduct this training; in other words, the ability to be an effective teacher. Any time you show someone how to do something, you have performed the function of being a teacher. As a supervisor, you are going to be called upon more and more to fill this role. You are expected to impart your accumulated skills and experience to your personnel as necessary to make them efficient in the performance of their duties. You should be able to teach by both the formal and the informal methods. The majority of the instruction you will provide is going to be informal. You maybe required to teach personnel in a number of areas, ranging from general military information and skills to the performance of a specialized technical operation.

To be an effective teacher, you should have some specific skills as well as being adequately prepared. First, you should be well versed and very knowledgeable in the material that you are teaching. It is virtually impossible to impart a level of knowledge to someone if you do not understand what you are teaching in the first place.

No matter what you are trying to teach, you should take a personal interest in the preparation and presentation of the material involved. If you stand up in front of a group of people and speak in a monotone, displaying an attitude of obvious boredom, you have failed as an instructor and wasted a lot of valuable time. This type of attitude tells whoever you are trying to teach you do not believe what you are telling them is important or worth knowing about. Consequently, they are not going to pay attention to what you say or do, because they also are going to become bored and disinterested. When preparing your instruction or lesson plan, you should look for ways to make the material you plan to present as interesting as possible. Repetition should only be done to emphasize the importance of the material being presented.

One of the most important attributes of a supervisor (an instructor) is **self-confidence.** A person's confidence is based upon one's knowledge of the job, and most importantly, one's own personal belief in his or her abilities. Confidence begets confidence. A weak or unsure supervisor will not inspire confidence in the people around him or her. A supervisor who demonstrates his or her knowledge, and the confidence to use that knowledge, will usually inspire others to attempt to gain and use the same knowledge.

Just as is true inmost other operations, training also includes a certain degree of quality control. This is accomplished through such media as testing, questionnaires, and demonstration of the skills acquired from the training. What you are doing is determining whether or not the training you conduct is actually successful

All training should be conducted with the maximum technical support available. This technical support may be available in the form of publications, procedural guides, information handouts, safety precautions, and even hands-on operations. The more you can reinforce the subject matter being taught with examples, the more likely the material you are teaching will be retained by the students.

MANAGEMENT OF SHIPBOARD TRAINING

Because of the enormous amount of training involved at the shipboard level, close attention should be paid to ensure that a workable training plan is instituted aboard your ship. Depending upon such variables as the size of your ship, the number of personnel in the crew, and the ship's mission, the methods of training are going to vary. But no matter what the size of the ship and crew, you are going to be involved in the planning and implementation of the on-board training program. A typical table for the organization of shipboard training is shown in figure 13-21.

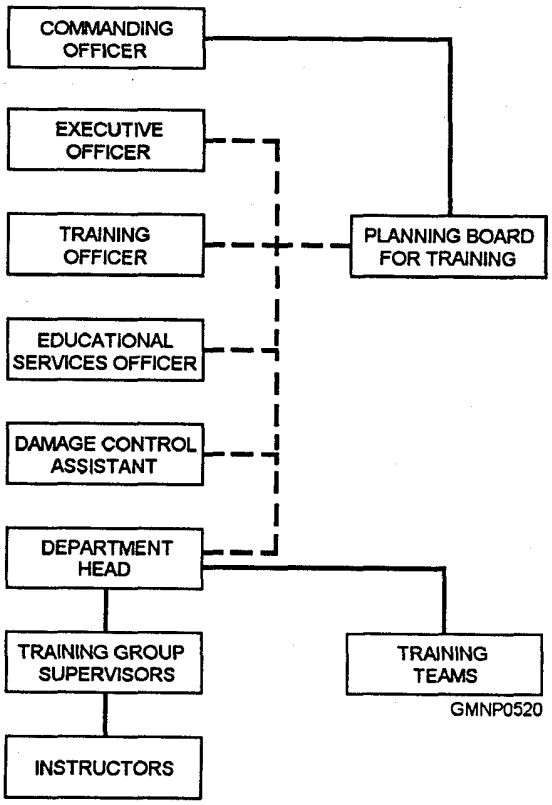

Figure 13-21.—Shipboard training organization.

PLANNING BOARD FOR TRAINING

The Planning Board for Training (PB4T) is responsible for developing and maintaining an ongoing unit training program. This board reports to the commanding officer, and, as a minimum, should be comprised of the following personnel:

Executive officer (also designated as the chairperson)

Department heads

Damage control assistant

Educational services officer

Training officer

Command master chief

3M coordinator

Medical officer (or senior corpsman)

Safety officer

Other personnel may be assigned to the planning board as required by specific training evolutions. Although you should be familiar with most of the personnel in the above list, it should be pointed out that the training officer is a separate (or collateral) billet as required by the size of the command. The training officer is designated by the commanding officer to assist the executive officer in the execution of the command training programs. He or she has specific duties within the scope of the training mission of the command that should not be confused with the duties of the educational services officer (ESO).

The Planning Board for Training meets at least on a monthly basis and primarily performs the following general functions:

1. Assist the commanding officer in the establishment of command training policies.

2. Establish the training program for the command and periodically reviews schedules within the training program to evaluate training effectiveness and progress.

3. Establish a training syllabus for officers and another for enlisted personnel.

This is by no means the extent of the responsibilities of the PB4T. The board can meet as often as deemed necessary by the chairman and may include whatever personnel required to perform the specific training functions. Guidelines for the Planning Board for Training are located in *Standard Organization and Regulations of the U.S. Navy (SORM), OPNAVINST*

3120.32. These guidelines are also provided in the individual SORM of the command.

TRAINING PLANS

LEARNING *OBJECTIVES:* Discuss ship or station training plans and how they impact on readiness.

Now that your ship's training organization has been established, the next step of the training process is to determine what training is necessary and get it scheduled. If you look at the amount and variety of training for your particular ship's crew, you should realize what a large undertaking this can be. Training has to be scheduled and accomplished for virtually every member of the ship's company. It is required in all areas-from every day shipboard routine to specifics in rate skills necessary for an individual to perform his or her duties within the work center. As you can see, training plans are important tools in the control of training programs at all levels aboard ship. Shipboard training plans (or schedules) are of two types-long-range and short-range. These plans should be developed by taking into account the ship's operating schedule, daily routine, availability of required personnel, and any evolution that may affect scheduling.

LONG-RANGE TRAINING PLAN

The long-range training plan is the basic instrument for the planning and recording of all training schedules and is used to keep all personnel informed of projected training goals and operating schedules. This schedule is initially developed and maintained by the department head and training officer. The department head is responsible for consolidating the training information for his or her department. He or she will forward it to the training officer. The training officer then consolidates the long-range plans received from all the department heads, adds all unit level training requirements (e.g., GNT, indoctrination training), and presents it to the executive officer for review. The plan then goes to the commanding officer for approval. Once approved, this package becomes the unit's long-range training plan. A copy of applicable portions is provided to each training group (work center, team, etc.). This plan provides the framework for the preparation of the quarterly and monthly training plans, which contain more detailed information about each of the training requirements, The long-range training plan should be prepared using an OPNAV Form 3120/1A (fig. 13-22), and training events should be prioritized in the following sequence:

- Schedule fleet exercises, trials, inspections, and any other major evolutions that may be required by the type or fleet commanders.
- Schedule all required exercises required by the type commander to maintain a state of C1 readiness.
- Schedule any other applicable unit exercises.
- Schedule all other unit training. Some examples of unit training are damage control lectures, security force training, general Navy training (GNT), and telephone talker/lookout training.

Once the long-range plan has been developed and implemented, then the short-range training plan is setup and put into operation.

SHORT-RANGE TRAINING PLAN

Because of the complexity of the day-to-day operations of a ship, you should pay careful attention to the scheduling of training evolutions. A short-range training plan enables your unit to anticipate how much training can actually be accomplished, based upon the planning for short periods of time in the future. Initially, the short-range training is developed at PB4T, but the plan is carried out at all levels of training within the unit. Basically, the short-range training plan encompasses the quarterly, monthly, and weekly training plans.

Quarterly Training Plan

During the Planning Board for Training of the last month of a quarter, the training officer should distribute copies of the Quarterly Employment Schedule to all of the board members. This schedule provides information about the ship's operational commitments, such as deployments and overhaul periods. Using it as a planning guide, the PB4T develops broad unit training plans for the upcoming quarter. The purpose of this quarterly training plan is to inform the individual training groups of any unit plans that may affect the scheduling of training group evolutions. Once the quarterly plan has been developed for the whole unit, department heads then insert any additional departmental plans or evolutions and distribute the plan to the groups within their respective departments. The scheduling of any training during periods of less than a quarter in length should be accomplished at the

LONG RANGE TRAINING PLAN

FIRST QUARTER AFTER REGULAR OVERHAUL JULY (CALENDAR YEAR) - SEPTEMBER (CALENDAR YEAR)

CONFIDENTIAL (WHEN FILLED IN)

PREPARED

	JULY					AUGUST				SEPTEMBER					OCT
	1 4	7	14	21	28	4	11	18	25	1	8	15	22	29	4 6
Employment	Regular Overhaul LBEACH			RFS		TYT WESTPAC (SOT)				REFRESHER TRAINING SDIEGO					
Major Maintenance Projects, Trials and Tests	Port periods Complete OVHL 1 SS GEN	Deck Trials on 8th	Sea Trials on 14th	(Note Much of the information in this section of the Long Range Training Plan should be drawn from PMS schedule)											
Inspections and Examinations	P O head exam on 2nd	Lower decks loop (work) on 11th		Pers loop on 26th		E-4 Exam on 5th E-5 on 7th	E-6 Exams on 12th E-7 on 14th	Dept Heads Submit to XO Complete RFT Check off	TRE by FTG						
Operational Readiness Exercises (Complete)							Z-36-G on 12th Z-21-G on 13th								
Team Training Ashore	ASW Team Training. ASW School		AAW Team Training AAW School						RFT Seal work (see ship's RFT seal sheet)						
School Training Ashore (Individual)	AIC (ENS & RDC)			OOD Seal (2 ENS)					RFT Seal work (see ship's RFT seal sheet)						
	ENG Off Seal (LTJG)														
General and Operational Drills	CDO Conduct Z-27-D daily except Sunday with the Duty Section when in port			Z-10-D & Z-11-D 25th, 29th & 31st		Z-21-G, Z-34-G, Z-29-G, Z-3-E, Z-5-E, Z-6-E, Z-23-E, Z-24-E, Z-28-E, Z-31-E, Z-32-E, Z-33-E, Z-10-D, Z-11-D, Z-12-E, Z-25-D, Z-36-D, Z-29-D, Z-32-D, Z-7-N, Z-3-S, Z-5-S, Z-11-S, Z-16-S, Z-29-S, Z-10-CC, Z-13-CC, Z-1-C, Z-2-C, Z-6-C, Z-7-C, Z-9-C, X-13-C, Z-1-ET, Z-2-ET, Z-5-ET, Z-7-ET, Z-16-ET						Drills and Exercises in accordance with FTG Weekly Schedule				
Professional Training	(Note The details of this section of the Long Range Training Plan should be completed by Department Division Officers from the Division or Department instruction schedule.)														
OPS															
NAV															
WEPS															
SUP															
ENGR															
General Military Training	First Aid	General Safety	Physical Fitness	Veterans Benefits	UCMJ	Safe Driving	Personal Health	VD Prevention							
Officer Training				Maneuver Board	Leadership Discussion	JO Ship Handling	Piloting	Tactical Comm							
Miscellaneous Activities				Land Storm 21st Land Ammo. 26th											
	1 4	7	14	21	28	4	11	18	25	1	8	15	22	29	4 6

SAMPLE PAGE - - - UNCLASSIFIED

GMNP0521

Figure 13-22.—Long-Range Training Plan.

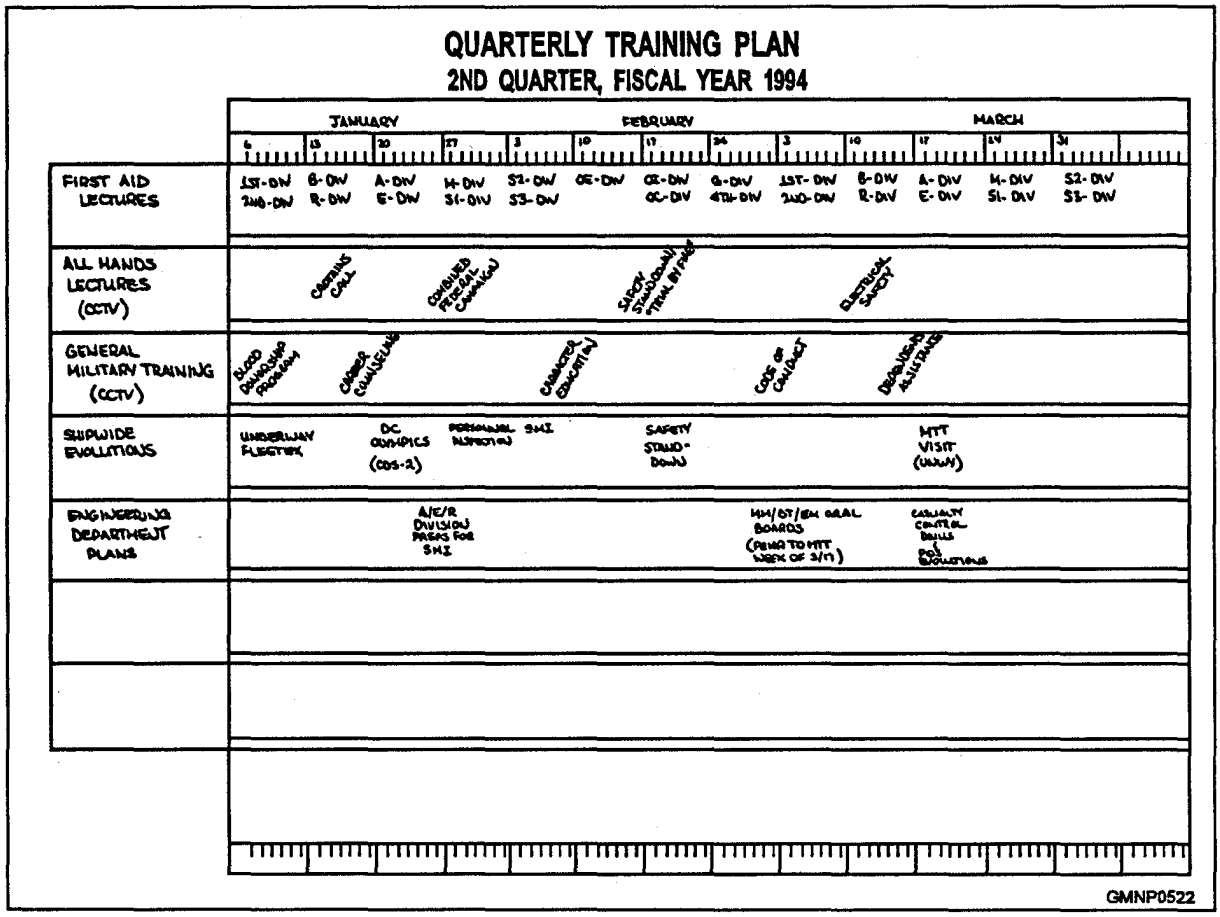

Figure 13-23.—Quarterly Training Plan.

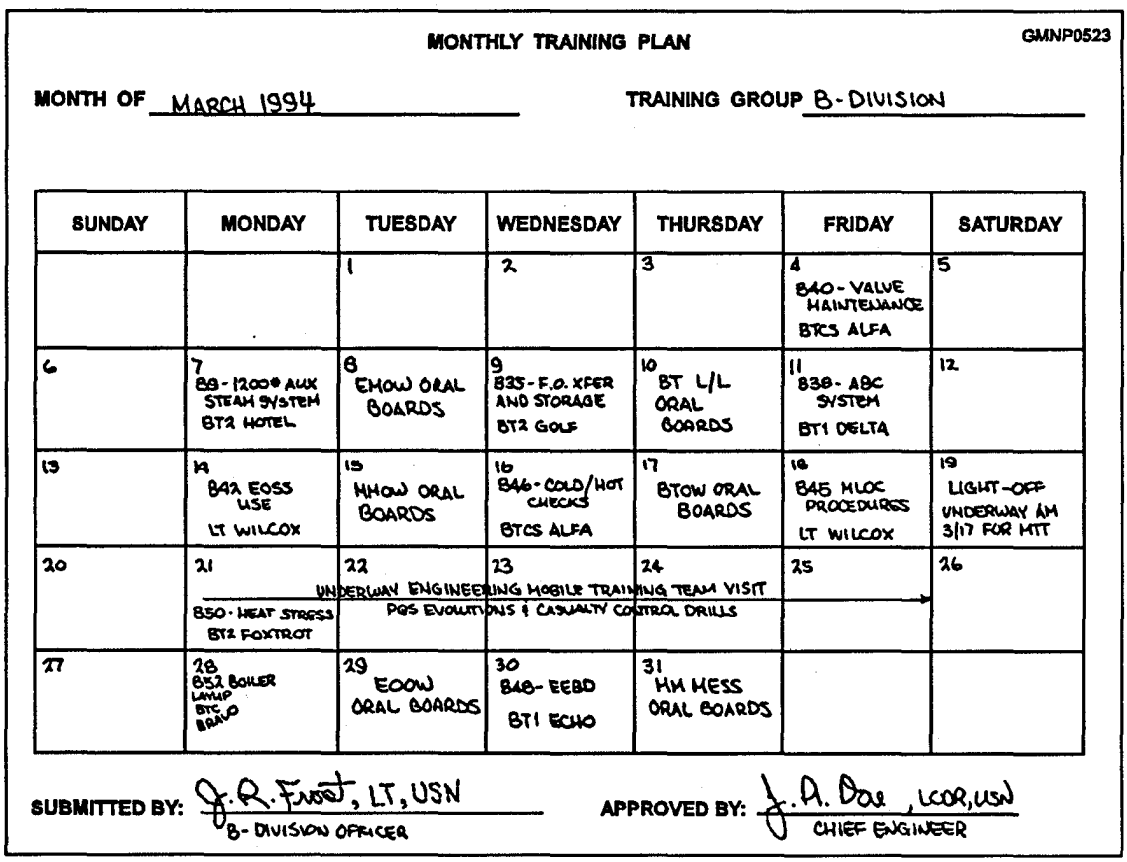

MONTHLY TRAINING PLAN

GMNP0523

MONTH OF MARCH 1994 TRAINING GROUP B-DIVISION

SUNDAY	MONDAY	TUESDAY	WEDNESDAY	THURSDAY	FRIDAY	SATURDAY
		1	2	3	4 B40 - VALVE MAINTENANCE BTCS ALFA	5
6	7 B8 - 1200# AUX STEAM SYSTEM BT2 HOTEL	8 EMOW ORAL BOARDS	9 B35 - F.O. XFER AND STORAGE BT2 GOLF	10 BT L/L ORAL BOARDS	11 B38 - ABC SYSTEM BT1 DELTA	12
13	14 B42 EOSS USE LT WILCOX	15 MMOW ORAL BOARDS	16 B46 - COLD/HOT CHECKS BTCS ALFA	17 BTOW ORAL BOARDS	18 B45 MLOC PROCEDURES LT WILCOX	19 LIGHT-OFF UNDERWAY AM 3/17 FOR MTT
20	21 B50 - HEAT STRESS BT2 FOXTROT	22 UNDERWAY ENGINEERING MOBILE TRAINING TEAM VISIT PGS EVOLUTIONS & CASUALTY CONTROL DRILLS	23	24	25	26
27	28 B52 BOILER LAYUP BTC BRAVO	29 EOOW ORAL BOARDS	30 B48 - EEBD BT1 ECHO	31 MM MESS ORAL BOARDS		

SUBMITTED BY: J. R. Frost, LT, USN
B-DIVISION OFFICER

APPROVED BY: J. A. Doe, LCDR, USN
CHIEF ENGINEER

Figure 13-24.—Monthly Training Plan.

departmental level. Figure 13-23 shows a Quarterly Training Plan that might be used aboard ship.

Monthly Training Plan

Using the quarterly training plan as a guide, each training group (or work center) submits a proposed monthly training plan to their cognizant department head. This schedule should be provided to the department head no later than the last week of the month. It should indicate what training is to be conducted during the following month, on what days it will be held, and who will conduct the training. The department head receives the monthly plans from all of the groups within his of her department. They serve as his or her primary input for the scheduling of training at PB4T. The monthly training plan for an engineering division is shown in figure 13-24, but remember that this schedule is also maintained at the department and unit levels.

Weekly Training Plan

Each week the department head should provide his or her training groups with a weekly schedule for training. Basically, this schedule should include all training applicable to his or her department, but each division should get this weekly training plan for the planning of their own division-level training evolutions. No changes should be made to this schedule without the approval of the department head. As shown in figure 13-25, information provided in the weekly training plan should include, as a minimum, the training to be held, the time it is to be conducted, and where it is to be conducted.

WEEKLY TRAINING SCHEDULE

WEEK OF: 6-12 MARCH 199 DEPARTMENT ENGINEERING

SUNDAY 3/6	MONDAY 3/7	TUESDAY 3/8	WEDNESDAY 3/9	THURSDAY 3/10	FRIDAY 3/11	SATURDAY 3/12
DUTY SECTION I DUTY ENGINEER EXERCISE BOTH FIRE PARTY AND R&A TEAM	0815 FIRST AID LECTURE R-DIV MESS DECKS - HM1 PILL 1230-DIV TRNG A-A13 AC&R BOAT SHOP HM1 ROMEO B-B42 EOSS/EOOC LT WILCOX BERTHING COMP M-M42 EOSS/EOOC LT WILCOX BERTHING COMP E-E12 SP PUMPS IC SHOP IC2 MIKE R-R14 P-250 HT SHOP HT3 TANGO	1000-ALL HANDS ELECT SAFETY ON CCTV 1300-CAPTAIN'S MAST 1600-MMOW ORAL BOARDS IN CHIEFS MESS	1230-DIV TRNG A-A11 REFERS BOAT SHOP HM2 SIERRA B-B46 COLD/HOT CHECKS BTCS ALFOL BERTHING COMP. M-M46 COLD/HOT CHECKS MMCM SMITH FWD E.R. E-E31 GYROS IC SHOP IC3 PAPA R-R5 HKV GASMASK HT SHOP HT4N OSCAR	0815 FIRST AID LECTURE B-DIV MESS DECKS - HM1 PILL 1500-DUTY ENG COMMENCE MLOC PROCEDURES FOR SATURDAY LIGHT OFF 1600-BTOW ORAL BOARDS IN CHIEFS MESS	1230-DIV TRNG A-A37 MAIN DRAIN BOAT SHOP EN1 PETERS B45 MLOC BERTHING COMP LT WILCOX M-M45 MLOC BERTHING COMP LT WILCOX E-E17 SSTGS IC SHOP EM1 DOLAN R-R40 TALL HT SHOP HT3G WILLIAMS	DUTY SECTION III DUTY ENGINEER EXERCISE BOTH FIREPARTY AND R&A TEAM 1500 LIGHT PIPES IN 1A BOILER- MTT VISIT NEXT WEEK - ALL DIV OFFS ENSURE PERSONNEL ARE BRIEFED ON SCHEDULE

PROMULGATED BY: J. A. Doe, LCDR, USN
CHIEF ENGINEER

GMNP0524

Figure 13-25.—Weekly Training Plan.

TRAINING RECORDS

LEARNING OBJECTIVES: Discuss the importance of up-to-date and thorough training records.

Try to remember how many different kinds of training you have received during your years in the Navy. Now imagine how your service record would look if all of this training had been entered into it in a hodgepodge manner. It would certainly be a lot of paperwork, to say the least. For this reason, training records should be kept to an absolute minimum. Usually, your personnel record will contain only the formal schools and training you have received. Certain major PQS accomplishments or watch stations may also be considered significant enough to be recorded in an individual's service record. However, most PQS accomplishments should be treated in the same manner as GNT and placed in the division records accordingly. It is still important to maintain some kind of on-board records to keep track of what training has been conducted, when it was conducted, and what personnel received the training. One of the simplest ways of recording training is by use of the General Record (Type II) (OPNAV Form 1500-31). Figure 13-26 shows the

GENERAL RECORD (Type II)
OPNAV FORM 1500-31 (10-80)
S/N 0107-LF-701-0000

PERIOD COVERED FROM 3/6/86 TO

TITLE
B-DIVISION TRAINING RECORD

COLUMN CAPTIONS	3/10/86 B42 EOSS REQCLEAR LT WILCOX	3/11/86 ELECT SAFETY CCTV	3/12/86 B46 WATCHSTANDERS BTCS ALFA	3/13/86 FIRE AID-BUNKS LIMA BRAVO	3/15/86 BTRJ MAIL BOARDS	3/18/86 B45 MLAC LT WILCOX			
BTCS A.A. ALFA	X	X	INST.	X	BOARD MEMBER	X			
BTC B.B. BRAVO	X	X	X	X	BOARD MEMBER	X			
BT1 C.C. CHARLIE	X	X	X	X	X	X			
BT1 D.D. DELTA	X	X	X	X	X	X			
BT1 E.E. ECHO	X	X	X	X	X	X			
BT2 F.F. FOXTROT	X	X	X	X	X	X			
BT2 G.G. GOLF	X	X	X	X	X	X			
BT2 H.H. HOTEL	LV	LV	LV	LV	X	X			
BT3 I.I. INDIA	X	X	X	X	NA	X			
BT3 J.J. JULLIET	X	X	X	X	NA	X			
BT3 K.K. KILO	X	X	X	X	NA	X			
BT3 L.L. LIMA	X	X	X	X	NA	X			
BT3 M.M. MIKE	LIB	X	X	X	NA	X			
BT3 N.N. NOVEMBER	X	X	X	X	NA	X			
BT3 O.O. OSCAR	X	X	X	X	NA	X			
BT3 P.P. PAPA	X	X	X	X	NA	X			
BT3 R.R. ROMEO	X	X	X	LIB	NA	X			
BT3 S.S. SIERRA	X	X	X	X	NA	X			
BTFN T.T. TANGO	LIB	X	X	X	NA	X			
BTFA U.U. UNIFORM	X	X	X	X	NA	X			
BTFA V.V. VICTOR	X	W.P.	X	X	NA	X			
FA W.W. WILLIAM	X	X	X	X	NA	X			
FA X.X. XRAY	X	U.A.	U.A.	U.A.	NA	U.A.			
FA Z.Z. ZEBRA	X	X	X	X	NA	X			

GMNP0525

Figure 13-26.—Division Training Record.

use of this form in recording training conducted for an entire division. This form could also be used to record an individual's on-board training. These local records should be maintained by the group supervisor for as long as the individuals listed maybe assigned to the unit.

Another important local record with which you may be concerned is the Division Officer's Personnel Record Form (NAVPERS 1070/6). Although this form is not strictly a training record, it does contain personal, training, and qualification information regarding assigned personnel. This form (figs. 13-27A and 13-27B) is required to be maintained as part of the Division Officer's Notebook. If it is maintained properly, it is an invaluable source of information regarding an individual's training accomplishments while he or she has been aboard. This form, and any other personal record of training the individual has received while aboard, should be given to him or her upon his departure from the command As stated before, the use of training records should be kept to a minimum, but whatever training records are used should be maintained as correctly and as up-to-date as possible.

SUMMARY

Although this chapter is titled "Administration and Training," its primary purpose is to make you aware of the more complicated administrative and training procedures involved at the management level. Use of the CSMP, PMS reports, local logs, and admin and training records were demonstrated as valuable aids in analyzing equipment and personnel trends. These records can be invaluable to you in the prediction of breakdowns or conditions that might affect your work center or the operational capabilities of your ship. The need for the organization and maintenance of technical libraries has also been described.

In somewhat more detail, the functions and some procedures have been provided regarding CSRRs/CSRTs, the casualty reporting (CASREP) system, and the management of conventional ammunition (including the basic guidelines for ammunition transaction reporting).

The calibration and repair of test equipment and measuring tools has been described with the emphasis placed on the administrative and follow-up processes of the METCAL Program.

A short segment has been provided to emphasize the importance of effective instruction and supervision of training programs.

Also described in this chapter is a discussion on how shipboard training is organized and administered via the Planning Board for Training, including the development and implementation of long-range and short-range training plans at the unit, department, and division levels of management.

Finally, a brief description of local training records is included to inform you of what is available to you for the documentation of training aboard your unit.

Because it is impractical to provide all the information about these programs in this text, we have noted the reference publications and instructions you will need to assist you in the more important administrative and training functions in which you winy probably become involved.

DIVISION OFFICER'S PERSONNEL RECORD FORM
NAVPERS 1070/6 (REV.9-75)
S/N 0106-LF-010-7035

PRIVACY ACT STATEMENT

Authority to request the information in this form is derived from 5 United States Code 301, Departmental Regulations. Purpose of this form is to provide the Division Officer with readily accessible data concerning personnel in his/her division. The information is used by the Division Officer to manage and administer his / her personnel; to determine training needed; to record training completed; to maintain readily accessible data concerning performance, work assignment, and other personnel data to enable the Division Officer to guide and counsel those assigned to him / her. Disclosure of the following items of information on this form is manditory: name, rate, SSN, local address and phone number (if applicable), billet space / living space / bunk number (if applicable). Disclosure of the following item of information is voluntary: reenlistment intentions, rate desired, special qualifications, name of wife, names and ages of children. Other items of information may be obtained from member's service record. Failure to provide those required items of information listed above may result in administrative action being taken; no action will be taken if the individual refuses to disclose those voluntary items of information.

NAME		RATE	☐ USN ☐ USNR	SSN	NEC / PRI / SEC
DIVISION	SECTION	BILLET SPACE		LIVING SPACE	BUNK NUMBER
DATE OF BIRTH	RELIGION			SECURITY CLEARANCE	
DATE OF FIRST ENLIST.	DATE REPORTED ABOARD	EXPECTED LOSS DATE		REENLISTMENT INTENTIONS	
DATE OF PRESENT RATE	RATE DESIRED	ELIGIBLE NEXT RATE		CONTINUOUS SERVICE	
SPECIAL QUALIFICATIONS OR INTERESTS				GENERAL QUARTERS STATION	
				UNDERWAY WATCH STATION	
PERMANENT HOME ADDRESS AND PHONE NUMBER		LOCAL ADDRESS AND PHONE NUMBER			
MARITAL STATUS	NO. OF DEPENDENTS	NAME OF WIFE			
NAMES AND AGES OF CHILDREN					
NEXT OF KIN		RELATIONSHIP	ADDRESS AND PHONE NUMBER		

PREVIOUS DUTY				LEAVE RECORD				
DATE REPORTED	UNIT	DIVISION	DESCRIPTION OF DUTY	FROM	TO	TYPE	NO. DAYS	BALANCE

SEMI-ANNUAL MARKS

PERIOD ENDING	PROFESSIONAL PERFORMANCE	MILITARY BEHAVIOR	LEADERSHIP AND DUPERVISORY ABILITY	MILITARY BEARING	ADAPTABILITY

GMNP0526

Figure 13-27A.—Division Officer's Personnel Record Form (front).

DIVISION OFFICER'S PERSONNEL RECORD FORM
NAVPERS 1070/6 (Rev. 9-75) (Back)

AWARDS AND COMMENDATIONS

DISCIPLINARY RECORD

FORMAL EDUCATION

HIGH SCHOOL				MAJOR SUBJECTS
9	10	11	12	
COLLEGE				
1	2	3	4	

BASIC BATTERY SCORES

GCT	ARI	MECH	CLER	ETST	SONAR	RADIO	FLAT

GED

☐ HIGH SCHOOL ☐ COLLEGE	PART I SCORE	PART II SCORE	PART III SCORE	PART IV SCORE	PART V SCORE

NAVAL EDUCATION AND ADVANCEMENT RECORD

ITEM	TITLE	DATE COMPLETED	MARK	TITLE	DATE COMPLETED	MARK
SERVICE SCHOOLS						
MILITARY CORRESPONDENCE COURSES						
OTHERS						

PRACTICAL FACTORS		SERVICE-WIDE RATING EXAMINATIONS		
RATE	DATE COMPLETED	DATE	RATE	RESULTS

FIRST AID	SWIM	TEL. TALKER	FIRE FIGHT'G	DRIVER	TRUCK DRIVER	BUS DRIVER	COX'SN	BOAT ENG.					

PROFESSIONAL QUALIFICATION STANDARDS

WATCH	DATE COMM	% PROGRESS	DATE QUAL	WATCH	DATE COMM	5 PROGRESS	DATE QUAL

GMNP0527

★U.S. Government Printing Office: 1983 - 505 - 010 / 6509 2 - 1

Figure 13-27B.—Division Officer's Personnel Record Form (back).

APPENDIX I

GLOSSARY

A-END— hydraulic pump that controls the output of the B-end through a valve plate and a constant speed motor.

AAW— Anti-air warfare.

ASUW— Anti-surface warfare.

ASW– Anti-submarine warfare.

AUR— All up round.

B-END— Converts fluid power from the A-end into a rotary mechanical motion.

BASE— The after end of the projectile.

BENCH MARKS— Installed for each equipment that has an alignment telescope and used throughout the life of the ship to verify alignment.

BICONVEX— A supersonic fin shape that causes considerable drag but is the strongest fin design.

BITE— Built-in test equipment.

BODY– The main part of the projectile and contains the greatest mass of metal.

BOURRELET— The smooth machined area that acts as a bearing to stabilize the projectile during its travel through the gun bore.

C&D— Command and Decision.

CAB UNIT— An A-end and B-end combination.

CCS— Central control station, same as Damage Control Central (DCC) on some ships.

CENTER-LINE REFERENCE MARKS— Established during initial construction to represent the ship's center line.

CENTER-LINE REFERENCE PLANE (CRP)— The reference used to establish the train zero alignment of all of the combat system equipment aboard ships.

CIC— Command information center.

CONREP— Connected replenishment between ships.

CONTROL SURFACE— Provides the necessary steering corrections to keep the missile in proper flight attitude and trajectory.

CONTROL SYSTEM— Responds to orders from the guidance system and steers the missile toward the target.

CONTROLLED AREA— A security area that surrounds an exclusion area.

CORRECTIVE MAINTENANCE— The replacement of components that are identified as worn, defective, or broken.

COSAL— An established shipboard allowance of parts for installed equipment.

CROSS WIND— The wind that blows at the right of the LOF.

CSMP— Current ships' maintenance project.

CYCLIC RATE OF FIRE— The maximum rate at which a weapon will fire in automatic operation, stated in rounds per minute.

DCC— Damage control central, same as Central Control Station (CCS) on some ships.

DEAD TIME— The time interval between the instant the fuze is set and the instant the projectile is fired.

DETONATORS— A device used in initiating high-explosive bursting charges.

DoD— Department of Defense.

DORSAL FIN— The stationary fin provided for in-flight stability and some lift.

DoT– Department of Transportation.

DOUBLE WEDGE— A supersonic fin shape that offers the least drag but lacks strength.

DRAG— The resistance offered by the air to the passage of the missile through it.

DTRM— Dual thrust rocket motor made of a solid-fuel propellant.

DUD-JETTISON UNIT— Ejects missiles overboard that fail to fire and are unsafe to return to the magazine.

EFFECTIVE CASUALTY RADIUS— The radius of a circular area around the point of detonation within which at least 50 percent of the exposed personnel will become casualties.

ELECTRICAL ZERO— The reference point for alignment of all synchro units.

ESCU— Electronic servo control unit.

ESI– Explosive safety inspection.

ESM— Electronic support measures.

EW— Electronic warfare.

EXCLUSION AREA— A security area that contains one or more nuclear weapons or one or more components of a nuclear weapon.

EXPLOSION— The practically instantaneous and violent release of energy which results from a sudden chemical change of a solid or liquid substance into gases.

EXPLOSIVES— Those substances or mixtures of substances that when suitably initiated by flame, spark, heat, electricity, friction, impact, or similar means, undergo rapid chemical reactions resulting in the rapid release of energy.

EXUDATE— A mixture of lower melting isomers of TNT, nitrocompounds of toluene of lower nitration, and possible nitrocompounds of other aromatic hydrocarbons and alcohols.

FCS— Fire control system.

FIXED AMMUNITION— Ammunition that has the cartridge case crimped around the base of the projectile.

FLASH POINT— The temperature in which lubricants give off a vapor.

FOD— Foreign object damage.

FUZES— The initiating device that detonates the warhead (payload).

GCP— Gun control panel.

GMLS— Guided missile launching system.

GMTR— Guided missile training round.

GUIDANCE SYSTEM– Keeps the missile on its proper flight path.

HERO— Hazards of Electromagnetic Radiation to Ordnance.

HIGH-PRESSURE (HP) AIR— Pneumatic air pressure ranging from 3,000 to 5,000 psi.

HSD— Heat sensing devices that are used in detection of slow or fast rise in temperature for automatic activation of magazine sprinkler systems.

HYDROSCOPIC— Explosives that easily absorbs moisture.

ICS– Integrated control station.

IFF— Identification friend or foe.

INITIAL VELOCITY (IV)— The speed at which a projectile is traveling at the instant it leaves the gun bore.

IPB— Illustrated parts breakdown is a publication that describes and illustrates all the components used in ordnance equipment.

LED— Light-emitting diode.

LIFT— The upward force that supports the missile in flight.

LOF— Line of fire is used to position the gun bore with respect to the LOS.

LOS— Line of sight is used to establish the present location of the target.

LOW-PRESSURE (LP) AIR— Pneumatic air pressure ranging up to 150 psi.

MACH NUMBER— The ratio of missile speed to the local speed of sound.

MAGAZINE AREA— The compartment, spaces, or passages on board ship containing magazine entrances that are intended to be used for the handling and passing of ammunition.

MAGAZINE— Any compartment, space, or locker that is used, or intended to be used, for the stowage of explosives or ammunition of any kind.

MAIN RELIEF VALVE— Protects the CAB unit from excessive pressure buildup and cavitation of the A-end.

MASTER REFERENCE PLANE (MRP)— The plane used as the machining reference to establish the foundation of the combat systems equipment. After initial construction, the MRP is only used as a reference plane following major damage or modernization.

MAXIMUM EFFECTIVE RANGE— The greatest distance at which a weapon maybe expected to fire accurately to inflict damage or casualties.

MAXIMUM RANGE— The greatest distance that the projectile will travel.

MCC– Main control console.

MEDIUM PRESSURE (MP) AIR— Pneumatic air pressure ranging from 151 to 1,000 psi.

MFCS— Missile fire control system.

MHE— Materials-handling equipment (industrial).

MODIFIED DOUBLE WEDGE— A supersonic fin shape that has relatively drag and is stronger.

MRC— Maintenance requirement cards.

NALC— Navy ammunition logistics code.

NEC— Navy enlisted classification code.

NEEW— The Net Equivalent Explosive Weight.

NPN— A transistor with the arrow that points away from the base.

NTDS— Naval tactical data system.

NWS— Naval Weapons Station.

OFFSET CENTER-LINE REFERENCE MARKS– Established during initial instruction to facilitate combat systems alignment. They are installed to prevent repeating center-line surveys during subsequent alignments.

OGIVE— The forward portion of a projectile.

OJT— On-the-job training.

ORDALTS— Authorized ordnance alterations.

ORTS— Operational readiness test system.

OSG— Order signal generator.

PA— System operating pressure ranging from 1,400 to 1,700 psi.

PC— Printed circuit card.

PDP– Power distribution panel.

PITCH— The turning rotation of a missile about its lateral axis.

PNP— A transistor with the arrow that points towards the base.

POWER OFF BRAKE— Stops the equipment movement during power failures, secures equipment movement against pitch and roll of the ship when system is inactive, provides for manual hand cranking during emergencies, installation, and maintenance.

PQS— Personnel qualification standards.

PREVENTIVE MAINTENANCE— The regular lubrication, inspection, and cleaning of equipment.

PRIMARY MAGAZINES— Ammunition stowage spaces, generally located below the main deck, and insofar as is practical, below the water-line.

PRIMERS— A device used to initiate the burning of a propellant charge by means of a flame.

PROPELLANTS— A device used to provide a pressure that, acting against an object to be propelled, will accelerate the object to the required velocity.

PRP— Pneumatically released pilot valve.

PYROTECHNIC— A device used for illumination, marking, and signaling.

Q-D— Quantity-Distance.

QUAL/CERT— Explosives-Handling Personnel Qualification Certification Program.

RANGE WIND— The wind that blows along the LOF, either with or against the projectile.

READY-SERVICE STOWAGE— Ammunition stowage facilities in the immediate vicinity of the weapon served.

READY-SERVICE MAGAZINES— Spaces physically convenient to the weapons they serve; they provide permanent stowage for part of the ammunition allowance.

RESERVOIRS— Used to dissipate heat, remove contamination, separate air, and store fluid in hydraulic systems.

RFI— Radio frequency interference.

RFI— Ready for issue.

ROLL— The rotation of a missile about the longitudinal axis.

ROTATING BAND— The circular band made of commercially pure copper, copper alloy, or plastic seated in a scored cut in the after portion of the projectile body.

RSR— Ready service rings.

SEPARATE-LOADING AMMUNITION— Ammunition that is gun sizes 8 inches and larger.

SEPARATED AMMUNITION— Ammunition that consists of two units-the projectile assembly and cartridge assembly.

SERVO PRESSURE— Hydraulic fluid pressure ranging from 400 to 500 psi.

SHIP BASE PLANE (SBP)— The basic plane of origin and is perpendicular to the CRP and includes the base line of the ship.

SIGHT DEFLECTION— The angle that the plane through the gun bore is deflected left or right from the LOS.

SIGHT ANGLE— The difference between the LOF and LOS and measured perpendicular to the trunnion axis.

SLIP RING— Provides a continuous electrical connection between the cabling of the stationary structure of the gun mount or launcher and a rotary joint for the cooling system piping.

SMALL ARMS— Any firearm with a caliber (cal.) of .60 inch or smaller and all shotguns.

SMS— Surface missile system.

STREAM— Standard tensioned replenishment alongside method.

SUPERCHARGE PRESSURE— Hydraulic fluid pressure up to 150 psi.

SUSTAINED RATE OF FIRE— The average number of rounds fired per minute with the number of minutes this rate can be sustained without damage to the weapon.

TDD— Target detection device.

THRUST— The force that propels the missile forward at speeds sufficient to sustain flight.

USCG— United States Coast Guard.

VAC— Volts of alternating current.

VDC— Volts of direct current.

VERTREP— Vertical replenishment by helo to ship.

VISCOSITY— The measurement of internal resistance to flow of fluids.

VLA— Vertical launch asroc.

VLA— Vertical launching system.

WARHEAD— The payload of the missile.

WCS— Weapons control system.

WDS— Weapons direction system.

WEAPON CONTROL REFERENCE PLANE (WCRP)— This plane is established during initial construction and used during alignment verification.

YAW— The turning of a missile about the vertical axis.

APPENDIX II

REFERENCES USED TO DEVELOP THIS TRAMAN

NOTE

Although the following references were current when this TRAMAN was published, their continued currency cannot be assured. You, therefore, need to ensure that you are studying the latest revision.

Chapter 1

Ammunition Afloat, NAVSEA OP 4, Commander, Naval Sea Systems Command, Washington, DC, 1988.

Identification of ammunition, NAVSEA SW010-AF-ORD-010, Commander, Naval Sea Systems Command, Washington, DC, 1990.

Navy Gun Ammunition, NAVSEA *SW030-AA-MMO-010,* Commander, Naval Sea Systems Command, Washington, DC, 1985.

Pyrotechnic, Screening Marking, and Countermeasure Devices, Volume 1, NAVSEA SW050-AB-MMA-010, Commander, Naval Sea Systems Command, Washington, DC, 1990.

Transportation and Storage Data for Ammunition, Explosives, and Related Hazardous Materials, Volume 2, NAVSEA SW 020-AC-SAF-020, Commander, Naval Sea Systems Command, Washington, DC, 1995.

United States Navy Ammunition, Historical and Functional Data, NAVSEA SW010-AB-GTP-010, Commander, Naval Sea Systems Command, Washington, DC, 1981.

United States Navy Ordnance Safety Precautions, NAVSEA OP 3347, Commander, Naval Sea Systems Command, Washington, DC, 1972.

Chapter 2

Ammunition Afloat, NAVSEA OP 4, Commander, Naval Sea Systems Command, Washington, DC, 1988.

Approved Harding Equipment for Weapons and Explosives, NAVSEA OP 2173, Volumes 1 and 2, Commander, Naval Sea Systems Command, Washington, DC, 1971.

Approved Handling Equipment for Weapons and Explosives, NAVSEA OP 2173, NAVAIR 19-100-1.1, Naval Sea Systems Command, Washington, DC, 1981.

Explosives-Handling Personnel Qualification and Certification (Qual/Cert) program, COMNAVSURFLANTINST 8023.4F/COMNAVSURFPAC-INST 8023.5B, Commander, Naval Surface Force, U.S. Atlantic Fleet, Norfolk, VA, and Commander, Naval Surface Force, U.S. Pacific Fleet, San Diego, CA, 1991.

Functional Introduction to Vertical Launching System Mk 41, NAVSEA SW394-AF-MMO-020/050VLS, Commander, Naval Sea Systems Command, Washington, DC, 1992.

Handling Ammuntion, Explosives, and Hazardous Materials with Industrial Materials-Handling Equipment (MHE), NAVSEA OP 4098, Commander, Naval Sea Systems Command, Washington, DC, 1978.

Identification of Ammunition, NAVSEA SW010-AF-ORD-010, Commander, Naval Sea Systems Command, Washington, DC, 1990.

Magazine Sprinkler Systems, NAVSEA S9522-AA-HBK-010, Commander, Naval Sea Systems Command, Washington, DC, 1989.

Navy Gun Ammunition, NAVSEA SW030-AA-MMO-010, Commander, Naval Sea Systems Command, Washington, DC, 1985.

Shipboard Ammunition Handling and Stowage, Naval Ship' Technical Manual, S9086-XG-STM-010, Chapter 700, Naval Sea Systems Command, Washington, DC, 1991.

Transportation and Storage Data for Ammunition, Explosives, and Related Hazardous Materials, Volume 2, NAVSEA SW 020-AC-SAF-020, Commander, Naval Sea Systems Command, Washington, DC, 1995.

Chapter 3

25MM M242 Automatic Gun, Description Operation and Illustrated Parts Breakdown (IPB), SW360-AB-MMO-010, Commander, Naval Sea Systems Command, Washington, DC, 1990.

U.S. Department of the Air Force, *Military Shotgun, 12 Gauge, Pump Action, Model 870,* TO 11W3-6-2-1, Secretary of the Air Force, Washington, DC, 1972.

U.S. Department of the Army, *Browning Machine Gun, Caliber .50 HB, M2,* Field Manual, FM 23-65, Headquarters, Department of the Army, Washington, DC, 1972.

U.S. Department of the Army, 40-MM *Grenade Launcher M79,* Technical Manual, TM 9-1010-205-10, Headquarters, Department of the Army, Washington, DC, 1985.

U.S. Department of the Army, *40-MM Grenade Launcher M79,* Technical Manual, TM 9-1010-205-24, Headquarters, Department of the Army, Washington, DC, 1972.

U.S. Department of the Army, *40-MM Grenade Launcher M303,* Technical Manual, TM 9-1010-221-10, Headquarters, Department of the Army, Washington, DC, 1984.

U.S. Department of the Army, *Machine Gun, 7.62-MM, M60,* Technical Manual, TM 9-1005-224-10, Headquarters, Department of the Army, Washington, DC, 1985.

U.S. Department of the Army, *Machine Gun, 7.62-MM, M60,* Technical Manual, TM 9-1005-224-24, Headquarters, Department of the Army, Washington, DC, 1987.

U.S. Department of the Army, *Machine Gun, 40-MM, Mk 19, Mod 3,* Technical Manual, TM 9-1010-230-10, Headquarters, Department of the Army, Washington, DC, 1991.

U.S. Department of the Army, *Mortar, 60MM, M224,* Technical Manual, TM 9-1010-223-10, Headquarters, Department of the Army, Washington, DC, 1987.

U.S. Department of the Army, *Mortar, 81-MM, M29A1,* Technical Manual, TM 9-1015-200-10, Headquarters, Department of the Army, Washington, DC, 1985.

U.S. Department of the Army, *Pistol, Caliber .45, Automatic, M1911A1,* Technical Manual, TM 9-1005-211-12, Headquarters, Department of the Army, Washington, DC, 1968.

U.S. Department of the Navy, *Pistol, semiautomatic, 9mm M9,* Technical Manual, Navy SW 370-AA-OPI-010/9mm, Headquarters, Department of the Navy, Washington, DC, 1990.

U.S. Department of the Army, *Revolver, Caliber .38 Special: Smith and Wesson Military and Police, M10, Technical Manual, TM 9-1005-206-14&P-1,* Headquarters, Department of the Army, Washington, DC, 1985.

U.S. Department of the Army, *Rifle, 5.56-MM, M16,* Technical Manual, TM 9-1005-249-10, Headquarters, Department of the Army, Washington, DC, 1985.

U.S. Department of the Army, *Rifle, 7.62-MM, M14,* Technical Manual, TM-9-1005-223-10, Headquarters, Department of the Army, Washington, DC, 1972.

U.S. Department of the Army, *Rifle, 7.62-MM, M14,* Technical Manual, TM 9-1005-223-20, Headquarters, Department of the Army, Washington, DC, 1972.

Chapter 4

Basic Machines, NAVEDTRA 10624-A1, Naval Education and Training Support Service, Washington, DC, 1988.

Compressed Air Plants and Systems, Naval Ships' Technical Manual, Chapter 551, Commander, Naval Sea Systems Command, Washington DC, 1987.

Fluid Power, NAVEDTRA 12964, Naval Education and Training Program Management Support Activity, Pensacola, FL, 1990.

Guided Missile Launching System Mk13 Mods 4, 5, 6, and 7 NAVSEA OP 4470, Naval Sea Systems Command, Washington, DC, 1991.

Guided Missile Launching System Mk26, SW394-HO-MMO-010, Naval Sea Systems Command, Washington, DC, 1986.

Chapter 5

5"/54-Caliber Gun Mount Mark 45 Mod 0, NAVSEA OP 3392, Volume 1, Commander, Naval Sea Systems Command, Washington, DC, 1973.

5"/54-Caliber Gun Mount Mark 45 Mod 1, Volume 1, Part 1, NAVSEA SW323-01-MMO-010, Commander, Naval Sea Systems Command, Washington, DC, 1985.

*76-mm 62-Caliber Gun Mount Mark 75 Mos 0 and 1, SW314-AO-*MMM-010/GM MK 75 0-1, Commander, Naval Sea Systems Command, Washington, DC, 1981.

Guided Missile Launching System Mk13 Mods 4, 5, 6, and 7 NAVSEA OP 4470, Naval Sea Systems Command, Washington, DC, 1991.

Navy Electricity and Electronics Training Series, Module 1, *Introduction to Matter, Energy, and Direct Current,* NAVEDTRA 172-01-00-79, Naval Education and Training Program Development Center, Pensacola, FL 1979.

Navy Electricity and Electronics Training Series, Module 2, *Introduction to Alternating Current and Transformers,* NAVEDTRA 172-02-00-85, Naval Education and Training Program Development Center, Pensacola, FL, 1985.

Navy Electricity and Electronics Training Series, Module 3, *Introduction to Circuit Protection, Control, and Measurement,* NAVEDTRA 172-03-00-85, Naval Education and Training Program Development Center, Pensacola, FL 1985.

Navy Electricity and Electronics Training Series, Module 16, *Introduction to Test Equipment,* NAVEDTRA 172-16-00-84, Naval Education and Training Program Development Center, Pensacola, FL, 1984.

Chapter 6

5"/54-Caliber Gun Mount Mark 45 Mod 0, NAVSEA OP 3392, Volume 1, Commander, Naval Sea Systems Command, Washington, DC, 1973.

5"/54-Caliber Gun Mount Mark 45 Mod 1, Volume 1, Part 1, NAVSEA SW323-01-MMO-010, Commander, Naval Sea Systems Command, Washington, DC, 1985.

*76-mm 62-Caliber Gun Mount Mark 75 Mods 0 and 1, SW314-AO-*MMM-010/GM MK 75 0-1, Commander, Naval Sea Systems Command, Washington, DC, 1981.

Clearing of Live Ammunition from Guns, NAVSEA SW300-BC-SAF-010, Commander, Naval Sea Systems Command, Washington, DC, 1985.

Chapter 7

Guided Missile Launching System Mk13 Mods 4, 5, 6, and 7 NAVSEA OP 4470, Naval Sea Systems Command, Washington, DC, 1991.

Guided Missile Launching System Mk26, SW394-HO-MMO-010, Naval Sea Systems Command, Washington, DC, 1986.

Guided Missile Launching System Mk41, SW394-AF-MMO-010, Naval Sea Systems Command, Washington, DC, 1991.

Guided Missile Training Round Mk60 Mod 6, SW850-A6-MMO-010, Naval Sea Systems Command, Washington, DC, 1984.

Tomahawk Weapons System Mk 36 and Mk 37 Block III SW261-DE-MM0-030/Tomahawk, Department of the Navy, Program Executive Officer, Cruise Missiles Project and Unmanned Aerial Vehicles Joint Project Office, Washington, DC, 1994.

Chapter 8

Guided Missile Launching System Mk13 Mods 4, 5, 6, and 7 NAVSEA OP 4470, Naval Sea Systems Command, Washington, DC, 1991.

Guided Missile Launching System Mk26, SW394-HO-MMO-010, Naval Sea Systems Command, Washington, DC, 1986.

Guided Missile Launching System Mk41, SW394-AF-MMO-010, Naval Sea Systems Command, Washington, DC, 1991.

Guided Missile Training Round Mk60 Mod 6, SW850-A6-MMO-010, Naval Sea Systems Command, Washington, DC, 1984.

Tomahawk Weapons System Mk 36 and Mk 37 Block III, SW261-DE-MM0-030/Tomahawk, Department of the Navy, Program Executive Officer, Cruise Missiles Project and Unmanned Aerial Vehicles Joint Project Office, Washington, DC, 1994.

Chapter 9

Safety Precautions for Standard Missile SM-1, SM-2, and VLS (MR & ER) Guided Missiles, Commander, Naval Sea Systems Command, Washington, DC, 1988.

*Tomahawk Weapons System Mk 36 and Mk 37 Block III SW261-DE-MM0-*030/Tomahawk, Department of the Navy, Program Executive Officer, Cruise Missiles Project and Unmanned Aerial Vehicles Joint Project Office, Washington, DC, 1994.

Chapter 10

Fire Controlman Third Class, NAVEDTRA 10276-1, Naval Education and Training Program Management Support Activity, Pensacola, FL 1988.

Guided Missile Training Round Mark 60 Mod 4, NAVSEA SW850-A4-MM0-010, Commander, Naval Sea Systems Command, Washington, DC, 1989.

Gunfire Control System (GFCS) Mk 86 Mods 8, 9, and 10, NAVSEA OP 4543, Volume 1, Commander, Naval Sea Systems Command, Washington, DC, 1982.

Maintenance Manual for Fire Control System Mk 92 Mod 2, Description, Operation, and Maintenance (U), SW271-C2-MMO-010/(C) Mk *92* Mod *2,* Volume 1, Part 1, Commander, Naval Sea Systems Command, Washington, DC, 1987.

Shipboard Electronics Material Officer, NAVEDTRA 10478-A1, Naval Education and Training Program Development Center, Pensacola, FL, 1982.

Chapter 11

Technical Manual for Theory of Combat Systems Alignment, SW225-AO-MMA-010/OP762, ALIGNTHEORY, Commander, Naval Sea Systems Command, Washington, DC, 1987.

Chapter 12

Basic Machines, NAVEDTRA 10624-A1, Naval Education and Training Program Management Support Activity, Pensacola, FL 1988.

Basic Military Requirements, NAVEDTRA 12043, Naval Education and Training Program Management Support Activity, Pensacola, FL, 1992.

Blueprint Reading and Sketching, NAVEDTRA 12014, Naval Education and Training Program Management Support Activity, Pensacola, FL 1988.

Fluid Power, NAVEDTRA 12964, Naval Education and Training Program Management Support Activity, Pensacda, FL 1990.

Lubrication of Ordnance Equipment, NAVSEA OD 3000, Commander, Naval Sea Systems Command, Washington, DC, 1978.

Ship Configuration and Logistics Support System, NAVSEA Technical Specification System, 9090-700A Commander, Naval Sea Systems Command, Washington, DC, 1988.

Technical Manual for Theory of Combat Systems Alignment, SW22S-AO-MMA-010/OP762, ALIGNTHEORY, Commander, Naval Sea Systems Command, Washington, DC, 1987.

Chapter 13

Combat Systems Readiness Review (CSRR), COMNAVSURFLANTINST 9093.1, Commander, Naval Surface Force, United States Atlantic Fleet, Norfolk, VA, 1984.

Conventional Ammunition Integrated Management System (CAMS), SPCC Instruction 8010.12, SPCC, Mechanicsburg, PA, 1992.

IM 3 & 2, NAVEDTRA 10193-D, Naval Education and Training Program Management Support Activity, Pensacola, FL 1986.

Operational Reports, NWP 10-1-10, Office of CNO, Washington, DC, 1987.

Physical Security Instruction for Conventional Arms, Ammunition, and Explosives, OPNAVINST 5530.13, CNO, Washington, DC, 1991.

Physical Security and Loss Prevention Manual, OPNAV Instruction 5530.14, CNO, Washington, DC, 1983.

Ships' Maintenance Material Management (3-M) Manual, Department of the Navy, Office of the Chief of Naval Operations, Washington, DC, 1987.

Standard Oganization and Regulations of the U.S. NAVY (SORN), OPNAVINST 3120.32, CNO, Washington, DC, 1987.

A

B

C

D

E

F

G

H

I

J

L

M

N

O

P

Q

R

S

T

W

Assignment Questions

Information: The text pages that you are to study are provided at the beginning of the assignment questions.

ASSIGNMENT 1

Textbook Assignment: "Explosives and Pyrotechnics," chapter 1, "Ammunition, Magazines, and Missile Handling," chapter 2, and "Small Arms," chapter 31 pages 1-1 through 3-62.

1-1. Military explosives are divided into what two general classes?

1. High and very high
2. High and medium
3. High and low
4. Medium and low

1-2. High explosives are usually produced from what type of products?

1. Nitration products of organic substances
2. Powered metals
3. Waxes
4. Plasticizing oils

1-3. What is the definition of a low explosive?

1. Combustible materials that do not decompose rapidly but do normally detonate
2. Combustible materials that decompose rapidly but do not normally detonate
3. Non-combustible materials that do not decompose rapidly but do normally detonate
4. Non-combustible materials that decompose rapidly and normally detonate

1-4. The detonation velocity of high explosives is measured in what unit?

1. Feet per second
2. Feet per minute
3. Meters per second
4. Seconds per foot

1-5. What device on the Mk 45 gun mount prevents a flareback?

1. Flash guard
2. Gas-expelling devices
3. Breech block
4. Empty case ejector

1-6. Which of the following terms is a measure of the shattering ability of an explosive?

1. Brisance
2. Heat
3. Sensitivity
4. Stability

1-7. The sensitivity of an explosive is measured in what manner?

1. By the melting point
2. By the length of time an explosive can be kept under normal stowage conditions without deterioration
3. By the amount of energy necessary to initiate an explosion
4. By the range of temperatures that will ignite it

1-8. What method of initiation of an explosive reaction is used in Naval guns ?

1. Heat
2. Influence
3. Pressure
4. Shock

1-9. Which of the following terms describes a device used to initiate the burning of a propellant charge by means of a flame?

1. Booster
2. Detonator
3. Main charge
4. Primer

1-10. Which of the following statements best describes regressive burning?

1. The surface area of the grains decrease as they burn
2. The inner surface increases and the outer surface decreases as they burn
3. The total surface area remains the same as it burns
4. The surface area increases

1-11. What is the oldest explosive known?

1. Black powder
2. Nitrocellulose
3. Smokeless powder
4. SPC

1-12. Which of the following ordnance does NOT use black powder?

1. JATO
2. Mk 45 full-service charge
3. Practice bombs
4. Saluting charges

1-13. What is the chemical make-up of a powder with the class designation letters of SPCF?

1. Smokeless powder, blended, water-drying process
2. Smokeless powder, stabilized by ethyl centrality, flashless powder
3. Smokeless powder, stabilized by diphenylamine, flashless powder
4. Smokeless powder, nonhygroscopic, reworked by grinding

1-14. What is the most commonly used primary (initiating) explosive?

1. Diazodinitrophenol
2. Lead azide
3. Lead styphnate
4. Tetryl

1-15. Composition A-5, a booster explosive, is a mixture of which of the following chemicals?

1. 97.5% RDX, 1.5% calcium stearate, 0.5% graphite
2. 98.5% RDX, 1.5% stearic acid
3. 95% HMX, 5% fluoroelastomers
4. 100% tetryl

1-16. What are the principal explosives used in the main-charge (burster) explosives filler for gun projectiles?

1. Composition A-5, RDX, explosive D
2. Composition A-5, PBXN-5, explosive D
3. Composition A-3, RDX, TNT
4. Composition A-3, RDX, explosive D

1-17. Which of the following is the most powerful, most used, and most brisant of the military high explosives?

1. Composition A-3
2. Composition A-5
3. HMX
4. RDX

1-18. What explosive is used in projectiles that must penetrate hard targets, such as armor, without detonating?

1. Explosive D
2. PBX
3. Composition C-3
4. PBXN-106

1-19. In the Navy, pyrotechnics are NOT used for which of the following purposes?

1. Blasting
2. Illuminating
3. Marking
4. Signaling

1-20. The Mk 58 marine location marker contains what total number of pyrotechnic candles?

1. One
2. Two
3. Three
4. Four

1-21. The Mk 58 marine location marker burns approximately what total number of minutes?

1. 10 to 20
2. 20 to 40
3. 40 to 60
4. 60 to 80

1-22. What pyrotechnic is found in Navy life rafts?

1. Mk 6
2. Mk 13
3. Mk 58 Mod 0
4. Mk 58 Mod 1

1-23. Pyrotechnics information is in which of the following NAVSEA publications?

1. SW050-AB-MMA-010
2. SW300-BC-SAF-010
3. SW310-AC-MNA-010
4. SW320-CD-MMA-010

1-24. What is the title of NAVSEA OP 4?

1. Ammunition Ashore
2. Ammunition Afloat
3. United States Navy Ordnance Safety Precautions
4. Ammunition Handling

1-25. Gun ammunition is most commonly classified in what manner?

1. By gun size
2. By assembly configuration
3. By service use
4. By purpose

1-26. Which of the following is NOT a type of ammunition that is classified by assembly?

1. Fixed
2. Separated
3. Separate-loading (bagged gun)
4. Target and training

1-27. Target and training ammunition is in what ammunition classification?

1. Gun size
2. Assembly configuration
3. Service use
4. Construction

1-28. A PUFF projectile is in what ammunition classification?

1. Gun size
2. Assembly configuration
3. Practice
4. Construction

1-29. A dummy projectile and a drill projectile are used for the same purpose.

1. True
2. False

1-30. Which of the following fuzes is most often used with an armor-piercing projectile?

1. Auxiliary
2. Combination
3. Percussion
4. Time

1-31. What factor does the number 78 represent in the ammunition lot number AMC7QD018-124B?

1. The year of production
2. A code signifying the month of production
3. The lot intermix number
4. The lot sequence number

1-32. What factor is represented by a yellow band painted on a 5-inch projectile?

1. The ammunition contains a toxic agent
2. The ammunition contains an irritant agent
3. Identifies rocket motors
4. Identifies high explosives

1-33. After the item is expended or transfered, the master stock record cards and the ammunition lot/serial location cards are retained for what maximum period of time?

1. 1 year
2. 2 years
3. 1 month
4. 6 months

1-34. What publication contains information on ammunition compatibility stowage within a ship's magazine?

1. NAVSEA OP-4
2. NAVSEA OP-5
3. SW300-BC-SAF-010
4. SW323-AF-MMO-010

1-35. Magazine spaces are intended for what type of stowage?

1. Ammunition only
2. Grease cans
3. Oily waste rags
4. Personal materials

1-36. How often should magazines aboard ship be inspected?

1. Daily
2. Weekly
3. Monthly
4. Bimonthly

1-37. Magazine temperature logs should contain a separate section listing the results of which of the following actions?

1. Prefire
2. Postfire
3. Magazine inventory
4. Sprinkler system test

1-38. Magazine sprinkler systems are designed to completely flood their designated spaces within what total number of minutes?

1. 10
2. 30
3. 40
4. 60

1-39. The test fittings or test castings for the Bailey and Cla-Val models of magazine sprinkler control valves are NOT interchangeable.

1. True
2. False

1-40. The two orifices installed in the control system piping of magazine sprinkling systems are of what size?

1. 0.050 inch
2. 0.065 inch
3. 0.098 inch
4. 2.5 mm

1-41. Prior to loading or unloading any ammunition, what action or activity should be outlined and promulgated in the form of a weapons department notice?

1. The arrival conference
2. The ammunition inspection plan
3. The loading/offloading plan
4. The inventory of handling equipment

1-42. Anyone who handles ammunition or operates ammunition-handling equipment must be certified under what program?

1. Explosives Ordnance Handling
2. Explosives-Handling Personnel Qualification and Certification (Qual/Cert)
3. NAVSEA OP 4
4. Handling Equipment for Weapons and Explosives

1-43. Who is responsible for safety while handling ammunition?

1. Chief Gunner's Mate
2. Everyone involved
3. Leading Petty Officer
4. Weapons Officer

1-44. The wheels on a Mk 6 missile transfer dolly can only be locked in what positions?

1. 0° or 180°
2. 45° or 225°
3. 60° or 240°
4. 90° or 270°

1-45. What is the maximum effective range, in yards, of the .45-cal. pistol?

1. 25
2. 50
3. 75
4. 90

1-46. What action, if any, requires detailed disassembly of the .45-cal. pistol?

1. Prefiring cleaning
2. Postfiring cleaning
3. Repair
4. None

1-47. Which of the following knowledge is essential to do a good job of cleaning and repair on any weapon?

1. IPB
2. The nomenclature of parts
3. Firing characteristics
4. Repair parts in stock

1-48. On the .45-cal. pistol, the safety lock locks and blocks which of the following components?

1. Locks the slide in the rear position, blocks the sear to keep the hammer in the half-cock position
2. Locks the slide in the forward position, blocks the sear to prevent any movement of the sear out of the full-cock notch of the hammer
3. Locks the slide in the rear position, blocks the firing pin
4. Locks the slide in the forward position, blocks the sear against the firing pin

1-49. The M9 pistol magazine has a total capacity of how many rounds?

1. 5
2. 7
3. 15
4. 30

1-50. The M9 pistol has a maximum effective range of how many meters?

1. 25
2. 50
3. 75
4. 90

1-51. The M14 rifle gas spindle valve is OFF when in which of the following positions?

1. Horizontal
2. Left
3. Right
4. Vertical

1-52. The M14 rifle gas spindle valve is turned to the OFF position for what purpose?

1. For cleaning
2. For automatic firing
3. To use the line-throwing projectile
4. To fire tracers

1-53. On the Remington M870 shotgun, where is the safety located?

1. Across the front of the trigger guard
2. Across the rear of the trigger guard
3. On the fore-end assembly
4. Top of the stock

1-54. On the Remington 870 shotgun, what is the recommended procedure for unloading a chambered unfired round?

1. Push the safety to the FIRE position, pull the fore-end assembly rearward
2. Push the safety to the SAFE position, push the fore-end assembly forward
3. Push the safety to the SAFE position, press in the action bar lock, pull the fore-end assembly slowly rearward
4. Push the safety to the FIRE position, point the weapon in a safe direction, squeeze trigger

1-55. On the Remington 870 shotgun, after pulling the trigger, pulling the fore-end assembly rearward will open the action and accomplish which of the following actions?

1. Unlock, extract, and cock only
2. Unlock, extract, eject, and cock only
3. Unlock, extract, eject, cock and feed cycle only
4. Unlock, extract, eject, cock, feed cycle and reload tubular magazine

1-56. Before operating the .50-cal. machine gun, what important prefire check requirement must be conducted?

1. Clean bore
2. Inspect the headspace and timing
3. Inspect ammunition
4. Oil moving parts

1-57. Due to the high temperature of the barrel, the .50-cal. machine gun, once fully loaded, should always be kept pointed in a safe direction or cleared during breaks in firings because what situation could possibly exist?

1. A "cook-off"
2. A "hangfire"
3. A "misfire"
4. A "meltdown"

1-58. When firing the M60 machine gun at a 1000 yard target, what total number of clicks of rear sight adjustment must be made to correct a one yard error in elevation?

1. One
2. Two
3. Three
4. Four

1-59. The 25mm M242 automatic gun is powered by which of the following devices during normal operations?

1. Hydraulic power drive
2. Manual hand crank
3. Electric motor powered by a 24-volt battery
4. Electric motor powered by ships 440-volt supply

1-60. When firing the M79 grenade launcher at target ranges from 50 to 80 meters, the rear sight frame assembly, if should be in what position?

1. Lowered, battle sight
2. Upright, adjusted to 50 meters
3. Upright, adjusted to 80 meters
4. Removed, no sight necessary

1-61. Standard hand grenades have delay fuzes that delay detonation for what total numbers of seconds?

1. One to two
2. Four to five
3. Seven to ten
4. Ten to eleven

ASSIGNMENT 2

Textbook Assignment: "Basic Mechanism," chapter 4, "Electrical and Electronic Circuit Analysis," chapter 5, and "Gun Mounts," chapter 6, pages 4-1 through 6-24.

2-1. What gear allows a driven gear to be turned in the same direction as the drive gear?

1. Bevel
2. Idler
3. Rack-and-pinion
4. worm

2-2. What gear allows for a change in angular direction in a gear train?

1. Bevel
2. Idler
3. Rack-and-pinion
4. worm

2-3. What gear is used in cases where linear motion is desired?

1. Bevel
2. Idler
3. Rack-and-pinion
4. Worm

2-4. A vernier coupling serves what function on gun mounts?

1. Transmits motion only
2. Corrects for a misaligned shaft
3. Fine adjustment
4. Increases shaft speed

2-5. In a hydraulic system most malfunctions result from which of the following causes?

1. Contamination
2. Filters
3. Solenoids
4. Valves

2-6. What device triggers an indication to the system operator that the filter is clogged?

1. Automatic shut-down switch
2. Bypass value
3. Equipment slow
4. FCS

2-7. What type of hydraulic power drive in ordnance equipment is the most used?

1. Accumulator
2. Axial piston pump
3. Manual pump
4. Rotary pump

2-8. What is the main purpose of a CAB type power drive?

1. To boost hydraulic pressure
2. To produce a mechanical output
3. To provide hydraulic fluid output
4. To regulate hydraulic pressure

2-9. What is the operational speed of a CAB type power drive?

1. Low
2. Medium
3. High
4. Variable

2-10. The tilt plate in a CAB unit is able to rotate a maximum of 40 degrees.

1. True
2. False

2-11. On a CAB unit, what device connects the A-end to the B-end, both physically and hydraulically?

1. Rotating cylinder
2. Stroking piston
3. Tilt plate
4. Valve plate

2-12. CAB unit B-end direction of rotation is determined by which of the following actions?

1. Electric motor rpms
2. Speed of the stroking pistons
3. Direction of tilt applied to the tilt plate
4. Varying hydraulic psi to the stroking pistons

2-13. In a gun mount hydraulic system, servo and supercharge fluids are provided by what device?

1. Dual gear pump assembly
2. Rotating cylinder
3. Tilt plate
4. Valve plate

2-14. In a gun mount or GMLS, what hydraulic component is servo fluid distributed?

1. Ammunition handling
2. CAB unit
3. RSR
4. Power drive

2-15. What hydraulic system is supercharge fluid distributed?

1. Ammunition handling
2. CAB unit
3. RSR
4. Power drive

2-16. On a launcher of a gun mount with a CAB type of power drive, what device, if any, secures against the roll and pitch of the ship when the power is off?

1. CAB unit
2. Power-off brake
3. Manual securing pins
4. None

2-17. On the Mk 75 gun mount, the hydraulic system provides hydraulic pressure for operation of the ammunition-handling system and what other component?

1. Cold recoil jacks
2. Revolving magazine
3. Rocking arm assemblies
4. Screw feeder

2-18. On the Mk 75 gun mount, ammunition in the revolving magazine moves in what direction?

1. From the inner circle to the outer circle
2. From the inner circle to the rocking arms
3. From the outer circle to the inner circle
4. From the outer circle to the rocking arms

2-19. On the Mk 75 gun mount rocking arms, ammunition in transit between the screw feeder and the loader drum is held in place by what devices?

1. Hydraulically operated clamps only
2. Mechanically operated clamps only
3. Hydraulically and mechanically operated clamps only
4. Holding pawls

2-20. On the Mk 75 gun mount, the empty case tray is attached to what component?

1. Gun barrel
2. Loader drum
3. Rocking arms
4. Transfer tray frame

2-21. As the transfer tray moves to the DOWN position (in counterrecoil) and the rammer assembly extends, what function(s) is/are performed on the Mk 75 gun mount?

1. A round is rammed in the gun barrel
2. The ejected spent case of the previously fired round is pushed out of the empty case tray into the empty case ejector chute
3. Both 1 and 2 above
4. The breech mechanism is held open during counterrecoil

2-22. The equilibrator and compensator assemblies on the Mk 75 gun mount operate together primarily for what function?

1. Counterbalance
2. Cycling ammunition
3. Misfire operations
4. Remote firing

2-23. The recuperator on the Mk 75 gun mount operates using what type of power?

1. Hydraulic
2. Hydropneumatic
3. Manual
4. Pneumatic

2-24. On the Mk 75 gun mount, what component moves the gun to the hooks position in preparation for firing?

1. Cold recoil jacks
2. Compensator
3. Equilibrator
4. Recuperator

2-25. On the Mk 45 gun mount, the fuze setter operates using what type of power?

1. Electrical
2. Electrohydraulic
3. Hydropneumatic
4. Pneumatic

2-26. What component on the Mk 45 gun mount requires the lower and upper accumulator system to be lit-off to complete its cycle?

1. Cradle
2. Fuze setter
3. Lower hoist
4. Upper hoist

2-27. What is the primary use of HP air in gun systems?

1. Elevation drive
2. Gas ejection system
3. Door seals
4. Train drive

2-28. How are Hall-effect switches actuated?

1. Electrically
2. Hydraulically
3. Magnetically
4. Manually

2-29. Where are optical switches located on the Mk 45 Mod 1 gun mount?

1. Cradle
2. Gas ejection system
3. Hoist
4. Rammer

2-30. What operation of a relay is determined by the time between the closing of the coil circuit and the closing of the relay contacts?

1. Acceleration
2. Distance
3. Speed
4. Weight

2-31. Solenoids convert electrical inputs from control circuits into which of the following outputs?

1. Electrical
2. Hydraulic
3. Mechanical
4. Pneumatic

2-32. The electrical component SIR1 is part of what system on the Mk 45 gun mount?

1. Breech
2. Hoist
3. Loader
4. Rammer

2-33. What information is indicated by the numbers within the gates on a typical logic control circuit?

1. Control panel where the circuit is located
2. Part number of the circuit board
3. Printed circuit board in the EP2 panel on which the circuit is located
4. Voltage of the circuit

2-34. What information is indicated by the numbers on the input and output lines of the gates of a typical logic control circuit?

1. Control panel where the circuit is located
2. Part number of the circuit board
3. Circuit board on which the circuit is located
4. Terminal pin that connects to that point

2-35. What type of synchro is used to position a dial or valve?

1. Control transformer
2. Control transmitter
3. Torque receiver
4. Torque transmitter

2-36. How can a differential synchro be identified?

1. By color code
2. By two rotor leads
3. By three rotor leads
4. By one stator lead

2-37 By changing the synchro receiver lead S2 with S1 or S3, what degree error would result?

1. 90°
2. 120°
3. 180°
4. 270°

2-38 What is the reference point for alignment of all synchro units?

1. Electrical zero
2. Ships centerline
3. System director
4. Tram readings

2-39. What short circuit would cause all receiver dials to stop at 60 degrees or 240 degrees in a properly zeroed TX-TR synchro system?

1. A short from R1 to R2
2. A short from R1 to R3
3. A short from S1 to S2
4. A short from S2 to S3

2-40. What is the function of the Mk 75 gun mount barrel cooling panel?

1. Controls the flow of cool air to the barrel
2. Controls the flow of salt water to flush the gun barrel only
3. Controls the flow of fresh water to cool the gun barrel only
4. Control the flow of fresh and salt water to cool and flush the gun barrel

2-41. The Mk 75 gun mount anti-icing system consist of what total number of heating elements?

1. One for train and six for elevation
2. Three for train and four for elevation
3. Five for train and two for elevation
4. Six for train and one for elevation

2-42. What assembly on the Mk 75 gun mount allows for unlimited training of the mount?

1. Hydraulic motor
2. Power drive
3. Rotary junction box
4. Slip ring

2-43. On the Mk 75 gun mount, what device holds the brake in place when no power is applied to the electric train motor (No. 1)?

1. Air manifold
2. Hydraulic valve
3. Manual hand crank
4. Steel springs

2-44. What device or action releases the train brake when power is applied to the Mk 75 gun mount train system?

1. Air pressure
2. Electromagnet
3. Hydraulic pressure
4. Manual hand crank

2-45. On the Mk 75 gun mount, the three control transformer (CTS) synchros in the train synchro control box are used in what manner?

1. All three are for coarse control
2. All three are for fine control
3. One CT (1X) is for coarse control, one CT (36x) is for fine control, and one CT is a spare
4. One CT (1X) is for fine control and two CTS (36X) are for coarse control

2-46. On the Mk 75 gun mount, of the 10 cams and 10 cam-actuated microswitches in the camstack assembly, which one is the spare?

1. No. 1
2. No. 7
3. No. 3
4. No. 9

2-47. What component, located in the Mk 75 gun mount GCP, supplies power to operate the train and elevation motors?

1. Electronic supply transformer 1J1-T1
2. Main transformer T1
3. Silicon-controlled rectifiers (SCRS)
4. Tilt-angle potentiometer

2-48. The train and elevation systems on Mk 75 gun mount each use 12 silicon-controlled rectifiers (SCRS) to control the drive motors in which of the following actions?

1. Rotation
2. Speed only
3. Direction only
4. Speed and direction

2-49. Which of the following panels on the Mk 45 gun mount contains the electrical power-distribution and power-converting components of the gun mount control system?

1. EP1
2. EP2
3. EP3
4. EP4

2-50. What input on the Mk 13 Mod 4 GMLS Auto-Not-Unload circuit ensures that the launcher rail does not retract during a jettisoning operation unless the guide arm is loaded?

1. KPX4-1
2. SIA1-1
3. SIL1-2
4. SIR1-1

2-51. What input on the Mk 13 Mod 4 GMLS Auto-Not-Unload circuit ensures a Harpoon missile has been disarmed and is safe to jettison?

1. KPX4-1
2. PC67-K9B-1
3. SIL1-2
4. SIR1-1

2-52. What type of breechblock is used on the Mk 45 and Mk 75 gun mounts?

1. Interrupted tread
2. Horizonal sliding wedge
3. Plug
4. Vertical sliding wedge

2-53. The Mk 45 gun mount safety link performs which of the following actions?

1. Attaches the housing to the slide to prevent it from moving if counterrecoil pressure is lost
2. Prevents the gun from firing
3. Prevents personnel from entering the gun pocket
4. Blocks main motor start circuits

2-54. What position on the Mk 45 gun mount aligns a round of ammunition with the fuze setter?

1. Lower hoist
2. Transfer station
3. Upper hoist
4. Upper loading station

2-55. On the Mk 45 gun mount, the breechblock is in what position when open?

1. Down
2. Port
3. Starboard
4. up

2-56. What type of firing system is used on the Mk 75 gun mount?

1. 5 VAC
2. 10 VAC
3. 20 VDC
4. Percussion

2-57. When is a Mk 45 gun mount in a hot gun situation?

1. After 50 rounds have been fired in 4 hours or less
2. After 40 rounds have been fired in 6 hours or more
3. After 25 rounds have been fired in 7 hours or less
4. After the first round fired

2-58. What NAVSEA publication contains flow charts for misfire procedures?

1. SW200-AB-FAS-010
2. SW225-BC-SAF-010
3. SW300-BC-SAF-010
4. SW300-CB-SAF-010

2-59. On the Mk 45 or Mk 75 gun mount, internal water cooling can only be started after which of the following situations has been met?

1. The gun mount is on a safe firing bearing
2. The gun mount crew has evacuated
3. The projectile and powder charge has been removed
4. The powder/propelling charge has been removed

ASSIGNMENT 3

Textbook Assignment: "GMLS: Primary Functions and Descriptions," chapter 7, "GMLS: Secondary and Auxiliary Functions," chapter 8, and "SMS Guided Missiles, Aerodynamics, and Flight Principles," chapter 9, pages 7-1 through 9-24.

3-1. The Mk 13 Mod 4 GMLS does NOT fire which of the following missiles?

1. Harpoon
2. Standard SM-1
3. Standard SM-2
4. Tomahawk

3-2. The Mk 13 Mod 4 GMLS is capable of identifying up to what total number of types of missiles not including the GMTR?

1. 7
2. 8
3. 9
4. 10

3-3. The train and elevation power drives on the Mk 13 Mod 4 GMLS are in what location?

1. In the guide arm
2. In the inner structure
3. In the plenum
4. In the outer shell

3-4. What is the normal mode of operation for the Mk 13 Mod 4 GMLS when loading and unloading a missile on the guide arm?

1. Automatic
2. Exercise
3. Local
4. Step

3-5. During the unload cycle on the Mk 13 GMLS, what device prevents the aft-motion latch from prematurely retracting until the hoist pawl properly engages the aft missile shoe?

1. Actuator arm in the forward left section of the fixed rail
2. Adjustable buckling chain link
3. Proximity switch in the aft right section of the fixed rail
4. Photo cell in the forward left section of the fixed rail

3-6. What action(s) cause(s) the Mk 13 GMLSs launcher retractable rail to retract?

1. The fired missile going into free flight
2. Jettison operations
3. Both 1 and 2 above
4. Unloading operations

3-7. On the Mk 13 GMLS, what component prevents the launching of an incorrect type of missile?

1. The elevation positioner
2. The aft-motion latch
3. The fin opener and contactor assembly
4. The forward-motion latch

3-8. On the Mk 13 GMLS, what device holds a missile in place if it accidentally ignites in the magazine?

1. The aft-motion latch
2. The blast door
3. The forward-motion latch
4. The restraint ring

3-9. The Mk 13 GMLS magazine base has what total number of water injectors?

1. 16
2. 24
3. 48
4. 96

3-10. The RSR on the Mk 13 GMLS can be indexed to what total number of positions?

1. 10
2. 22
3. 32
4. 48

3-11. What device(s) on the Mk 13 GMLS forms a continuous track between the magazine rail of the station at the hoist position and the fixed rail mounted on the carriage base ring?

1. The guide arm
2. The hoist chain
3. The inner and outer retractable rails of the magazine
4. The magazine contactor at the bottom of the magazine

3-12. On the Mk 13 Mod 4 GMLS, in what location, if any, does a Harpoon missile receive its warmup?

1. On the guide arm
2. In the magazine
3. At the weapons station
4. None

3-13. What is the approximate firing rate of the Mk 26 GMLS?

1. One missile every 15 sec
2. Two missiles every 9 sec
3. Two missiles every 3 sec
4. Three missiles every 9 sec

3-14. The Mk 26 GMLS fin opener assembly can unfold and refold the fins of a AAW missile.

1. True
2. False

3-15. What total number of guide rail sections on each guide arm are in a fixed position on the Mk 26 GMLS?

1. One
2. Two
3. Three
4. Four

3-16. What component on the Mk 41 VLS is capable of controlling all missiles in either launcher?

1. BITE
2. LCU
3. MCP
4. RELP

3-17. On the Mk 41 VLS, how long do the cell and uptake hatches remain open after a missile launch?

1. 10 sec
2. 20 sec
3. 30 sec
4. 40 sec

3-18. Who makes the final decision to jettison a missile?

1. Commanding officer
2. Launcher captain
3. Leading Gunner's Mate
4. Weapons officer

3-19. On the Mk 13 GMLS, when remote dud jettisoning is ordered, what effect do the remote circuits have on the train and elevation power drive?

1. . Trains aft, elevation to 45 degrees
2. Trains forward, elevation to 25 degrees
3. Trains port or starboard, elevation to 36 degrees 40 minutes
4. Power drives shut down

3-20. On the Mk 13 GMLS, when the launcher synchronizes to a jettison position, what action initiates the extend and jettison cycles?

1. EP2 operator pushing the DUD-JETTISON-JETTISON push button
2. FCS operator pushing the DUD-JETTISON-JETTISON push button
3. CO pushing the remote jettison button from the bridge station
4. EP2 operator pushing ALL-MOTORS STOP push button

3-21 On the Mk 13 GMLS, what device restricts the flow of hydraulic fluid to the jettison piston and limits the speed of piston travel in the STEP-EXERCISE mode?

1. A plunger valve
2. An orifice plate
3. A synchro system
4. A throttle valve

3-22. The Mk 26 GMLS jettison devices are extended and retracted in what manner?

1. Electrically
2. Hydraulically
3. Hydromechanically
4. Manually

3-23. In what mode of operation on the Mk 26 GMLS are jettison operations usually performed?

1. Auto-load
2. Exercise
3. Step-load
4. Step-unload

3-24. Which of the following is the special Mk 13 Mod 4 strikedown gear?

1. Chain-drive fixture
2. Hand-control unit
3. Manual air-control valve
4. All of the above

3-25. On the Mk 13 Mod 4 GMLS, in what location is the chain-drive fixture installed?

1. Aft end of the guide arm
2. Forward end of the guide arm
3. Aft missile shoe
4. Forward missile shoe

3-26. The strikedown hand control unit controls what factor(s) on the Mk 13 Mod 4 GMLS?

1. Train and elevation launcher movements
2. The elevation positioner (latch)
3. Both power-drive brakes
4. All of the above

3-27. During strikedown operations on the Mk 13 Mod 4, when a missile has been pulled up the guide arm and the chain latches released, what prevents the missile from sliding off the rail?

1. Forward and aft motion latches
2. EP2 panel operator
3. Snubbers
4. Rail latches

3-28. During strikedown offload operations on the Mk 13 Mod 4, what additional step must be taken to lower a missile to the dolly?

1. Forward-motion latch is retracted with a special tool
2. The chain-drive fixture is mounted on the aft end of the guide arm
3. Aft-motion latch is retracted with a special tool
4. EP2 panel operator retracts the chain latches

3-29. On the Mk 26 GMLS, the strikedown control panel is in what location?

1. On the ICS panel
2. On the MCC panel
3. On the guide arm
4. On the underside of the strikedown marine hatch

3-30. What function(s) do the receiver or position pistons serve on the Mk 26 GMLS?

1. Lower the missile from the guide arm to the magazine
2. Raise the missile from the deck to the guide arm
3. Lower and raise the missile between the deck and extended strongback
4. Lower and raise the missile between the strongback and guide arm

3-31. What primary fire- or heat-detecting units are used in a typical GMLS magazine?

1. HSDs
2. PRPs
3. SSDs
4. Water injection

3-32. In a GMLS fixed $C0_2$ system, the supply cylinder when fully charged weighs what total number of pounds?

1. 100
2. 125
3. 165
4. 185

3-33. In a GMLS fixed $C0_2$ system, what device must be closed and tagged before entering the magazine?

1. Local control sprinkler valve
2. Audible alarms
3. Manually operated shutoff valve
4. Remote control pull box

3-34. How is a typical water injection system secured once it is activated?

1. Automatically
2. Hydraulically
3. Manually
4. Pneumatically

3-35. The Mk 26 GMLS water injection system has how many detector nozzle(s) at each RSR hanger rail position?

1. One
2. Two
3. Three
4. Four

3-36. On the Mk 41 VLS, how is the deluge system secured once it has been activated?

1. By the launcher sequencer after 100 sec
2. By the DELUGE RESET switch on the status panel
3. By a two-way manual control valve which secures the saltwater supply
4. All of the above

3-37. Other than for anti-icing, the Mk 26 anti-icing system is used for what other purpose?

1. Blast cooling
2. Strikedown operations
3. Unloading operations
4. Water injection

3-38. The Mk 41 VLS anti-icing system is designed around which of the following areas?

1. Cell hatch
2. Uptake hatch
3. Both 1 and 2 above
4. Water injection system

3-39. What are the advantages of sectionalized construction of a missile?

1. Aerodynamics
2. Handling
3. Strength, simplicity, and easier replacement and repair of components
4. Weight

3-40. Which of the following best describes a boat-tailed missile?

1. The radome is flat
2. The radome is pointed
3. The tail cone contour is streamlined
4. The tail cone is flat

3-41. What are the primary control surfaces for missiles?

1. Turning and speed control
2. Nose and tail control
3. Wing and tail control
4. Speed and range control

3-42. What is the purpose of dorsal fins on a missile?

1. Steering control
2. Lift during flight only
3. Stability during flight only
4. Lift and stability during flight

3-43. What airfoil shape provides the greatest lift with the least drag in subsonic flight?

1. Delta
2. Curved (or camber)
3. Flat
4. Straight

3-44. A missile in flight can have what total number of dimensions of movement?

1. One
2. Five
3. Three
4. Six

3-45 What component(s) in a missiles control system maintains stability while in flight?

1. Gyroscope
2. Cone sections
3. Radome sections
4. Fins

3-46 What is the most predominant fin used in supersonic missiles?

1. Conventional
2. Cruciform
3. V-Tail
4. Vertical

3-47 Which of the following guided missile control surfaces allows steering corrections?

1. Movable tail control
2. Stationary dorsal fin
3. Stationary delta wing
4. Pointed radome

3-48. What type of command guidance system controls the missile from an outside source from boost to terminal phase?

1. Command
2. Composite
3. Homing
4. Self-contained

3-49. What type of missile guidance system uses a small antenna located within the nose and relies on electromagnetic radiation for guidance information?

1. Command
2. Composite
3. Homing
4. Self-contained

3-50. For what type of guidance system will all guidance and control functions be performed totally within the missile?

1. Command
2. Composite
3. Homing
4. Self-contained

3-51. What type of guided missile propulsion engine does not depend on air intake for its operation?

1. Impulse
2. Rocket
3. Thermal jet
4. Turbojet

3-52. What is the major disadvantage of a thermal jet engine?

1. Speed
2. Payload
3. Low altitude
4. Control

3-53. What is a disadvantage of a guided missile with a turbojet engine?

1. Speed
2. Payload
3. Low altitude
4. Control

3-54. Blast-effect warheads are most effective against what type of target?

1. Air
2. Ground
3. Surface
4. Underwater

3-55. Fragmentation warheads are most effective against what type of target?

1. Air
2. Ground
3. Surface
4. Underwater

ASSIGNMENT 4

Textbook Assignment: "Target Detection and Weapons Control," chapter 10, "Alignment," chapter 11, "Maintenance," chapter 12, and "Administration and Training," chapter 13, pages 10-1 through 13-39.

4-1. The uses of high-speed computers, data display consoles, and communication links to collect, anlyze, and correlate sensor data to obtain a clear picture of a tactical situation is known as what type of system?

1. GFCS
2. NTDS
3. UBFC
4. WACS

4-2. The use of raw sensor data in a weapon system is normally reserved for what type of weapons system mode?

1. Casualty
2. Identification
3. Search
4. Track

4-3. Which of the following short-range radar sets is valuable in detecting modern low-flying antiship missiles?

1. AN/SPY-1
2. AN/SPS-48
3. AN/sPs-49
4. AN/SPS-65

4-4. Which of the following radar sets is capable of long-range air target detection but does not provide target elevation information?

1. AN/SPY-1
2. AN/SPS-48
3. AN/SPS-49
4. **AN/SPS-65**

4-5. What type of function is the passive side of the total electronic warfare capability of a ship?

1. ASCM
2. ECCM
3. ESM
4. IFF

4-6. A missile fire control computer continuously updates the solution for target intercept during a missile firing. These actions occur during what part of intercept operations?

1. The terminal phase of missile flight
2. The attempt to fire
3. The target intercept point
4. The midcourse phase of missile flight

4-7. During a WDS tracking exercise, what component provides target bearing and elevation data?

1. Director
2. Gyroscope
3. Radar
4. Stable element

4-8. Which of the following terms identifies the science of a projectile in motion?

1. Ballistics
2. Drift
3. Gravity
4. Parallax

4-9. Which of the following is the primary search and track radar for an AEGIS-equipped ship?

1. AN/SPS-48
2. AN/SPS-49
3. AN/SPS-65
4. AN/SPY-1

4-10. The FCS on an AEGIS-equipped ship consists of four AN/SPG-62A radar sets capable of illuminating multiple targets simultaneously.

1. True
2. False

4-11. Which of the following operability tests provides a tool to make rapid assessments of ship readiness?

1. DSOT
2. OCSOT
3. TRAM
4. STAR CHECKS

4-12. Which of the following Mk and Mod numbers make up the two major subassemblies of a guided missile training round?

1. Mk 6 Mods 1 or 2 and Mk 92 Mod 2
2. Mk 74 Mod 13 and Mk 59 Mod 3
3. Mk 59 Mod 3 and Mk 63 Mods 5 or 6
4. Mk 59 Mod 3 and Mk 56 Mod 1

4-13. In a combat system alignment process, which of the following is the first major alignment step to be accomplished?

1. Establishment of reference points
2. Establishment of parallelism
3. Establishment of bench mark and tram reference readings
4. Establishment of reference planes

4-14. The master reference plane is a plane within the ship parallel to the ship base plane. What is the purpose of the master reference plane?

1. To establish the train zero alignment of all combat systems equipment.
2. To establish the roller path plane of all combat systems equipment.
3. To act as the machining reference to establish the foundation of the combat system equipment.
4. To offset center-line reference marks of the combat systems equipment.

4-15. Bench marks are installed aboard ships that require the use of which of the following equipment?

1. Alignment telescope
2. Breech bar boresight
3. Decoy boresight
4. Star gage

4-16. What alignment check(s) is/are normally conducted using a certified shore tower facility?

1. Bench mark
2. Radar collimation
3. Tram
4. Train and elevation

4-17. Elevation tram readings are taken with the gun mount trained to how many degrees from the bearing of the high point?

1. 50
2. 80
3. 90
4. 180

4-18. Which of the following publications contain further information on combat systems alignment procedures?

1. SW850-A6-MMO-010 and NAVSEA 4160/1
2. SG420-CD-MMM-010 and NAVSEA OP 3392
3. SW360-AC-MMO-010 and SW300-BO-ORD-010
4. SW225-AO-MMA-010/OP762 and SW225-XX-CSA-010

4-19. In naval ordnance, it is necessary to have a reference direction from which to measure angles. What is the most frequently used reference direction?

1. A fore-and-aft line pointing in the direction of the ship's stern
2. A fore-and-aft line pointing in the direction of the ship's bow
3. A port-and-starboard line perpendicular to the reference plane
4. A port-and-starboard line parallel to the reference plane

4-20. In what report aboard ship would you find the alignment data for the gun mounts and missile launchers?

1. Ship armament installation list
2. Master ordnance configuration file
3. Combat systems smooth log
4. SECAS ordnance list

4-21. Before any alignment work is undertaken afloat, you should first perform which of the following checks?

1. DSOT
2. OCSOT
3. Parallelism
4. Transmission

4-22. Firing cutout mechanisms are designed to interfere with the free movement of the gun mount or launcher.

1. True
2. False

4-23. What activity provides firinq cutout data and cutout cams for the gun mounts on a specific ship?

1. MOTU
2. NAVSEACEN
3. NSWC
4. TYCOM

4-24. Firing cutout cams and limit-stop cams should be checked periodically and reset only if they are not within how many degrees of actual mount settings?

1. +/-1°
2. +/-5°
3. +/-10°
4. +/-15°

4-25. When aligning combat systems equipment in automatic control for antiaircraft operations, you should use air targets having an elevation angle near how many degrees?

1. 25°
2. 45°
3. 90°
4. 120°

4-26. The primary objective of preventive maintenance is to provide what action?

1. Standardized procedures for corrective maintenance
2. Major repair procedures to ensure maximum equipment operation
3. Regular lubrication, inspection, and cleaning of equipment
4. Parts for equipment repair

4-27. What PMS documentation provides a step-by-step guide for performing a specific maintenance action?

1. EGL
2. LOEP
3. MIP
4. MRC

4-28. In addition to preventive maintenance, you should be intimately familiar with which of the following programs or publications?

1. MDs
2. NAVMAT
3. MSOD data bank
4. System maintenance manuals

4-29. The Department Head is responsible for preparing which of the following maintenance schedules?

1. Weekly
2. Monthly
3. Cycle
4. Quarterly

4-30. Procedures for preparation of PMS schedules are described in which of the following publications?

1. MIL-P-24534
2. NAVSEAINST 4570.1
3. OPNAVINST 3120.32
4. OPNAVINST 4790.4

4-31. During a ship's regular overhaul (ROH), what document defines and authorizes work to be done?

1. IMMS
2. PMP
3. SARP/IWP
4. 4790.2K

4-32. What document must be submitted by the Type Commander approximately 12 months in advance of a ship's ROH?

1. CSMP
2. IMA
3. IMAVS
4. SPCC

4-33. Work discovered during a POT&I and designated for IMA accomplishment should be documented on what OPNAV Form?

1. 4790/2K
2. 4790/2L
3. 4790/2Q
4. 4790/7B

4-34. Which of the following is NOT a commanding officer's responsibility in advance planning for a ship's overhaul?

1. Work of ship's force
2. Training of ship's personnel during overhaul
3. Security of the ship's spaces
4. The home port of the ship

4-35. Which of the following is the greatest continuous hazard to ship's undergoing overhaul?

1. Fire
2. Flooding
3. Sabotage
4. Theft

4-36. Instead of regular overhauls, what maintenance program uses depot level maintenance performed onboard ship?

1. CMP
2. IEM
3. PMP
4. SOAP

4-37. Which of the following manuals provide information on ILO PMS procedures?

1. NAVSEA OP 3000
2. SL105-AA-PRO-040
3. SW394-AF-MMO-050
4. SW810-AG-MMI-010

4-38. When the new quarterly schedule for a ROH is made out, what indication is used to show equipment that the contractors are responsible for?

1. Red-colored vertical lines
2. MIP scheduled in green
3. A "YD" with an arrow-tipped line on the MIP line
4. A II or III by the equipment status code

4-39. A W-2(M) written on a quarterly schedule during ROH specifies which of the following maintenance requirements?

1. Accomplish twice weekly
2. Accomplish twice monthly
3. Accomplish weekly
4. Accomplish monthly

4-40. Viscosity is expressed in what units?

1. S.S.U.
2. S.A.E.
3. T.A.B.
4. V.I.

4-41. Information on the MIL specifications for 17111 transmission fluid is found in what publication?

1. NAVSEA OD 3000
2. NAVSEA OP 4
3. NAVWEPS OP 3000
4. SL105-AA-PRO-040

4-42. Many oils used by the Navy are identified by a four-digit number followed by the letters MS. What class of oil is indicated by the number 2135MS?

1. Class 1
2. Class 2
3. Class 3
4. Class 5

4-43. After usinq a substitute lubricant, what procedure should be accomplished when you receive the prescribed lubricant?

1. Wait until the first ROH to remove the substitute lubricant
2. It is not necessary to remove the substitute lubricant
3. Remove the substitute as soon as the prescribed lubricant is available
4. Contact a MOTU technician

4-44. Detailed information for the removal of preservatives from ordnance equipment is contained in what publication?

1. OP 3565
2. OP 3347
3. OD 3000
4. OP 1208

4-45. What is the purpose of the projectile seating gauge (PSD) used in all 5"/54 gun barrels?

1. To estimate the velocity losses
2. To locate a constriction
3. To keep dirt and salt water out of the barrel
4. To check gun mount alignment

4-46. What ordnance publication lists current Army field manuals and technical manuals used by the Navy?

1. OP 0
2. OP 5
3. OP 3851
4. OP 4545

4-47. Which of the following documents identifies material discrepancy trends for your equipment?

1. CAIMS
2. CDBF
3. CSMP
4. OPNAV 4790/2K

4-48. OPNAV 5070/11 is used for what purpose aboard ship?

1. To request technical manuals
2. To review configuration of and field changes in technical manuals
3. To maintain a master inventory of technical library publications
4. To maintain a test equipment inventory

4-49. What reference provides a list of technical manuals that apply to your ship or shore station?

1. NAVSUP 2002
2. PAL
3. TMINS
4. TMMP

4-50. Which of the following is NOT a system test for a Combat Systems Readiness Review?

1. Surface missile and gun mounts
2. Damage control
3. Electronic warfare
4. NTDS

4-51. Detailed guidelines for procedures used with a CSRR are obtained from which of the following instructions?

1. AOINST 5213.2
2. COMNAVSURFLANTINST 9093.1
3. NAVSEAINST 5214.1
4. OPNAVINST 5214.1

4-52. In CASREP reporting, a "casualty" is defined as an equipment malfunction that cannot be corrected within what amount of time?

1. 12 hours
2. 24 hours
3. 48 hours
4. 72 hours

4-53. In a initial CASREP message, what information is required in the RMkS set if outside assistance is requested?

1. Inadequate preventive maintenance on affected equipment
2. Changes reported in error
3. The report of a corrected casualty
4. Scheduling information for a full 30-day period

4-54. What publication provides specific guidelines for CASREP reporting?

1. NAVEDTRA 43100-5
2. NWP-10-1-10
3. OPNAVINST C3501.66
4. OPNAVINST 5520.1

4-55. A deficiency exists in mission essential equipment which causes a major degradation but not the loss of a primary mission. This deficiency is classified as what type of casualty?

1. Category 1
2. Category 2
3. Category 3
4. Category 4

4-56. Which of the following files contains the data elements required for the worldwide management of the Navy's expendable conventional ammunition?

1. CAIMS
2. CSMP
3. NRS
4. SPCC

4-57. Ordnance management cognizant symbol 8T identifies what type of non-nuclear ammunition?

1. Air launched guided missiles
2. SUBROC
3. Sonobuoys
4. Surface launched guided missiles

4-58. What instruction provides policy, procedural, and responsibility guidelines for supply management of conventional ordnance?

1. CINCLANTFLTINST 8010.4
2. COMNAVLOGPACINST 8015.1
3. OPNAVINST 5214.1C
4. SPCCINST P8010.12

4-59. What report should be submitted for any action that affects the on-hand quantity of conventional ammunition?

1. Ammunition transaction report
2. NAVGRAM
3. NAVSUP 1250
4. NAVSUP 1348

4-60. Insofar as possible, ATRs must be submitted within what total number of hours following an ammunition transaction?

1. 12
2. 24
3. 48
4. 72

4-61. An ATR message report consists of seven paragraph. What information is provided in paragraph 6?

1. Report serial number
2. UIC of the reporting activity
3. Quantity of material involved in the transaction
4. Explanatory data

4-62. Serial/lot item tracking is required for what type of ordnance?

1. Air/surface launch missiles and boosters
2. Demolition charges
3. Projectiles
4. Small-arms ammunition

4-63. An oscilloscope is classified as what type of test equipment?

1. Electrical
2. Mechanical
3. General-purpose electronic
4. Special-purpose electronic

4-64. What agency is responsible for the technical coordination of the Navy calibration program?

1. Field Calibration Activity
2. Field Calibration Laboratory
3. National Bureau of Standards
4. Metrology Engineering Center

4-65. The MEASURE program is an automated data processing system designed to provide

1. procedures and intervals for all laboratory standards and test/measuring equipment
2. a standardized system for recalling and scheduling test equipment into calibration facilities
3. information for command training programs
4. a training syllabus for special equipment

4-66. Many MEASURE formats are forwarded automatically by MOCC or CDBF. Which of the following formats is distributed monthly?

1. Format 215 unmatched listing
2. Format 310 test equipment inventory
3. Format 802 blank METER cards
4. Format 802 replenishment preprinted METER cards

4-67. What publication is commonly called the "MEASURE User's Manual"?

1. OPNAV 43P6A
2. OPNAVINST 3120.32
3. NAVSEAINST 8020.4
4. NAVSUP 2000

4-68. What calibration label is used for equipment that requires in-place calibration?

1. CALIBRATED
2. CALIBRATED-REFER TO REPORT
3. INACTIVE
4. SPECIAL CALIBRATION

4-69. What calibration label is used for equipment that requires calibration before, during, and after each use?

1. CALIBRATED
2. CALIBRATED-REFER TO REPORT
3. CALIBRATION NOT REQUIRED
4. USER CALIBRATION

4-70. For test/measuring instrument shown as NCR on the Metrology Requirement List, what type of calibration label is required?

1. CALIBRATION NOT REQUIRED
2. CALIBRATION VOID IF SEAL BROKEN
3. INACTIVE
4. REJECTED

4-71. Which of the following instructions is the controlling guide for safeguarding classified information?

1. OPNAVINST 5510.1
2. OPNAVINST 5214.1
3. NAVSEAINST 8810.3
4. NAVSEAINST 8810.2

4-72. What type of informal training is used to make personnel aware of routine knowledge and skills used daily within the Navy environment?

1. Assist visits
2. GNT
3. OJT
4. PQS

4-73. What is the governing publication for implementing the Planning Board for Training programs?

1. BUPERINST 2100.5
2. NAVEDTRA 43100-5
3. NAVSEAINST 8020.4
4. OPNAVINST 3120.32

4-74. When establishing a shipboard training plan, you must take into account the ship's schedule and any shipboard evolutions.

1. True
2. false

4-75. Which of the following forms is required to be maintained as part of the Division Officer's notebook?

1. OPNAV Form 3120/2
2. OPNAV Form 3120/1A
3. OPNAV Form 1500-31
4. NAVPERS 1070/6