THE TIME MOTOR REGULATOR

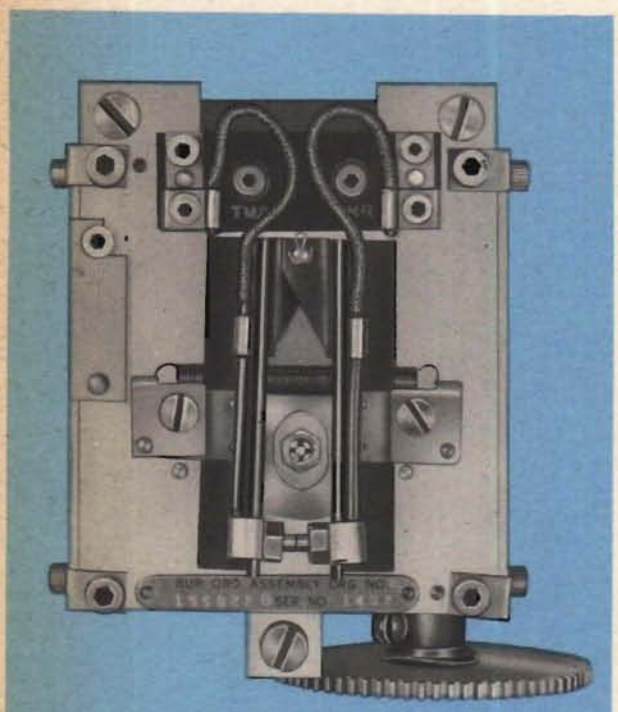

TIME MOTOR REGULATOR

The time motor regulator keeps the time motor running at a constant average speed and independent of variations in the load.

Maintenance and repair are the same for all time motor regulators using clockwork, even though they may vary slightly in design.

The time motor regulator contains five subassemblies: an escapement mechanism, a jewel differential, a friction relief, a worm shaft assembly, and a contact arm assembly.

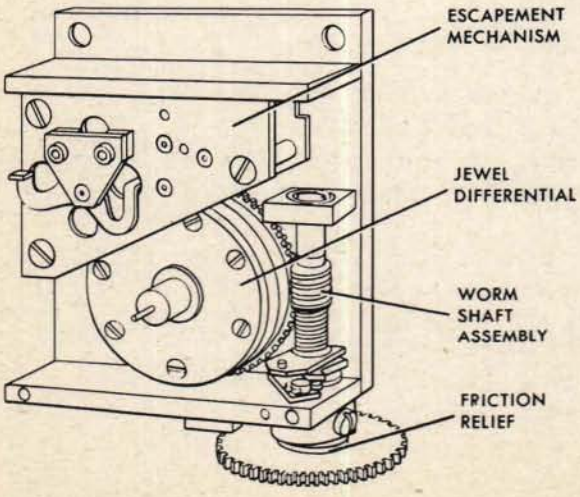

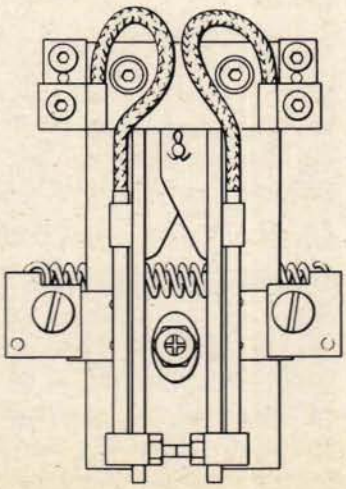

CONTACT ARM ASSEMBLY

Typical symptoms

A time motor regulator test may indicate faulty operation due to stalling or erratic timing. These symptoms may be traced to various causes in one or more of the sub-assemblies.

Locating the cause

Some of the causes can be located only while the regulator is in the instrument with the time motor in operation. These are given special mention in the discussion of each sub-assembly.

Escapement mechanism

Stalling

The time motor regulator may stall because of jamming or sticking in the escapement mechanism.

Jamming may be caused by dirty or damaged jewel bearings or gears, a bent staff, or insufficient end play in the staff.

A time motor regulator which stalls periodically may be said to be sticking if it can be restarted by hand cranking. With the escapement inoperative, hand cranking causes the cam to rotate. When the high points of the cam pass the contact-arm rollers, the torque acting on the escapement reverses, thereby releasing the sticking parts.

Sticking may be due to dirt or burrs on one of the escapement parts. Faulty reassembly may result in incorrect angular relationship between the pallet and verge, or incorrect clearance between the pallet fork and balance staff or between the verge and the escape wheel. These defects may also be the cause of sticking.

Erratic timing

Erratic timing of the time motor regulator may be due to any of the causes of stalling.

Erratic timing may also be caused by bent stop pins which will prevent correct movement of the pallet fork, or a loose collet which will upset the alignment of the impulse pin with the balance and pallet staffs.

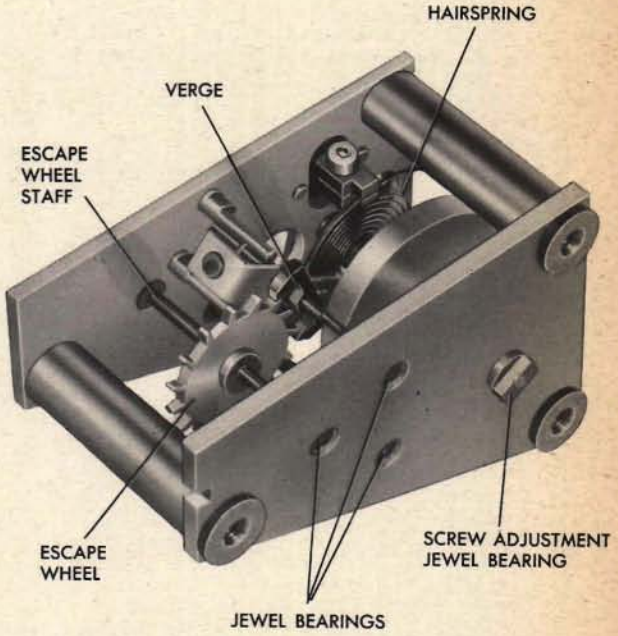

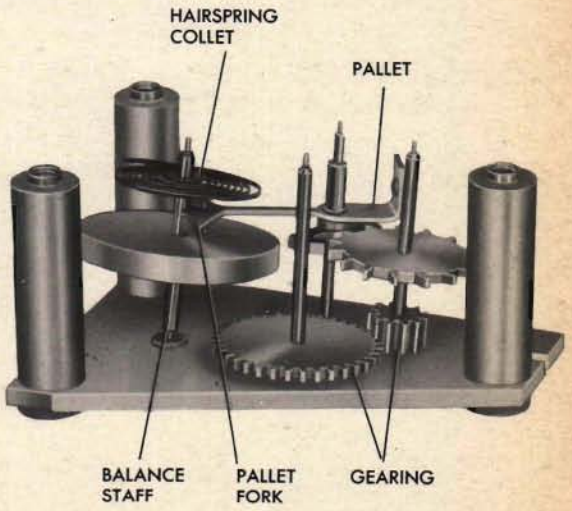

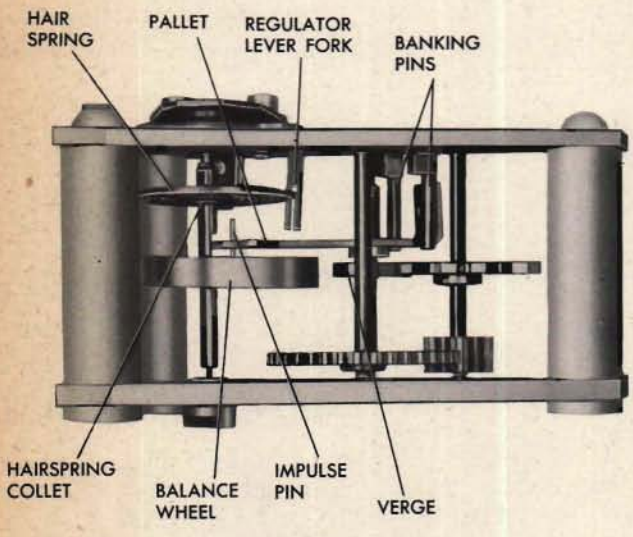

Erratic timing (continued)

Erratic timing of the time motor regulator may be due to any of the causes of stalling. It may also be due to any of the following causes:

Bent or improperly adjusted banking pins which will prevent correct movement of the pallet and verge.

A loose or improperly adjusted hairspring collet which causes unequal swing of the impulse pin to either side of the pallet fork.

An out-of-shape hairspring, the coils of which strike each other or parts of the escapement other than the fork on the regulator lever.

A tight or bent regulator lever fork which causes inconsistent effects when an attempt is made to adjust the timing.

A bent staff which throws the balance wheel or pallet off poise.

Improper alignment between the impulse pin and the recess in the balance staff.

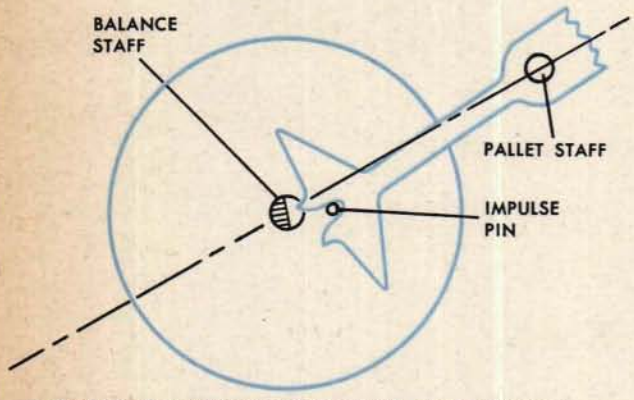

INCORRECT HAIRSPRING COLLET ADJUSTMENT
(BALANCE WHEEL AT REST)

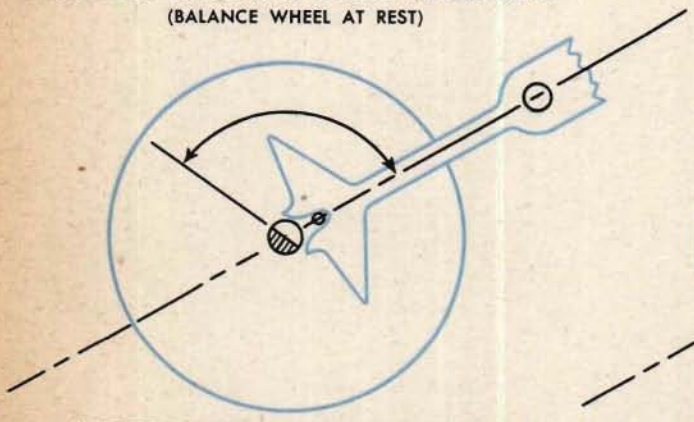

INCORRECT IMPULSE PIN ALIGNMENT

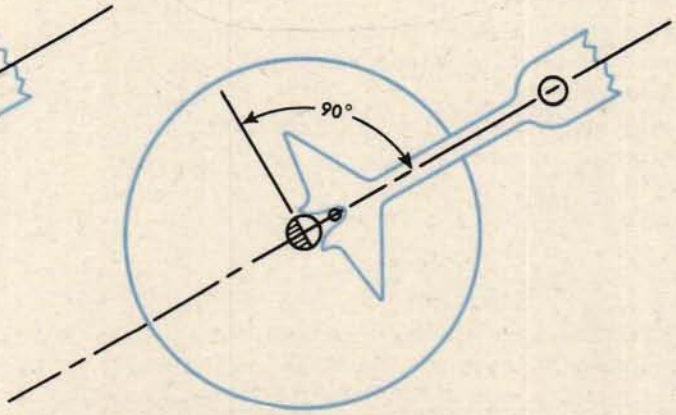

CORRECT ALIGNMENT

Contact assembly

Stalling

Stalling of the time motor regulator may be caused by electrical trouble, or by jamming or sticking in the contact assembly.

Electrical trouble can be detected only while the regulator is installed in the instrument. It may be caused by a burned-out or broken pigtail, or by dirty or damaged contacts. If the regulator starts when the contacts are together, the trouble is not electrical.

Jamming or sticking may be caused by dirty or damaged rollers. This can be detected by turning the rollers with the fingers.

Jamming or sticking may also be caused by a bent hinge or a dirty or damaged pivot pin. These causes are present if the arms do not move freely when the mainspring is removed.

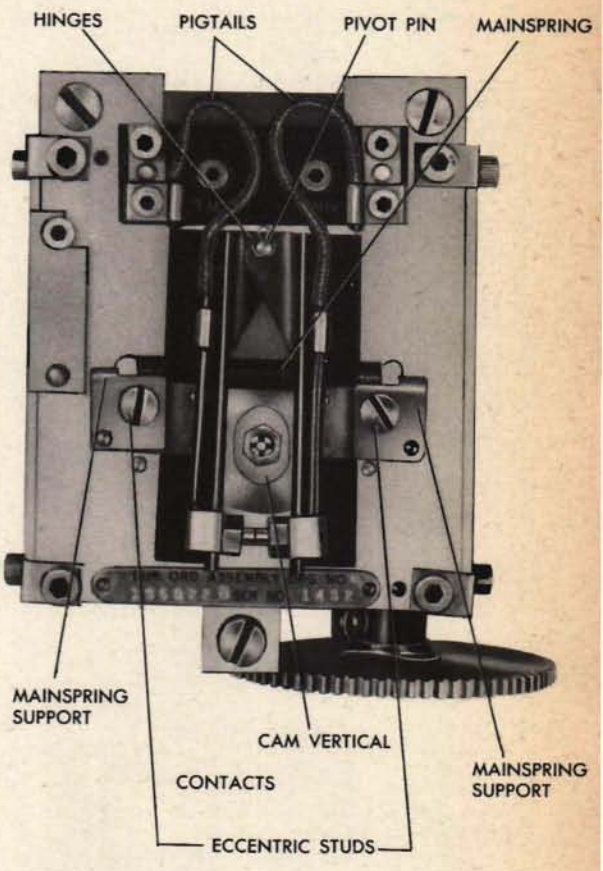

Erratic timing

Erratic timing may be due to any of the causes of stalling, or it may be due to incorrect mainspring tension adjustment or improper contact adjustment.

If the eccentric studs on the mainspring supports have slipped or are improperly positioned, the wrong amount of torque will be applied to the escapement. The escapement input will also be affected if the contacts are not adjusted to open when the cam is at the angle specified on the assembly drawing.

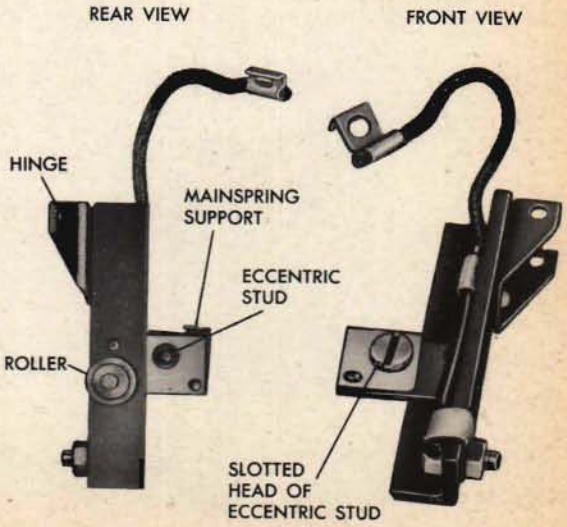

Worm shaft assembly

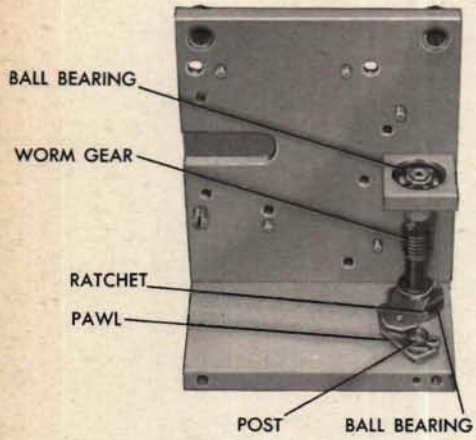

Stalling

Stalling of the time motor regulator may be caused by jamming, sticking. or slipping in the worm shaft assembly.

Jamming or sticking may be caused by dirty or damaged ball bearings or gears, or a bent shaft which will cause a tight mesh between the worm and the jewel differential.

Slipping may be the cause of stalling if the taper pin which secures the worm to the shaft has fallen out.

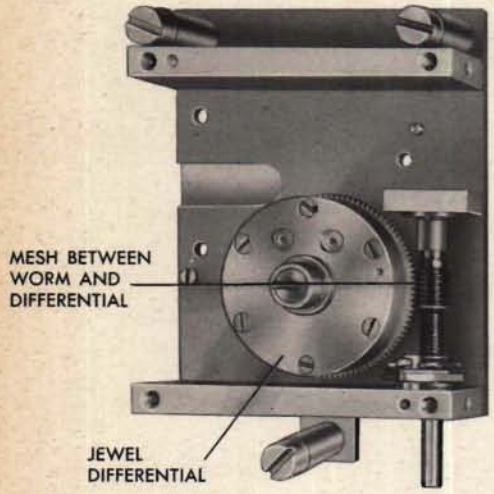

Erratic timing

Erratic timing may be due to any of the causes of stalling in the worm shaft assembly.

Erratic timing may be due to intermittent slipping of the friction relief caused by binding in the worm shaft assembly. Insufficient end play, defective bearings, or a tight worm mesh may be the cause of this binding which overloads the friction relief.

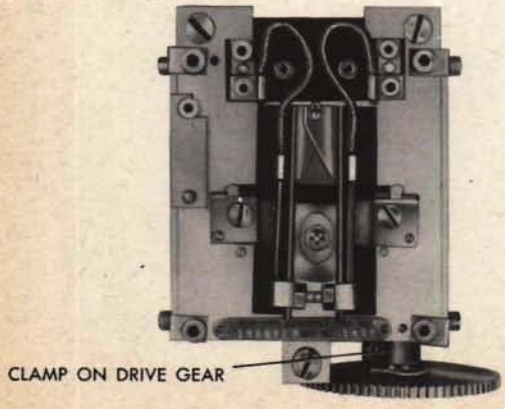

Friction relief

Stalling or erratic timing of the time motor regulator may be caused by a loose clamp on the drive gear which will cause the gear to slip on the worm shaft instead of turning it.

Jewel differential

Stalling

Stalling of the time motor regulator may be caused by jamming or sticking in the jewel differential.

Jamming or sticking may be caused by dirty or damaged bearings, gears, or cam, or by a bent shaft.

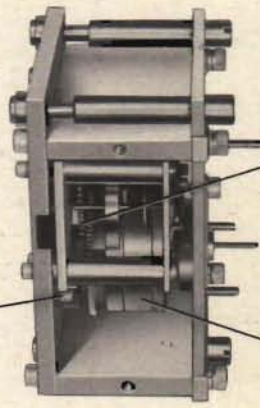

Erratic timing

Erratic timing may be due to any of the causes of stalling or to slipping in the jewel differential.

Slipping may be caused by a loose cam nut on the front external shaft or a loose clamp on the rear external shaft.

For repairing the jewel differential, see page 182.

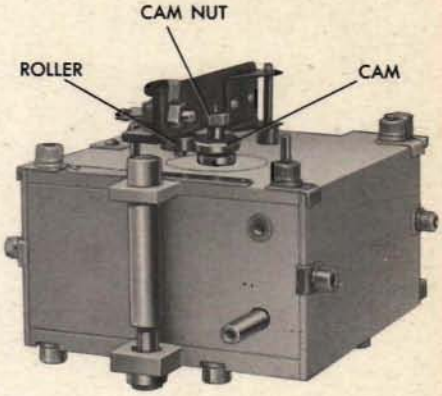

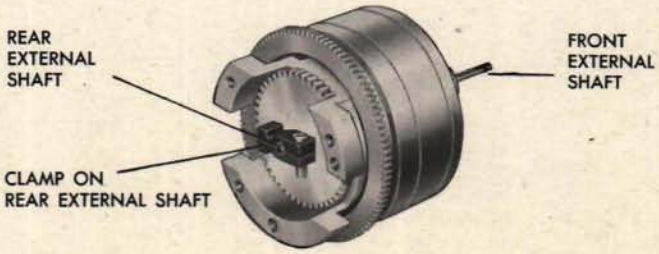

Disassembling the unit

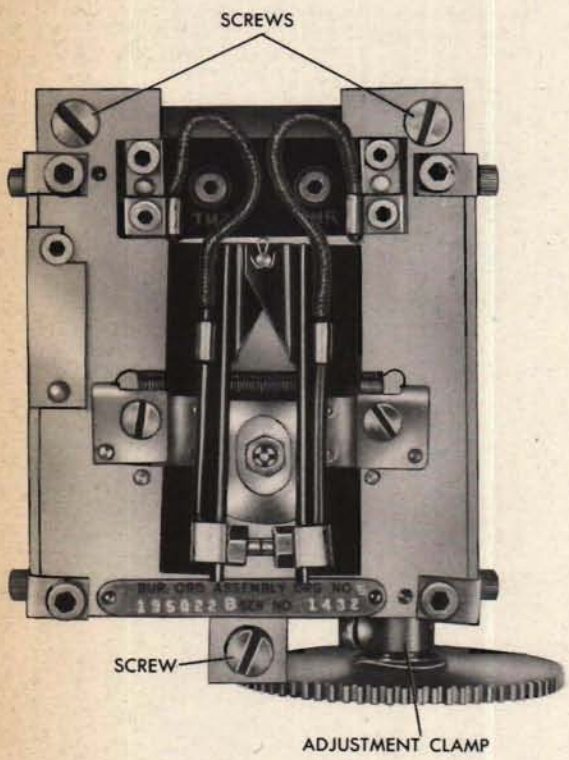

Complete disassembly of the time motor regulator is not necessary for most repairs. If it is necessary, use the assembly drawing as a guide.

The escapement mechanism and the jewel differential are delicate instruments and should always be handled with extreme care.

Repairs should be made only with the regulator removed from the instrument. It can be taken out easily by unscrewing the three long screws. Then disassemble those subassemblies that require repair.

Disassembling the friction relief

1 Loosen the adjustment clamp and take off the friction relief.

2 To disassemble the friction, screw off the adjustment clamp and separate the parts.

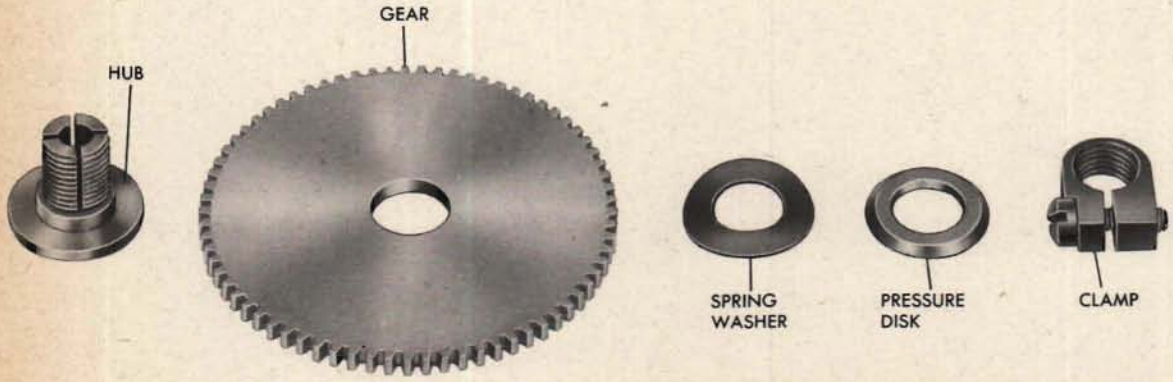

PARTS OF THE FRICTION RELIEF

Disassembling the contact arm assembly

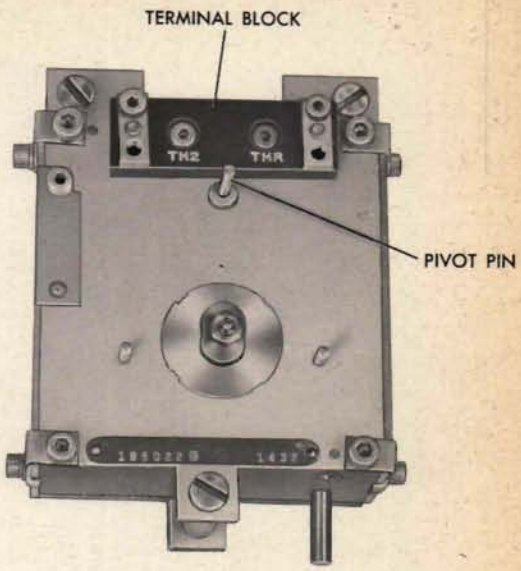

1 Disconnect the pigtails at the terminal block.
2 Remove the mainspring.
3 Remove the cotter pin from the pivot pin.
4 Lift off both contact arms.
5 Remove the terminal block from the case.

THE CAM is actually a part of the jewel differential, but it should be disassembled with the contact arm assembly.

1 Remove the cam nut. Protect the cam with a wrapping of heavy cardboard or leather and grip it with a pair of pliers while removing the nut. Be extremely careful to avoid bending the shaft.

2 Remove the cam from the shaft.

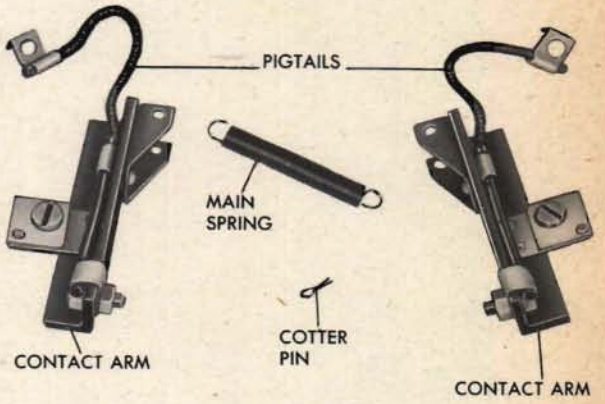

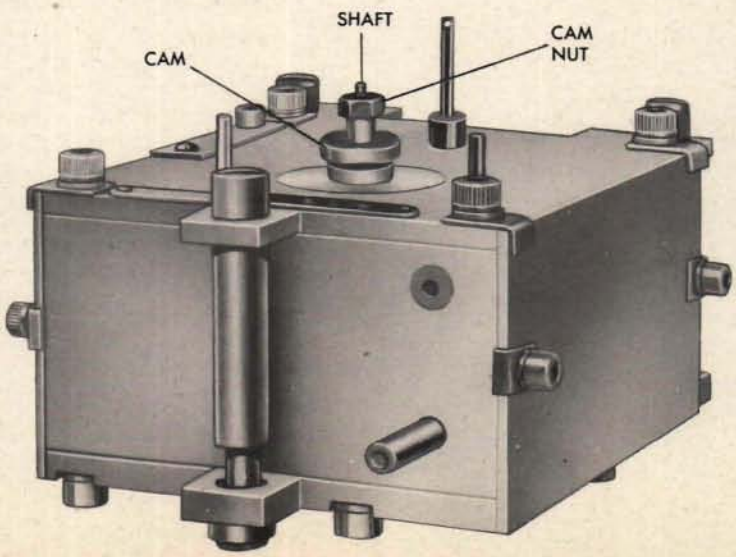

Disassembling the escapement mechanism

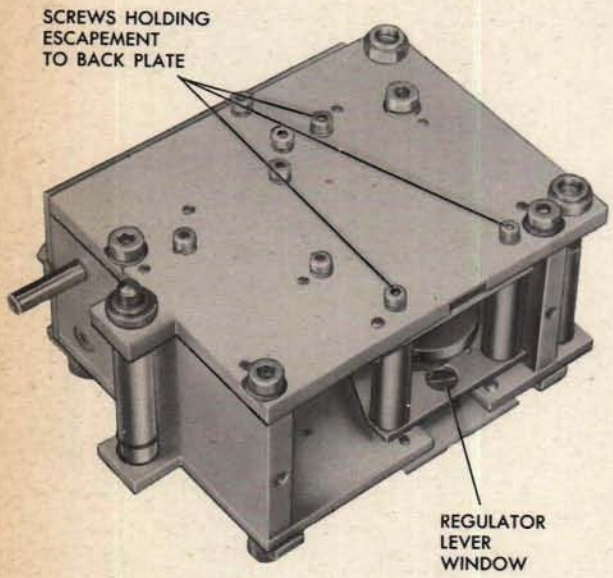

1 Remove the side plate near the regulator lever window.

2 Take out the three small screws holding the escapement mechanism to the back plate.

3 Remove the escapement mechanism from the case.

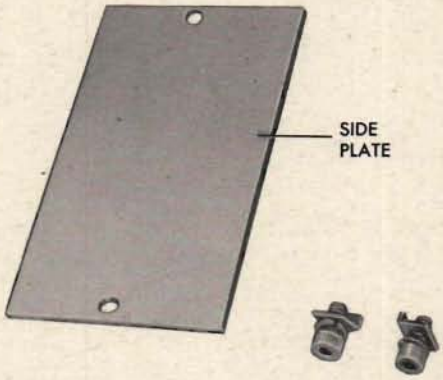

4 Loosen the hairspring anchor clamp. Let the hairspring slip out.

5 Take out the three round-head screws. Lift off the top plate with the regulator lever. Be careful not to damage the hairspring.

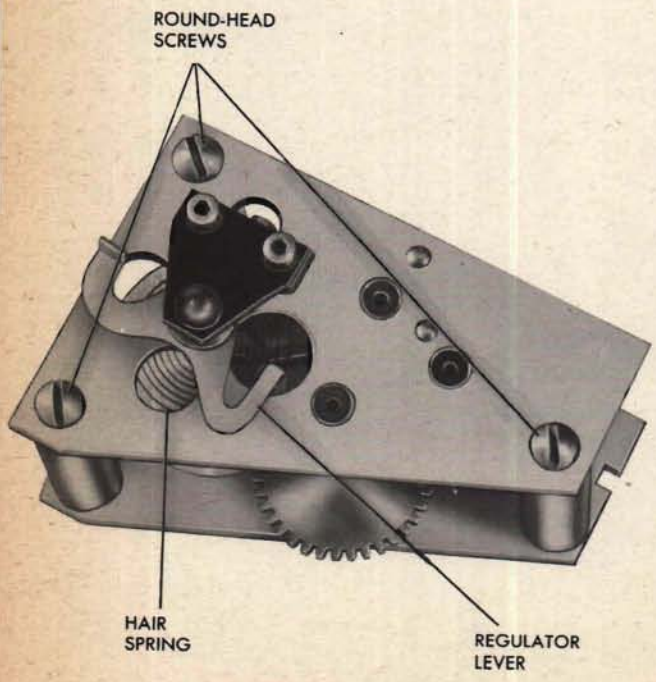

6 Remove the balance staff, input gear staff, escape staff, and pallet staff from the bottom plate.

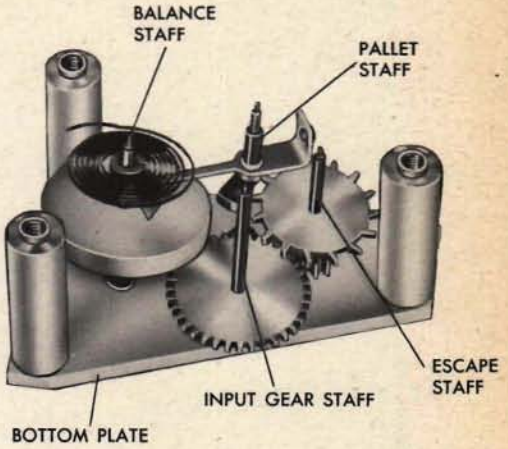

7 To remove the anchor clamp, regulator lever, cup washer, and balance-staff upper bearing, unscrew the two screws that hold the anchor clamp and retainer.

8 To remove the jewel bearings, use a round flat-faced punch that is slightly smaller in diameter than the jewel-bearing mounting hole. Tap the punch lightly, being sure to hold it perpendicular to the plate.

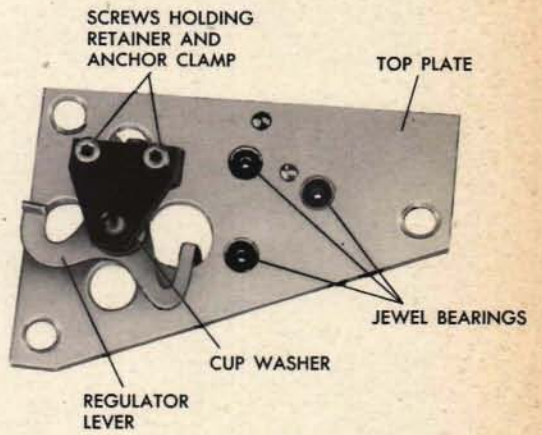

Removing the jewel differential

1 Remove the other side plate from the regulator.

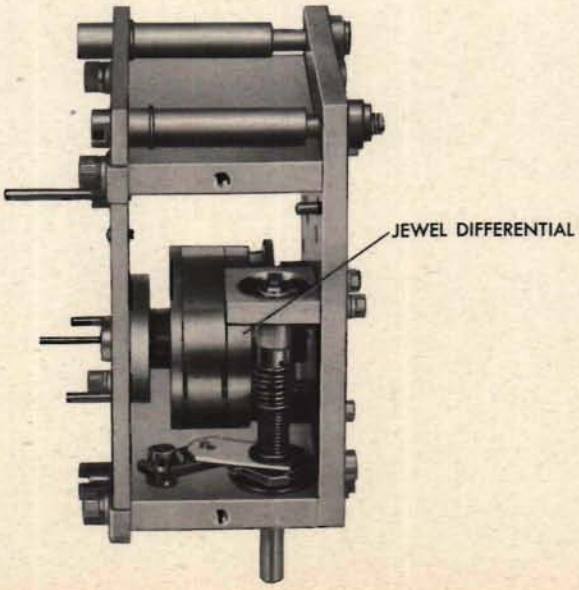

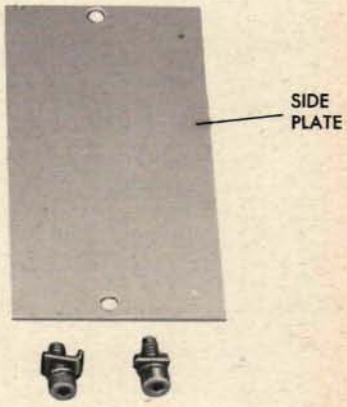

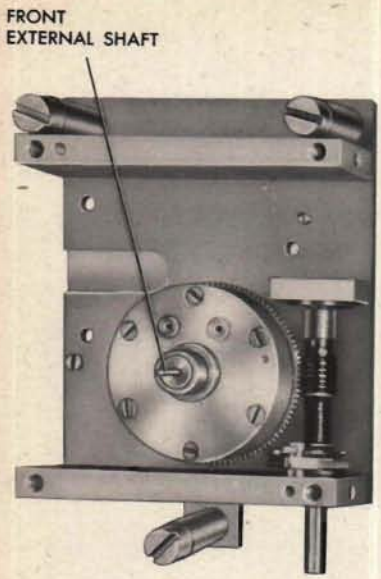

2 Remove the front plate. Be careful not to damage the front external shaft of the differential.

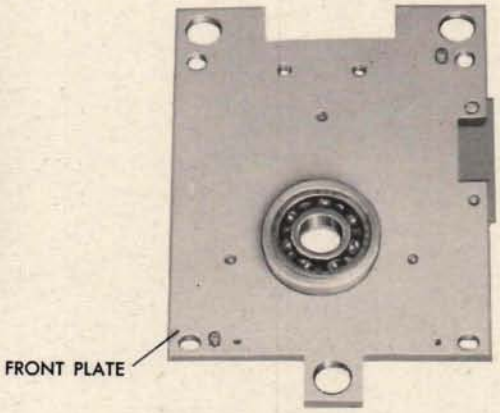

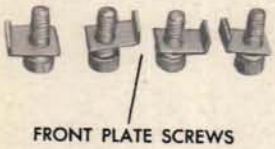

3 Remove the spacer from the differential and tag it.

4 Remove the three screws holding the differential to the back plate.

5 Lift out the jewel differential. For disassembly of the jewel differential, refer to the chapter on that unit, page 182.

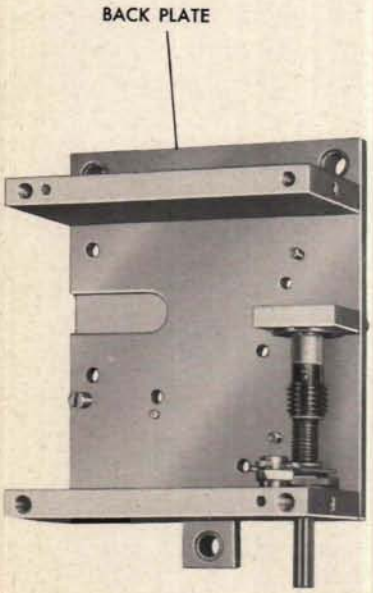

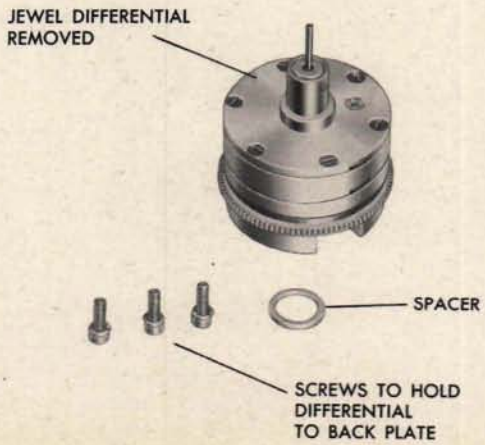

Disassembling the worm shaft assembly

1 Remove the two screws from the worm shaft hanger. Take off the hanger.

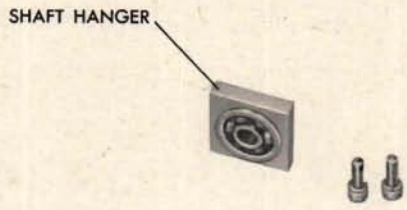

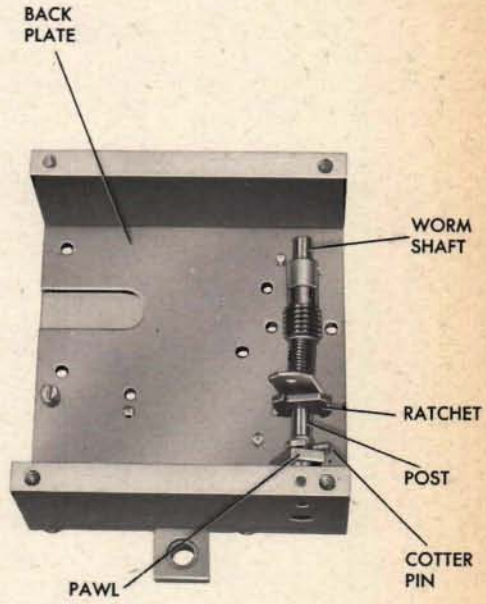

2 Unscrew and remove the top plate. Lift out the worm shaft and ratchet. Separate the ratchet from the shaft. Tag the spacer.

3 Take the cotter pin out of the post. Lift off the pawl.

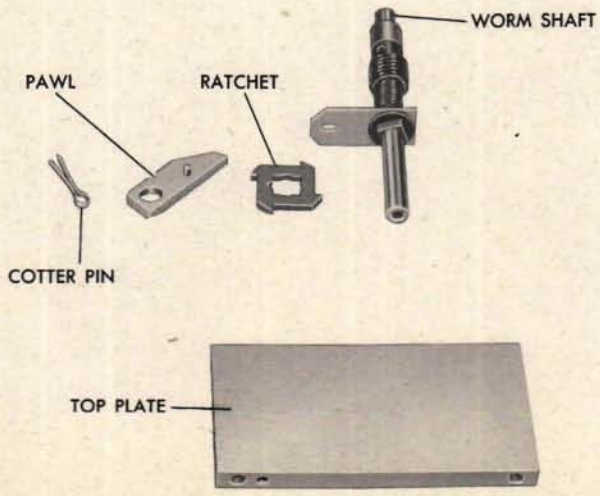

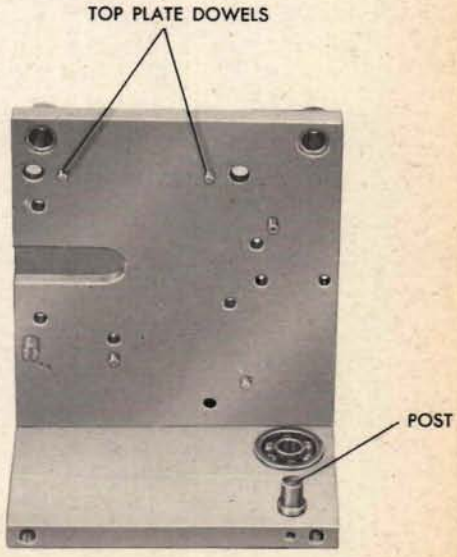

Repairing the parts

A time motor regulator that requires major repairs should be replaced if another one is available.

Always use the assembly drawing as a guide when making any repair.

Use an approved solvent to remove dirt from bearings and gears.

Damaged bearings must be replaced.

Remove burrs from gear teeth with a fine jeweler's file. The escape wheel teeth should be polished.

Remove burrs from pivot pins, spacers, and ends of staffs by polishing.

Straighten bent shafts in accordance with instructions on page 69.

If the feet on the case or the escapement are uneven, polish them until they are even. To detect the high spots, move the case or escapement over a flat plate coated with prussian blue. In polishing the feet, make sure that the distance from the input shaft to the plane of the feet is within the allowable limit according to the assembly drawing.

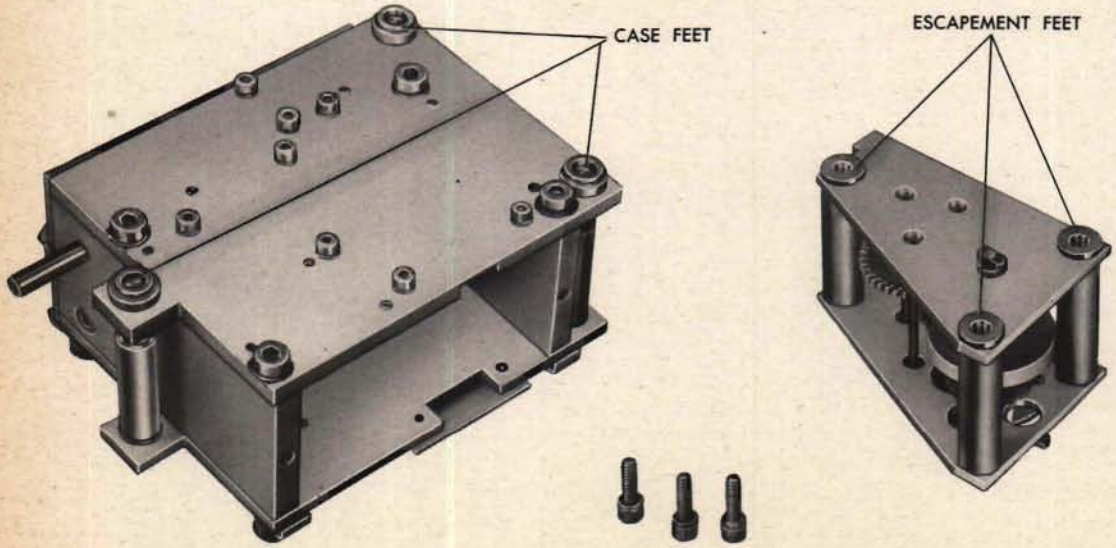

Repairing the contact arm assembly

Rerivet or replace loose mainspring supports. A badly damaged mainspring should be replaced. Be sure to use a spring with the proper number of coils as specified by the assembly drawing.

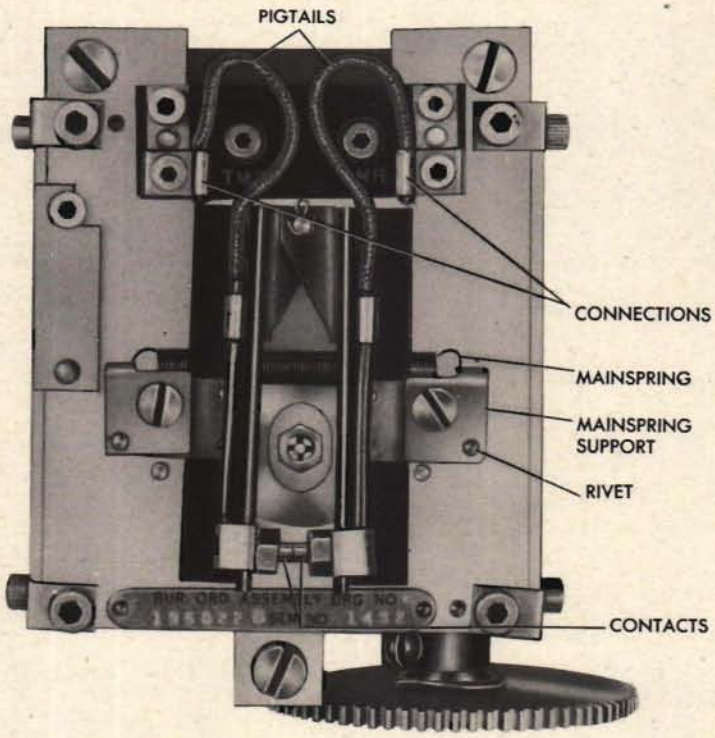

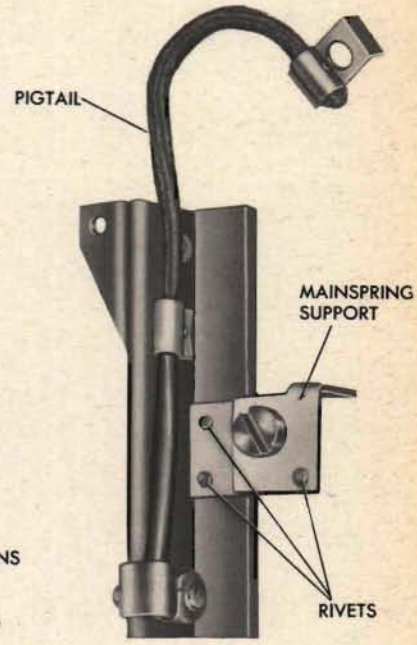

Dirty contacts should be cleaned. Damaged contacts must be replaced.

Refer to the chapter *Wiring* for the method of repairing a burned-out pigtail or a broken connection.

Rerivet a loose adjustable stud. After repair, it must be slip-tight so that the tension of the mainspring can be adjusted.

A bent or damaged hinge causing stiffness in the contact arm joint must be straightened and the holes cleared to insure freedom of movement and correct alignment.

A loose roller stud should be tightened by peening the riveted side. If the roller itself is tight or jammed, it should be removed from the stud for cleaning or replacement.

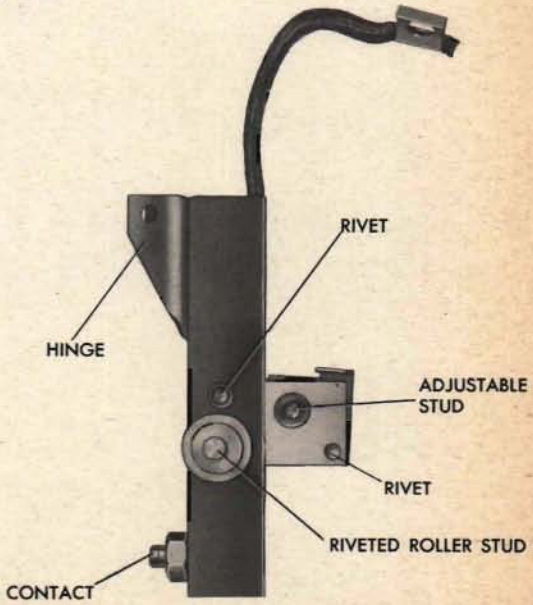

Repairing the worm shaft assembly

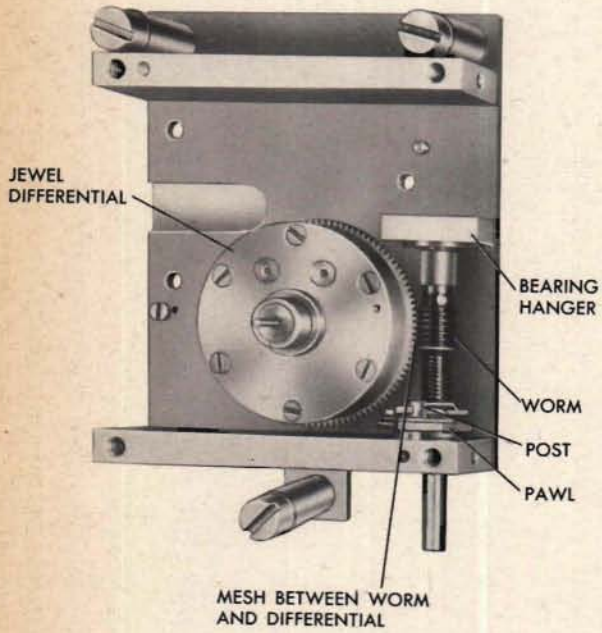

To straighten a bent worm shaft, refer to the instructions for straightening a bent shaft, page 69.

To loosen or tighten the mesh between the worm and differential, move the hanger in accordance with the instructions in *Basic Repair Operations,* page 36.

If the pawl is tight on the post, polish the post to free it.

Repairing the friction relief

If the drive gear is frozen on the hub, polish the bore of the gear.

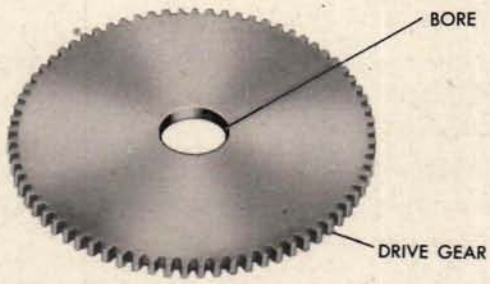

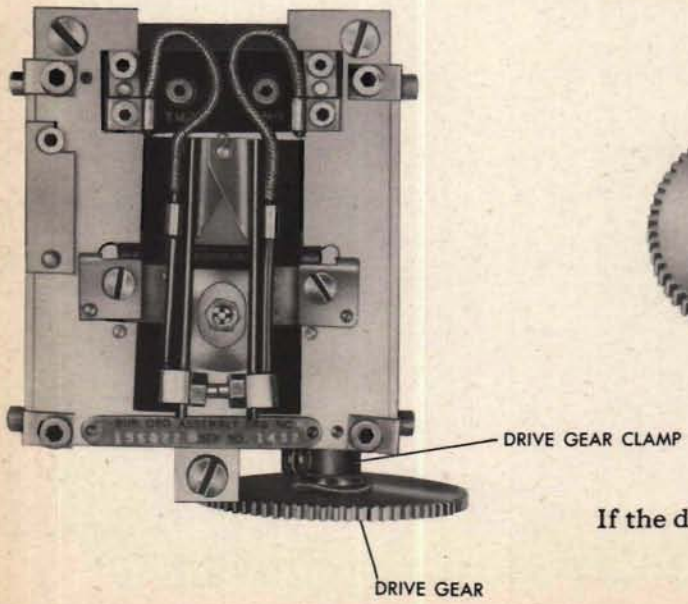

If the drive gear clamp is damaged, replace it.

Repairing the escapement mechanism

If a replacement is not available, repairs should be made as follows:

Any repair to the escapement mechanism must be handled with extreme care, because it is a very delicate piece of equipment.

Remove any burrs from the verge or escape wheel by polishing—not stoning.

If the regulator lever has been swung to the limit of its adjustment and the escapement is still too slow or too fast, the hairspring should be unclamped and shortened or lengthened, respectively. Whenever this is done, the at-rest position of the balance wheel must be reset by slipping the collet so that the balance staff, the impulse pin, and the pallet staff are in line (see page 492).

Do not try to repair a damaged hairspring or tighten a loose verge or collet. The entire escapement mechanism should be replaced.

If the impulse pin is not aligned with the recess in the balance wheel staff, firmly grip the staff and slip the balance wheel.

To adjust the end play of a shaft, gently tap the jewel bearings with a round flat-faced punch.

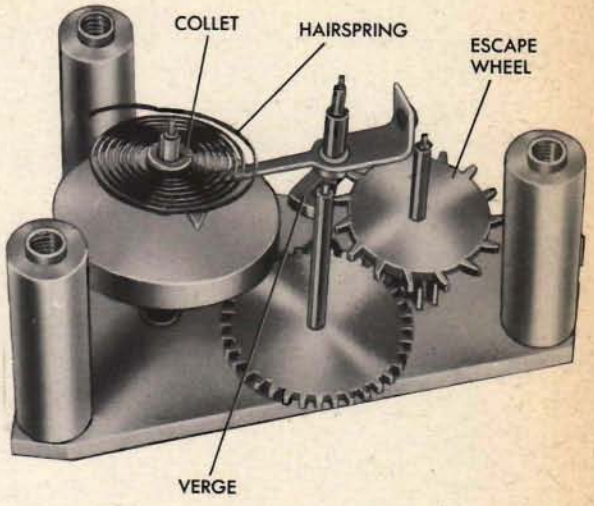

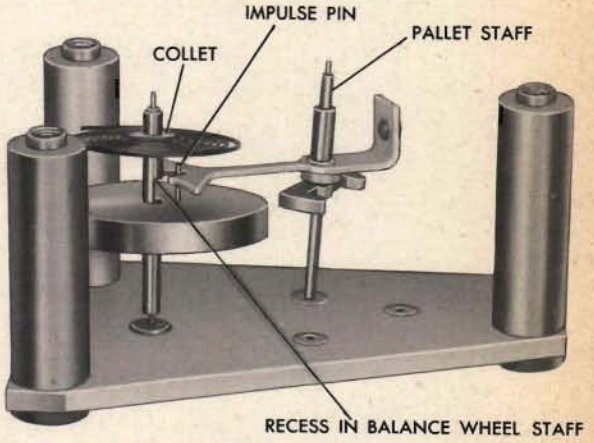

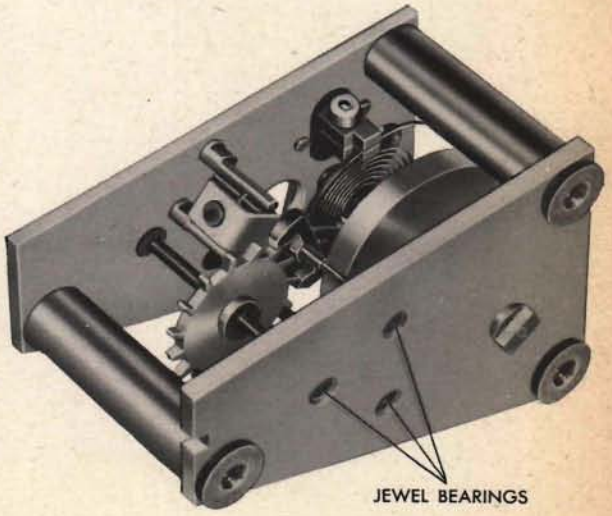

Repairing the jewel differential

For instructions on repairing the jewel differential, refer to page 182.

Reassembling the unit

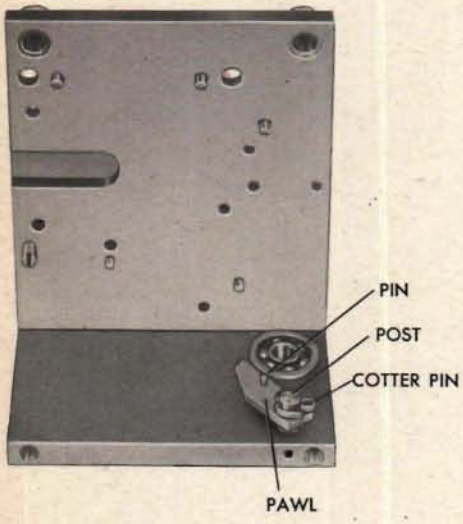

Reassembly of the various units of the time motor regulator should be carried out with the aid of the assembly drawing. The subassemblies should be put together in the following order:

The worm shaft

The jewel differential, with the exception of its cam

The escapement mechanism

The cam on the front external shaft of the differential

The contact arm assembly

The friction relief

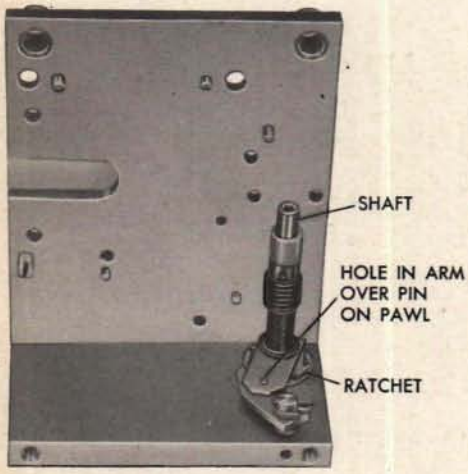

Reassembling the worm shaft

1 Replace the pawl on the post, with the pin on the top. Secure the pawl with the cotter pin.

2 Mount the ratchet on the shaft. With the hole in the arm over the pin on the pawl, put the shaft in the bearing.

3 Mount the hanger, using screws of the correct length. If the screws are too long, they will "bottom" in the hanger. If they are too short, the threads will be stripped.

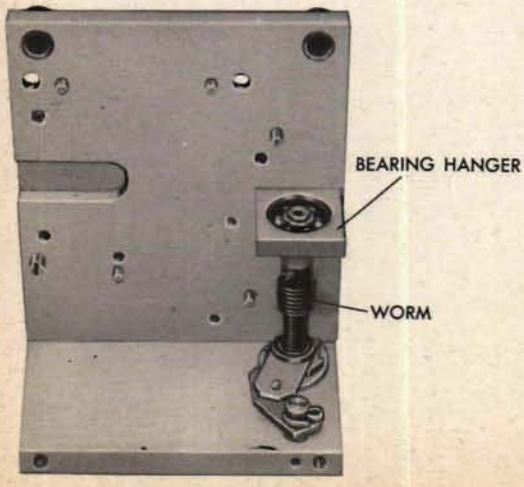

The worm gear mesh is adjusted after the jewel differential is installed.

Installing the jewel differential

1 Put the differential in the case with the cutout section of the adapter facing away from the worm shaft. Fit the adapter on the dowels in the back plate and secure it with the screws.

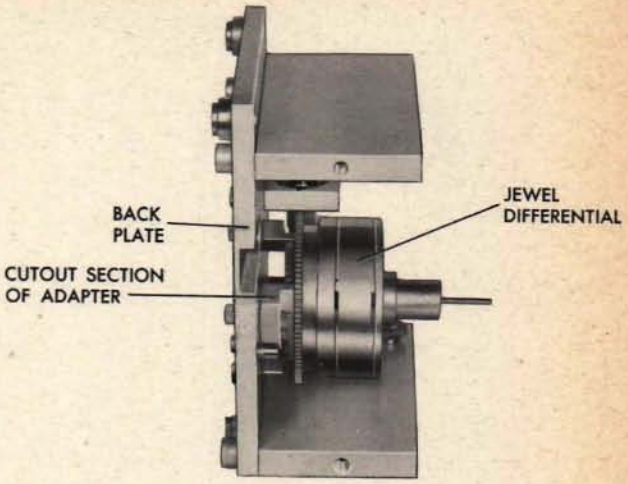

2 Put the three long mounting screws in the case.

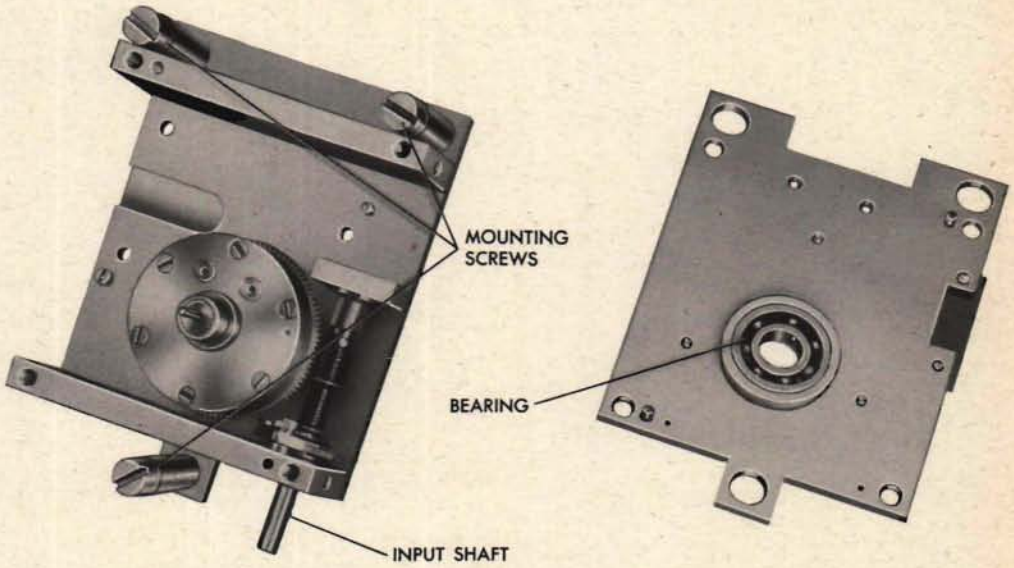

3 Put the spacer over the front trunnion of the differential. Lubricate the bearing in the front plate. Mount the plate on the case.

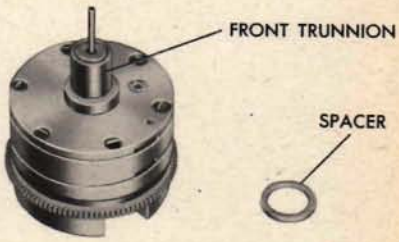

4 Adjust the mesh between the worm and the differential by moving the worm shaft hanger if necessary. Check for freedom of movement by turning the input shaft.

Reassembling the escapement mechanism

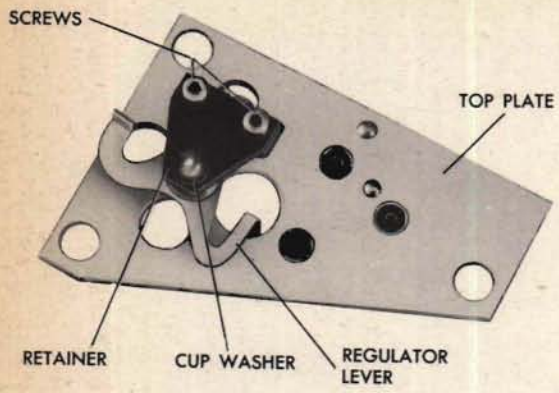

1 Put the regulator lever and cup washer in place on the top plate and insert the balance-staff upper bearing. Put the anchor clamp in place with the clamp screw pointing away from the balance-staff bearing. Add the retainer plate and secure with the two screws.

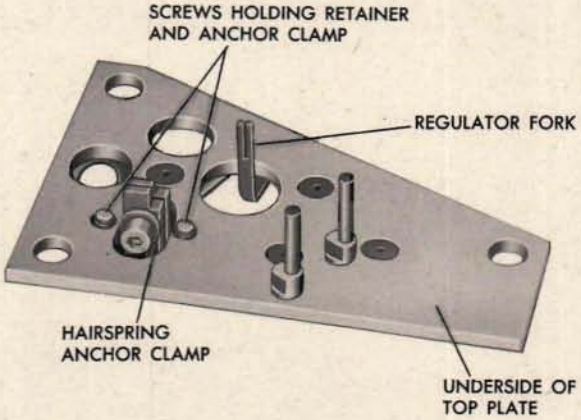

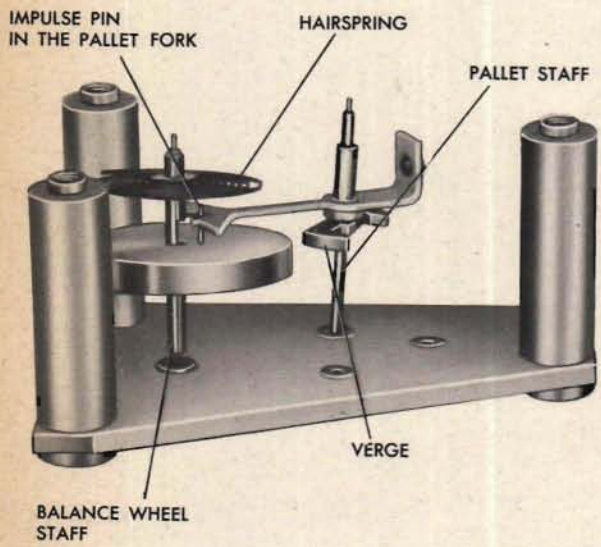

2 With the hairspring up, seat the balance wheel staff in its jewel bearing in the bottom plate. Use tweezers to avoid damaging the hairspring.

3 Seat the verge end of the pallet staff in its jewel bearing in the bottom plate. The impulse pin must be in the pallet fork.

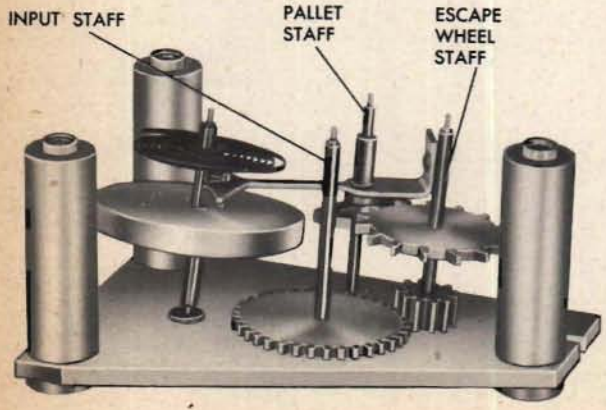

4 Seat the gear end of the escape wheel staff in its jewel bearing in the bottom plate.

5 Seat the gear end of the input staff in its jewel bearing in the bottom plate.

6 Rest the top plate on the posts of the bottom plate. Place the pallet between the stop pins. Place the outer coil of the hairspring between the tines of the regulator fork.

7 Seat the shafts in the jewel bearings of the top plate. Secure the plate by means of the round-head screws that go into the posts.

8 Adjust the end play of the balance wheel staff by turning the screw adjustment jewel bearing.

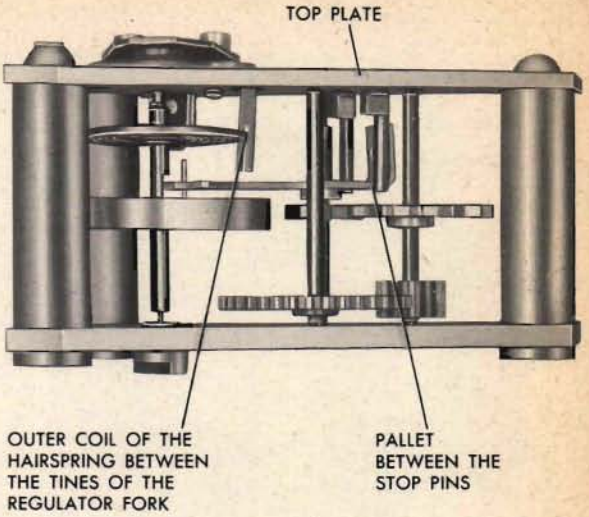

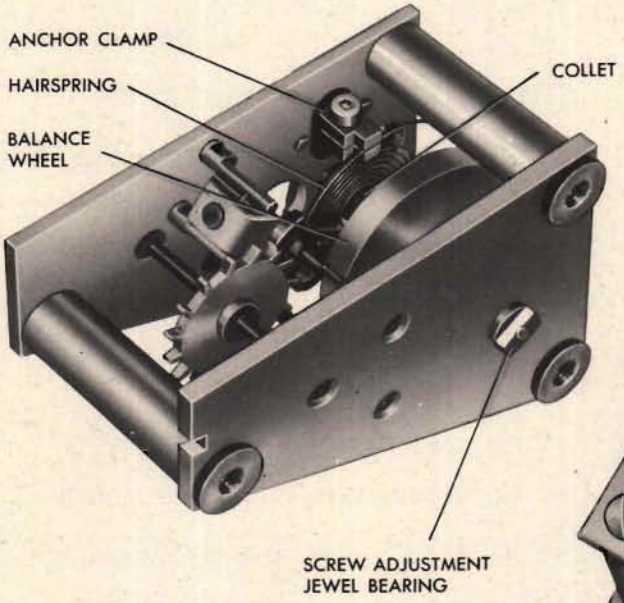

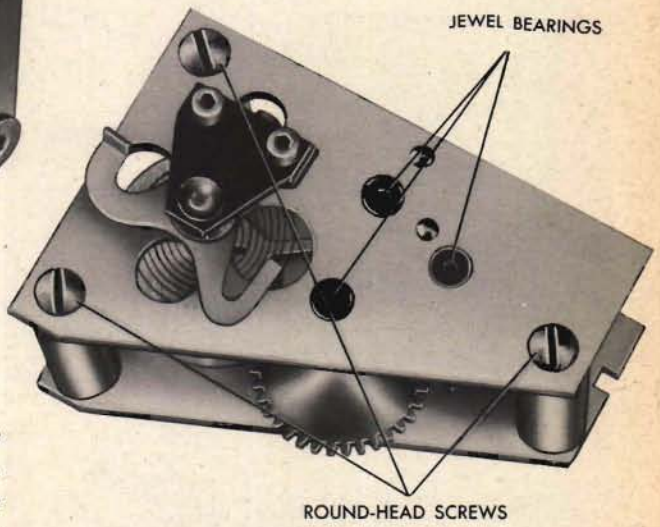

9 Place the end of the hairspring in the anchor clamp and tighten the clamp. Slip the collet to line up the impulse pin. The hairspring may have to be adjusted later to improve the timing.

10 Bench check the escapement mechanism. See page 511.

11 Place the escapement mechanism in the case with the top plate toward the front of the case. Check the mesh between the escapement and the differential. If any adjustment is required, turn the mesh adjusting stud.

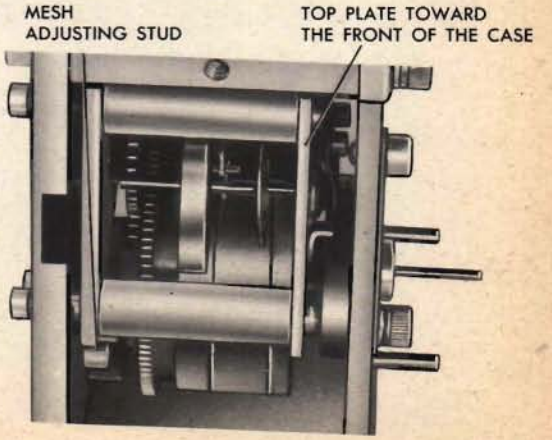

12 Screw the side plates of the case in place.

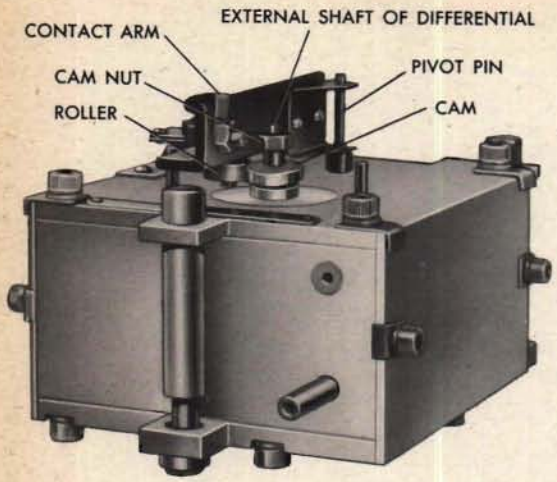

Reassembling the cam

1 Slide the cam onto the front external shaft of the differential.

2 Put one of the contact arms on the pivot pin and adjust the height of the cam to the contact arm roller.

3 Place the cam nut on the cam and tighten it. Be very careful not to bend the shaft.

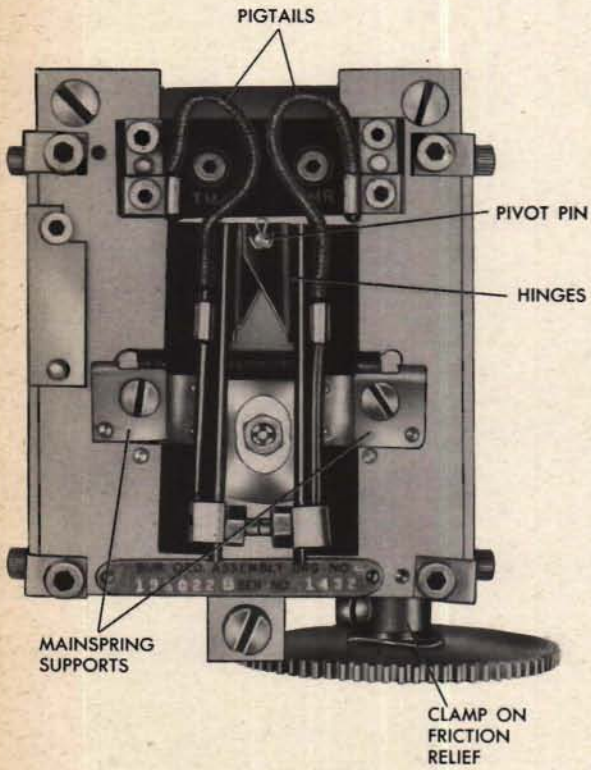

Reassembling the contact arms

1 Screw the terminal block in place with the insulation strip under it.

2 Slide the hinges of the contact arms together and slip the hinges over the pivot pin. Secure the hinges by putting the cotter pin through the pivot pin. Bend the ends of the cotter pin.

3 Slip the ends of the mainspring through the holes in the mainspring supports.

4 Connect the pigtails to the terminal block.

Reassembling the friction relief

1 Assemble the friction relief by slipping the gear over the hub. Put the spring washer over the hub, and the pressure disk on top of the spring washer. Put the clamp on the hub.

2 Slip the hub over the input shaft of the regulator and tighten the clamp.

Bench checking the escapement mechanism

1 The balance wheel staff, the impulse pin, and the pallet staff must be aligned when the escapement is at rest.

2 The banking pins must prevent the verge from bottoming in the escape wheel but should permit 0.01 to 0.02-inch movement of pallet tip against balance staff when the balance staff is rotated to its extreme positions.

3 With the escapement at rest, the regulator fork must not touch the hairspring at any position.

4 The impulse pin must be centered opposite the recess in the balance wheel staff.

5 Spacing between the turns of the hairspring must be uniform.

6 The coils of the hairspring must not at any time touch each other or any object except the regulator fork.

7 The escapement must start with slight pressure on the input gear.

8 End shake on all staffs should be between 0.004 and 0.008 inch.

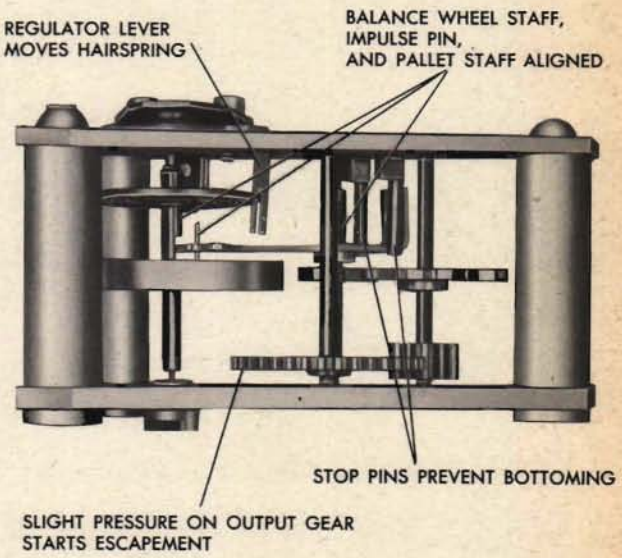

Bench checking the time motor regulator

1 The friction relief must slip when the gear is turned clockwise.

2 Eccentric studs and the cam nut must be tight.

3 The contact arms must move freely on the pivot pin. The contact arm rollers must be free.

4 The contacts should open when the cam is approximately 30° from the vertical.

5 Test the pigtail wiring and contacts for continuity.
CAUTION: Never apply 115-volt A.C. to the terminals of the motor regulator. It will burn out the pigtails.

6 Install the time motor regulator in the instrument and run the time motor regulator test. As a guide for timing and adjusting, see OP 1140, page 216.

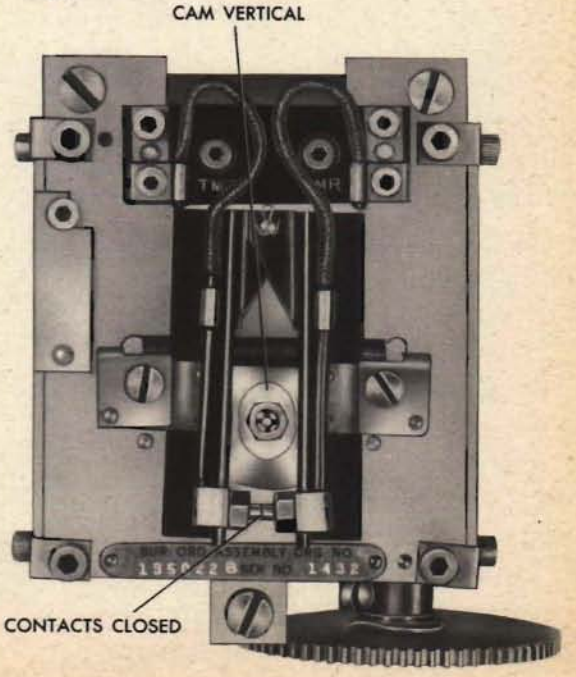

TIME OF FLIGHT MECHANISM

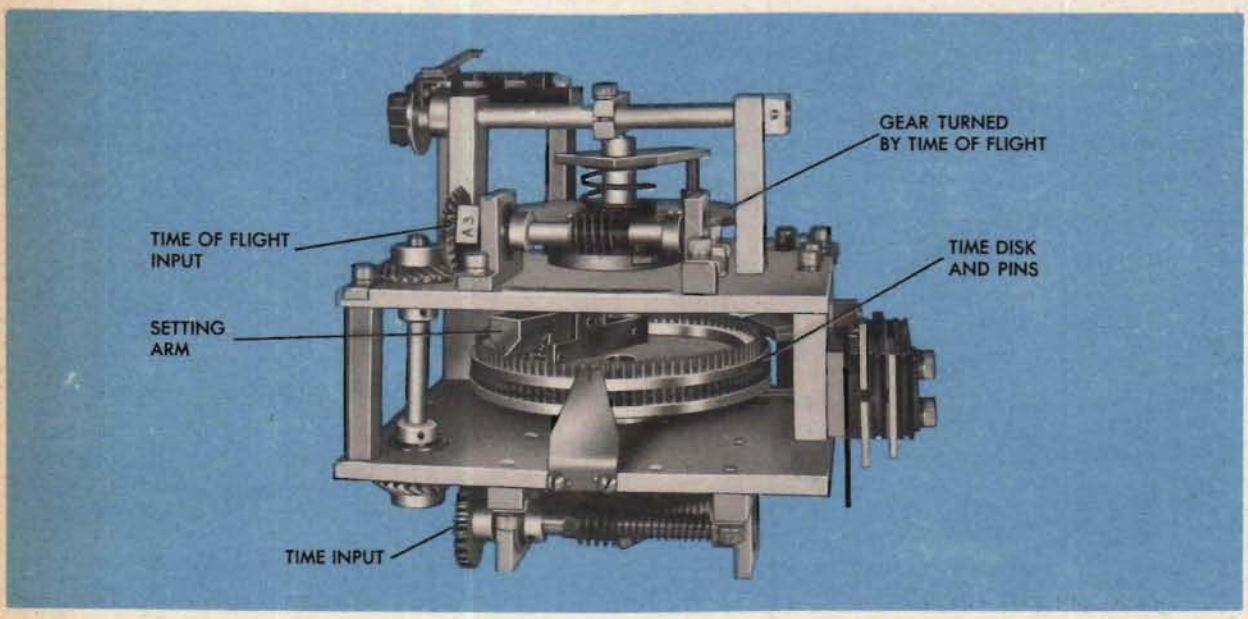

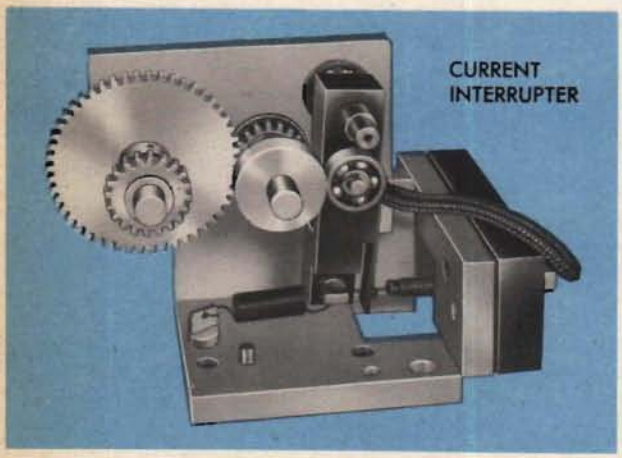

Units making up the time of flight signal system are a signal mechanism, current interrupter, signal button, and solenoid buzzers. Each of these units is mounted separately. The main parts of the signal mechanism are a setting arm, turned by the time of flight input, and a time disk containing 96 regularly spaced pins, turned by the time input. The time of flight mechanism operates in conjunction with the signal button and the current interrupter to produce signals in buzzers that are connected in parallel. One buzzer is in the instrument. Others are located at the observers' stations.

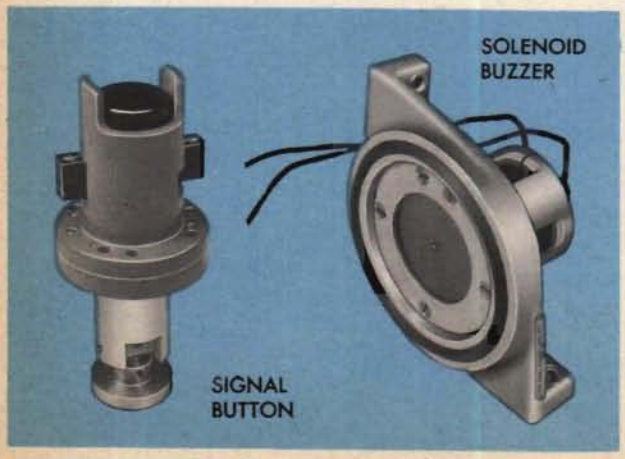

Complete disassembly is not always necessary to repair a unit of the system. Minor repairs may be made while a unit is intact or partially disassembled. Each unit of the system can be removed separately. If a unit must be removed, consult the instrument OP for instructions.

SIGNAL MECHANISM

Typical symptoms

If a test analysis indicates that the time of flight mechanism is not operating properly, first check the circuit for continuity and be sure it is supplied with 115-volt A.C. Also make sure that all adjustments are correctly made. Then look for one or more of the following typical symptoms:

JAMMING: One or more of the gears or other moving parts cannot be moved by hand. *Moving parts include the 96 pins in the time disk.*

STICKING: Gears or other moving parts resist motion or move sluggishly.

EXCESSIVE LOST MOTION: There is too much play between gears or other moving parts.

ELECTRICAL TROUBLE: Contacts do not open or close properly.

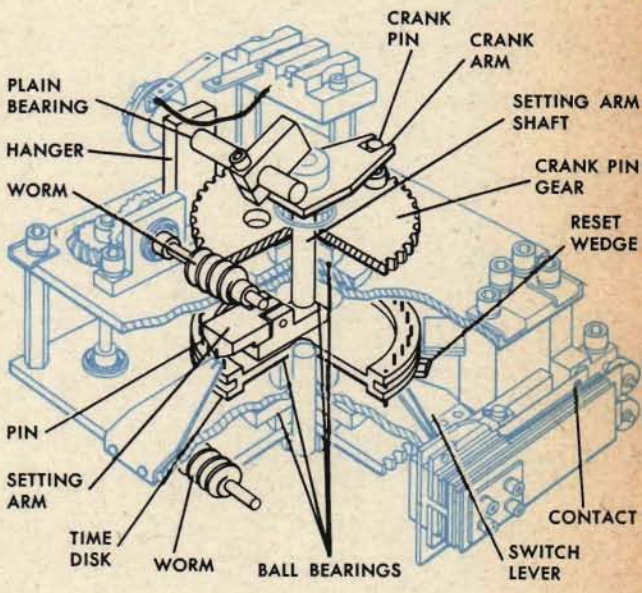

Locating the cause

Jamming or sticking

Jamming or sticking may be due to dirty or damaged gear teeth, bearings, or pins, or to a dirty or damaged crank arm, crank pin, setting arm, wedge and spring, worm, or worm gear. A bent shaft in either worm shaft line will cause binding of the worm at one point and excessive lost motion at another.

If the linkage cannot be moved by hand or resists moving, the plain bearings may be dirty or damaged, the hangers may be improperly positioned, the setting arm shaft may be damaged or dirty, or the crank pin may be damaged.

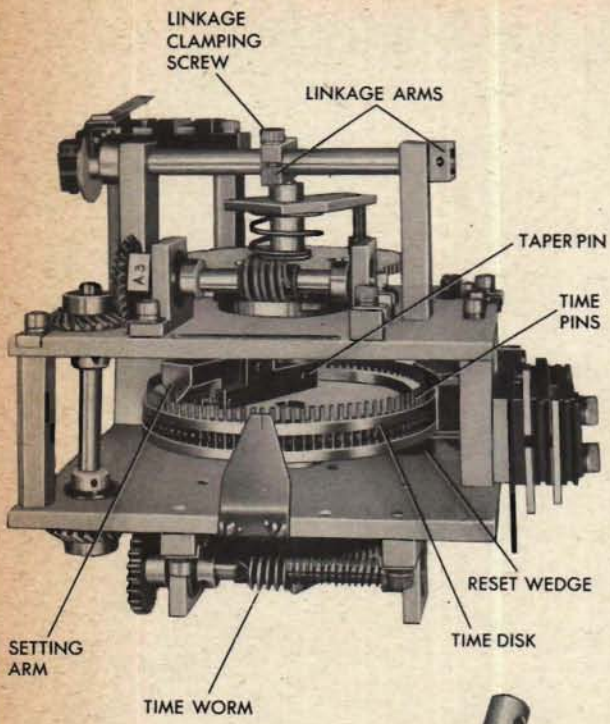

If the linkage can be moved by hand but none of the pins are pushed down when the linkage is moved, the linkage clamping screw may be loose; the taper pin holding the setting arm to the shaft may be missing; the relief spring in the setting arm may be weak, unhooked, or missing; one or more of the time pins may be frozen in the time disk; or the setting arm may be frozen to the pivot in a slightly elevated position.

A time pin may become damaged or bent by jamming against the wrong side of the reset wedge, if the time worm is frozen to its shaft and the time line is run backward for any reason.

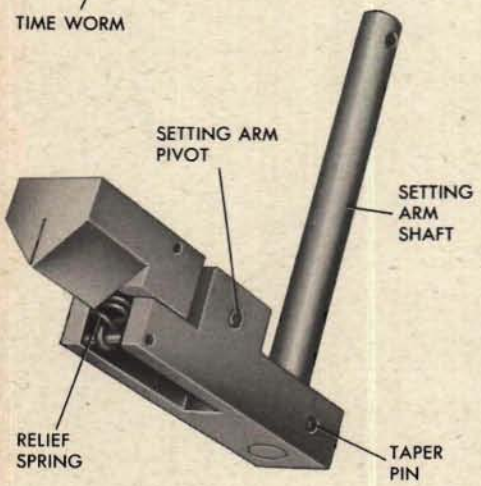

Excessive lost motion

Excessive lost motion between a time pin and its hole in the time disk may be due to enlargement of the hole caused by a bent pin. Pins may drop if the coil spring holding them is damaged.

Excessive lost motion may also be caused by improperly located hangers, by bent shafts, or by worn gears.

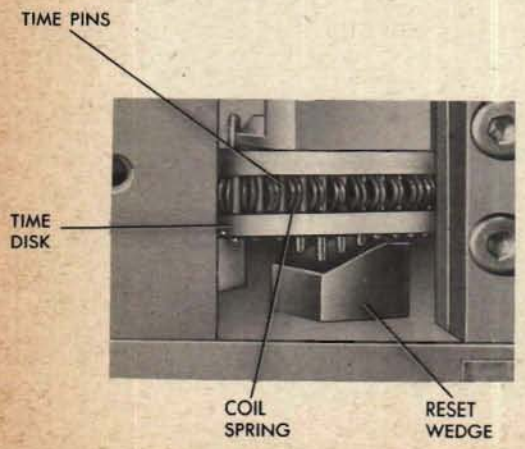

Electrical trouble

Electrical trouble in the time of flight signal system may be due to a casualty in the buzzer contact assembly attached to the time of flight mechanism.

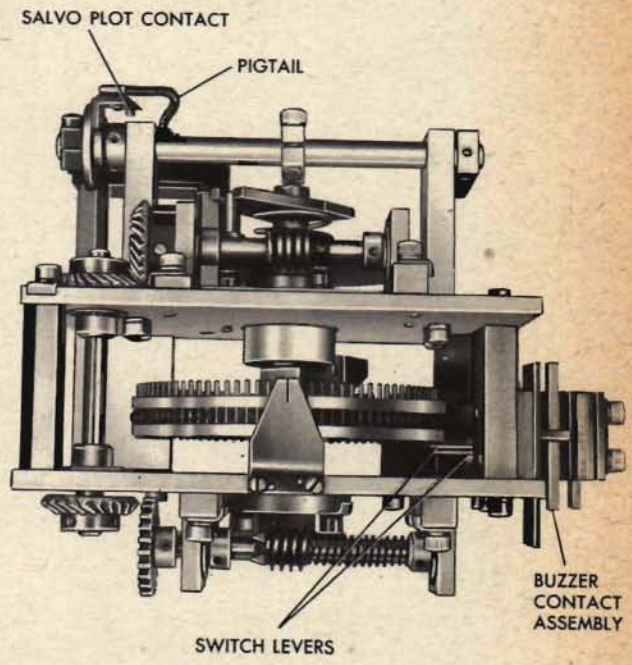

If the buzzer circuit is grounded, the trouble may be due to a bent contact which touches a metallic part of the mechanism. In reassembling the buzzer contacts, make sure the mounting screw bushings are replaced correctly; otherwise, the contact arms may ground against the screws.

Continuously sounding buzzers may indicate that the buzzer contacts are held closed. The contacts may be held closed if the switch lever pivot is jammed, hindering the spring action of the leaf-spring contact arm, if the contact is caught in the hole in the backing strip, or if a leaf-spring contact arm is bent out of shape.

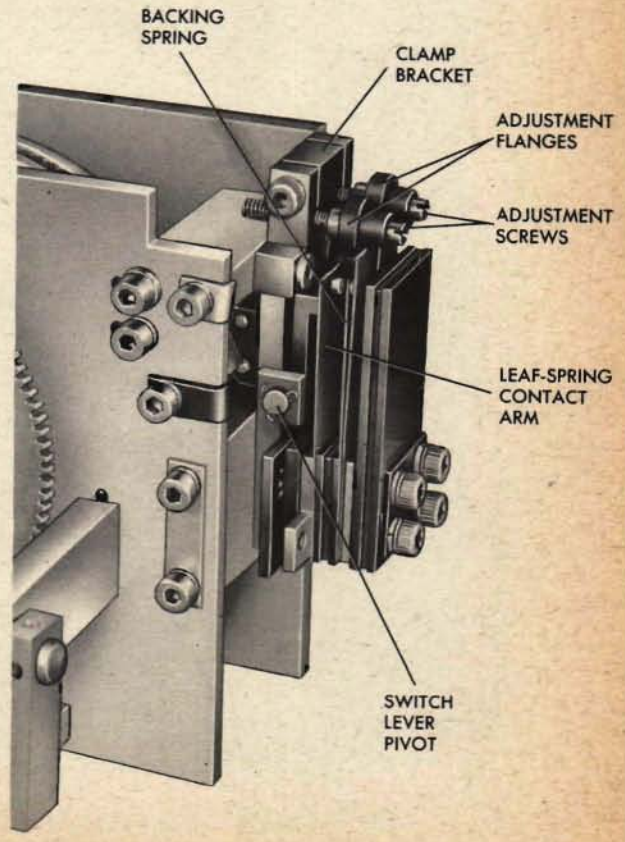

If the buzzer fails to sound, probably the adjustment screws are backed out too far. Consult the instrument OP for instructions on adjusting the contact gap. Make sure that the clamp bracket holds BOTH adjustment screws. An open in the time of flight mechanism buzzer circuit may also be due to dirty contacts or a broken lead.

Disassembling the signal mechanism

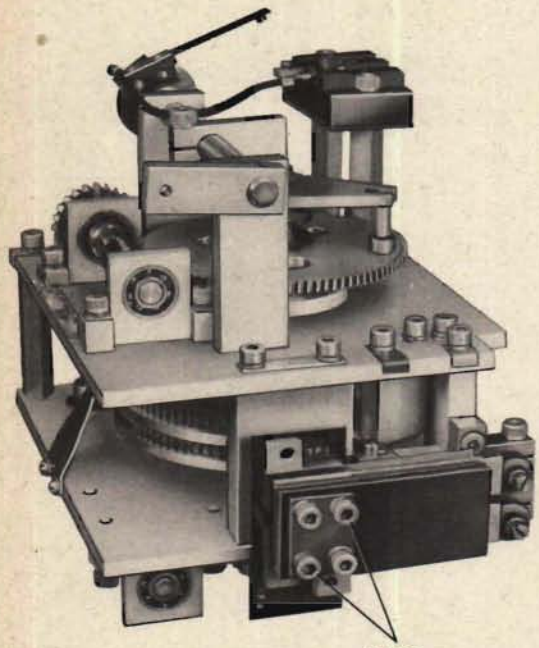

1 Remove the two long screws in the contact assembly and lift off the contact and lever assemblies.

2 Loosen the short screws until the lever assembly is separated from the contact assembly. Do not take the screws out completely, because they hold the contact assembly together. The stamped insulation strip is part of the contact assembly.

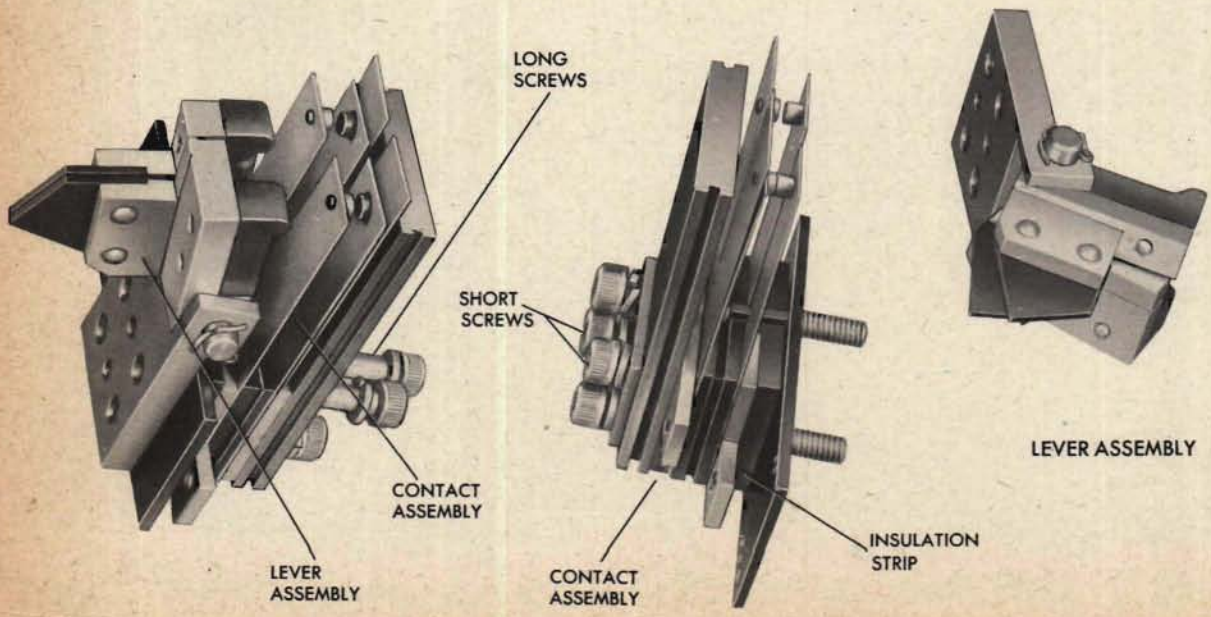

3 Remove the cotter pin in the lever assembly, slide out the pivot pin, and separate the parts. Tag the spacer.

4 Take out the two screws which hold each bakelite shoe to its lever.

5 Remove the two short screws remaining in the contact assembly and lift off the steel screw plate. The four insulation bushings tend to hold the other parts in position. If necessary, draw a sketch of the parts and the assembly order as an aid in reassembly.

The parts of the contact assembly now to be disassembled are in order: bakelite insulation strip, small insulation block, two small terminal plates, two short-spring contact arms, slotted insulation block, two backing strips, two long-spring contact arms, large terminal plate, and large insulation block.

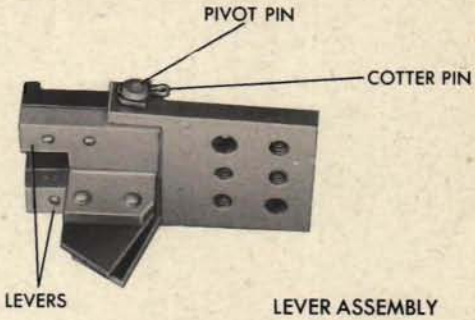

LEVER ASSEMBLY

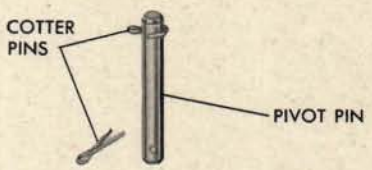

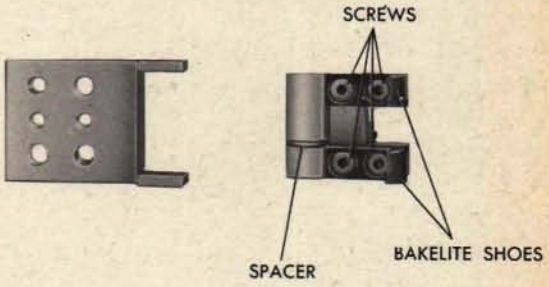

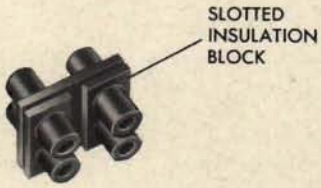

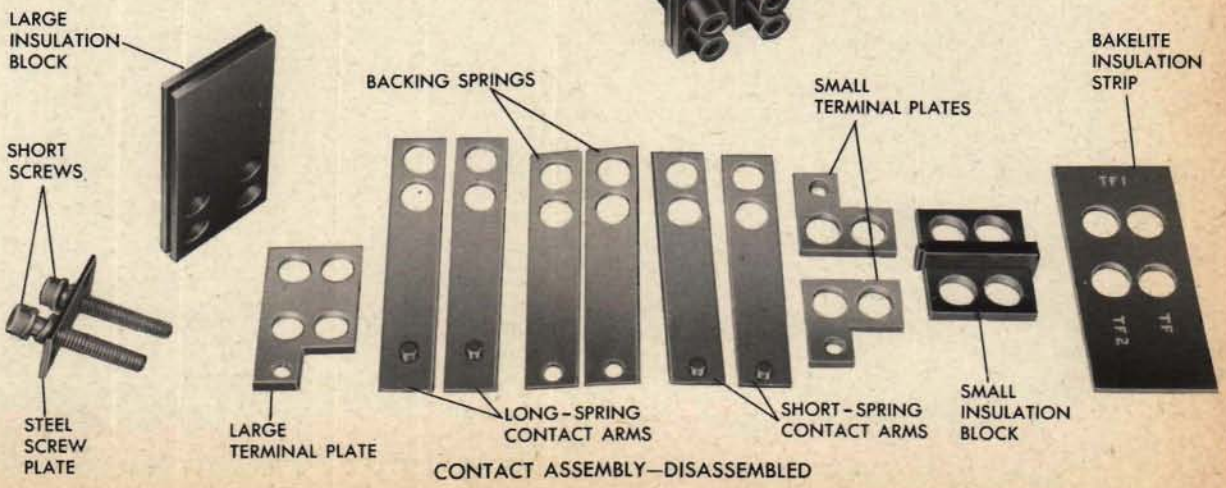

CONTACT ASSEMBLY—DISASSEMBLED

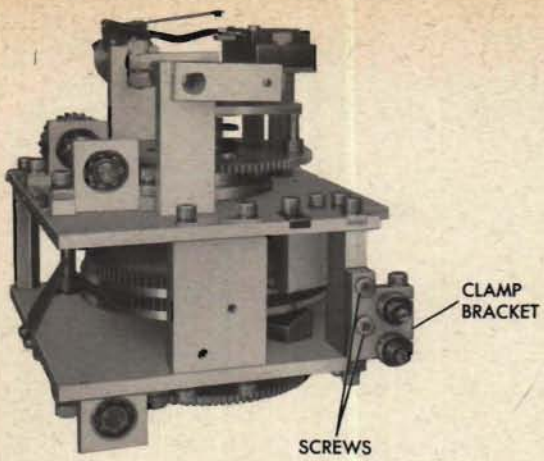

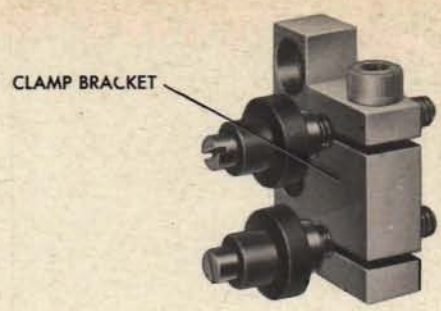

6 Remove the clamp bracket with the adjustment flanges by removing the two screws.

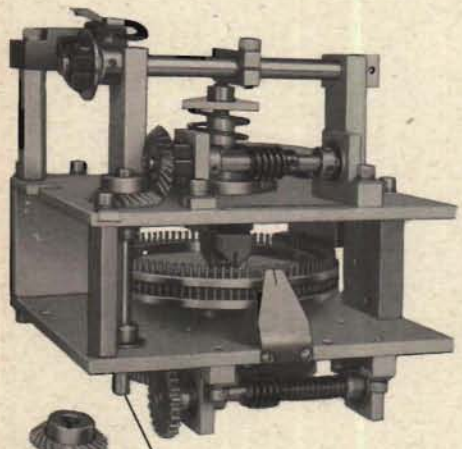

7 Drive the taper pin out of the lower bevel gear on the time of flight input line and remove the gear.

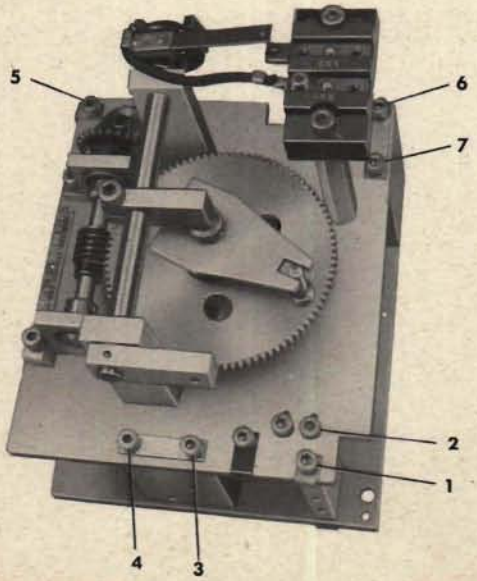

8 Take the seven screws out of the top section and separate the top section from the bottom section.

9 In the lower section, remove the time disk by driving the taper pin out of the worm gear hub on the time disk shaft.

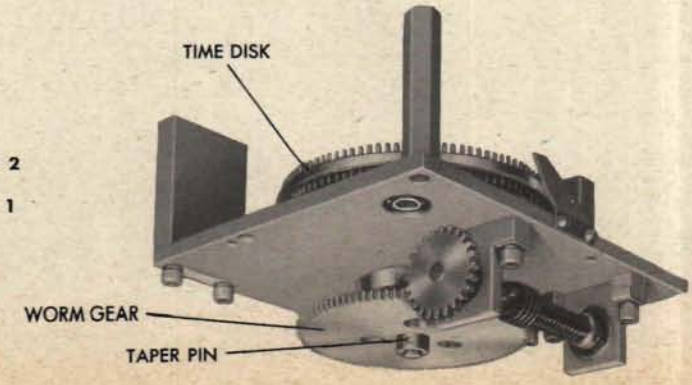

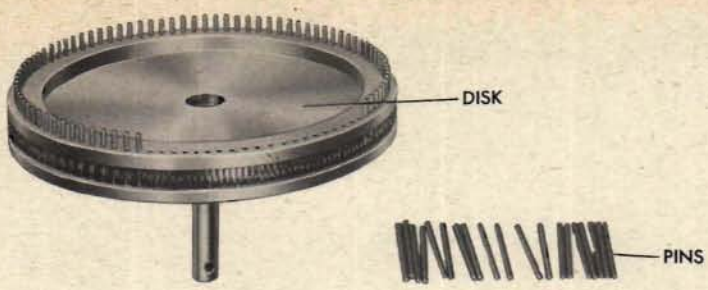

10 Push the pins out of the disk *by hand* (tools may burr them). Be careful not to pull the spring loose from the time disk.

11 In the upper section, remove the salvo plot contact by disconnecting the pigtail at the terminal and opening the clamp. Tag the spacer.

12 Remove the linkage assembly by taking out the four screws which secure the hangers to the plate.

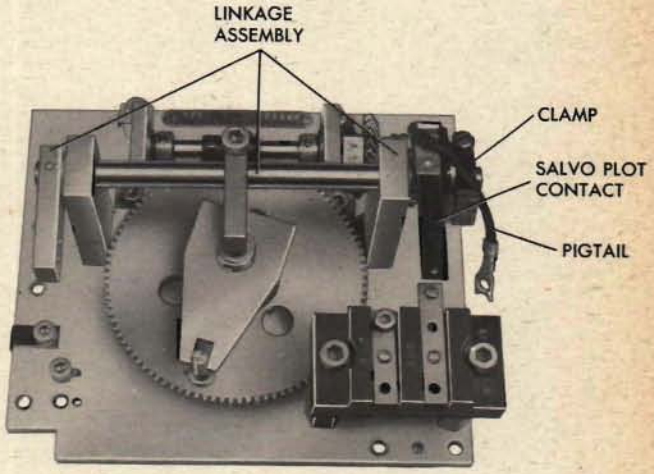

13 Drive the taper pin out of the crank arm and remove the crank arm and the coil spring.

14 Slide the setting arm and shaft out of the adapter.

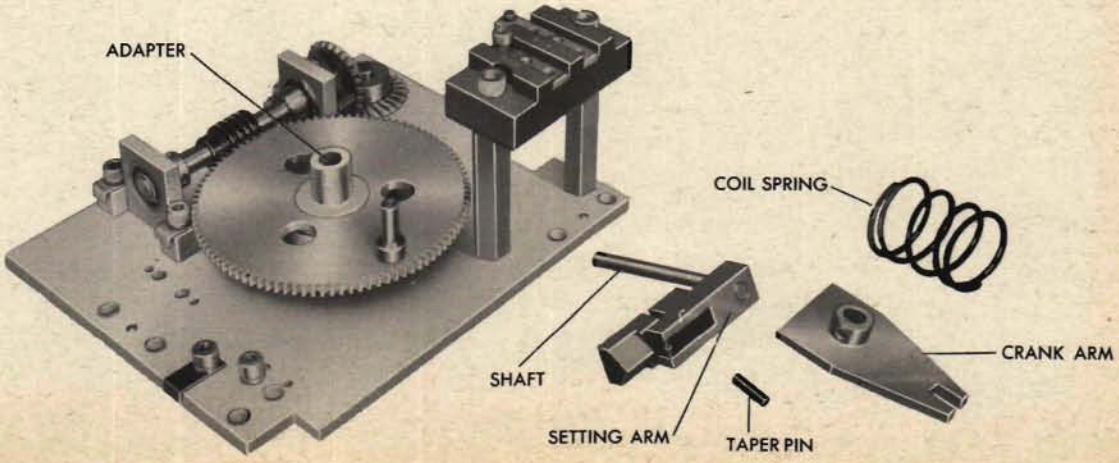

Repairing the signal mechanism

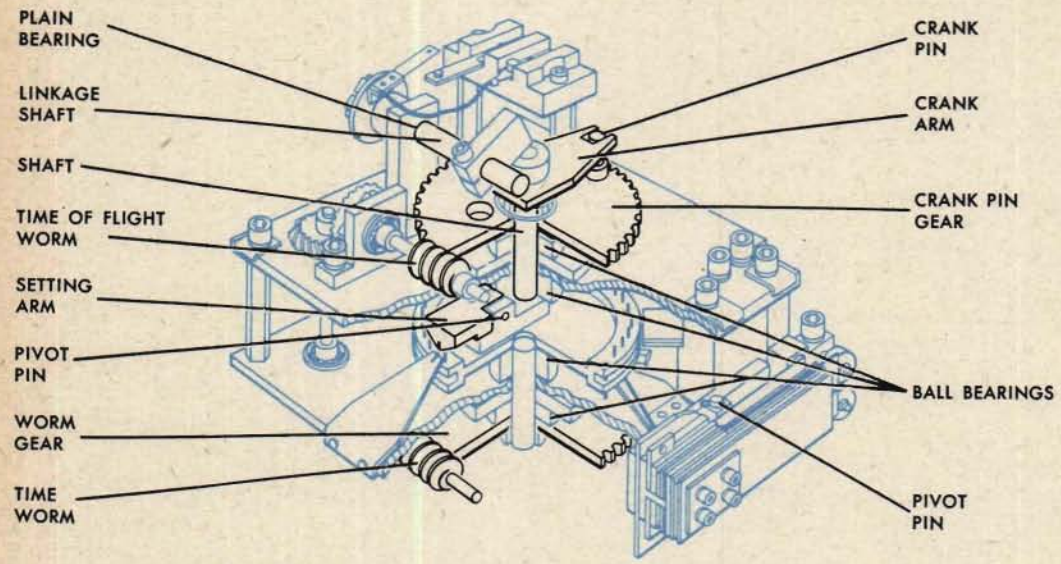

Cleaning, repairing or replacing moving parts

The moving parts are gears, bearings, pivot pins, worms, the setting arm shaft, time disk, setting arm, crank arm, crank pin, and the linkage shaft. Parts should be cleaned with an approved solvent. Remove burrs by polishing, being careful not to remove excessive amounts of metal. After repairing, apply an approved lubricant to the parts.

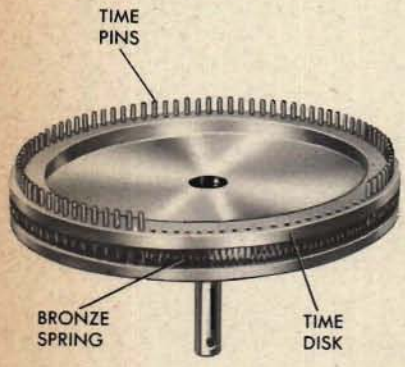

Repairing or replacing the time disk

Polish a time pin that is burred. If a pin is too small or the hole in the time disk is too large, an oversize pin can be used. Consult the assembly drawing for the size and material of the pin.

If the time disk is so badly damaged that a large number of the 96 pins have to be replaced, use a new disk.

A bent pin may jam in the time disk. Check its straightness by rolling it under a finger on a flat surface. Pins are difficult to straighten; hence it is desirable to replace them. Lubricate the pins before reassembly.

If the bronze spring in the time disk should become slightly distorted, it can usually be reshaped by hand. A badly damaged spring should be replaced.

Cleaning and repairing contacts

Remove the contact arm before cleaning or repairing it to avoid bending it out of shape. If the contacts are pitted or dirty, polish them down to a smooth finish with a fine oil stone, or very fine abrasive paper. Keep the contact surface square while polishing. Never use an abrasive coarse enough to leave visible scratches. Scratches favor arcing which tends to pit and dirty the contacts anew.

Sometimes a high-resistance circuit will result if the riveted shank has become loose in the leaf-spring contact arm. Usually this condition can be repaired by reriveting the shank.

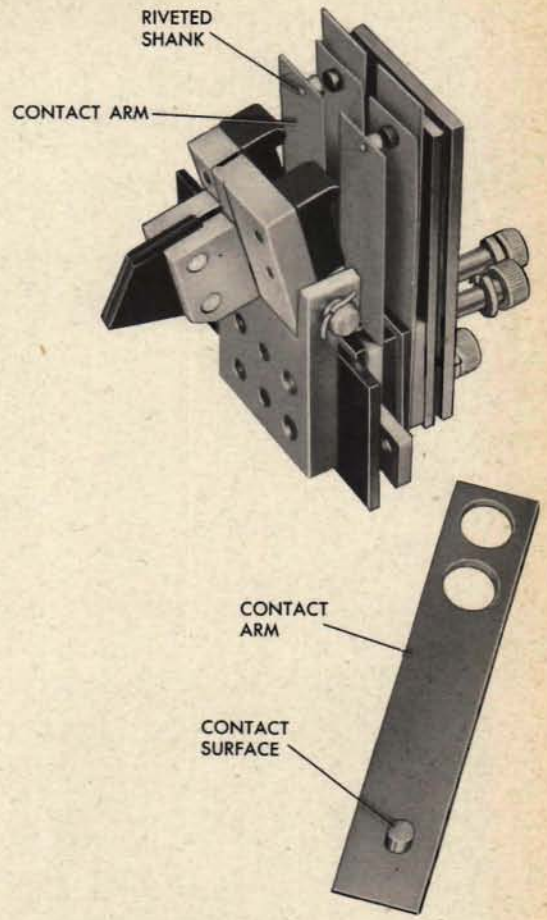

Clamp adjustments

Clamps that have slipped or clamps that have been improperly adjusted are a main source of trouble in the signal mechanism. There are four clamps on the mechanism unit: one on the linkage, one on the salvo plot contact, another on the time of flight input shaft, and the clamp bracket which holds the contact adjustment screws in position. One or more of the three regular adjustment clamps may be slipping because the clamp is not well fitted to the shaft. The remedy will be found in the chapter on *Shaft Lines,* page 92.

In order to determine whether a clamp is properly adjusted or to readjust a clamp, refer to the instrument OP.

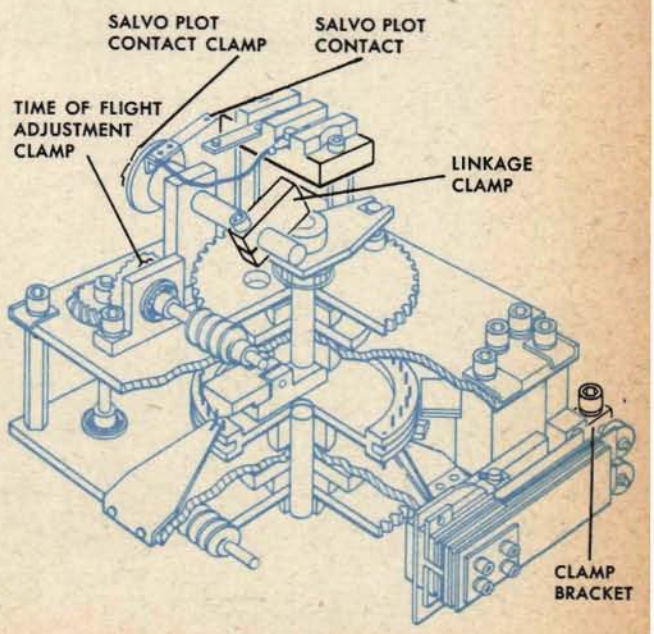

Reassembling the signal mechanism

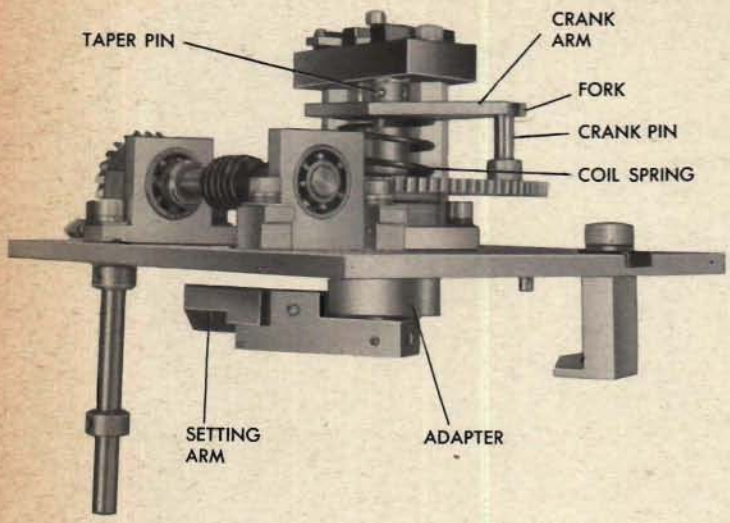

Be sure to lubricate the parts before reassembly.

1 Replace the setting arm and shaft in the adapter in the upper section. Lubricate the shaft with an approved lubricant.

2 Replace the coil spring on the shaft.

3 Mount the crank arm on the shaft with the crank pin in the fork. Pin the arm to the shaft.

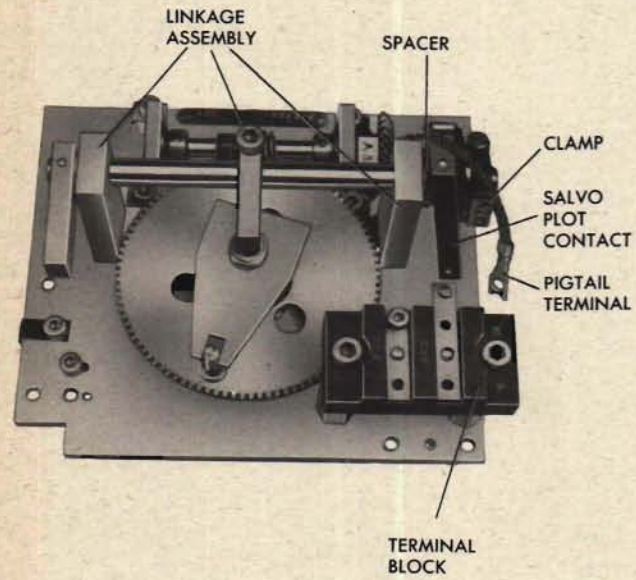

4 Replace the linkage assembly on the upper section. Space the hangers properly so that the shaft moves freely in the hangers.

5 Replace the spacer and the salvo plot contact and clamp. *Do not connect the pigtail to the terminal block.*

6 Replace the time disk in the adapter in the lower section.

7 Pin the worm gear to the shaft.

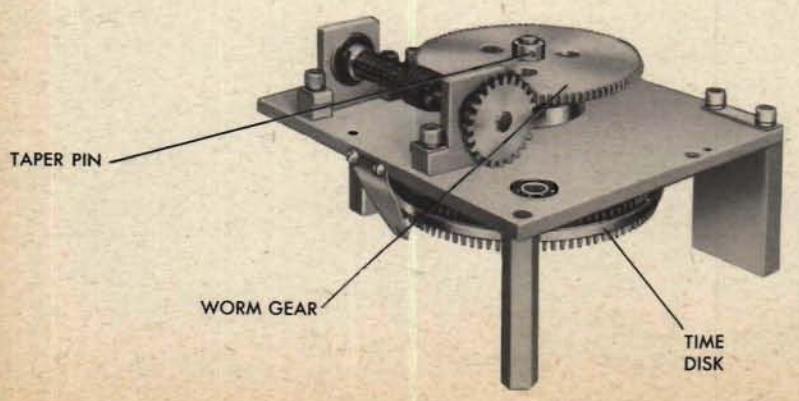

8 From the top, insert any pins which have been removed. Push them in part way. Hold a small screw driver between the coils and push the pin in the rest of the way. *Do not use force* or the spring will be damaged.

To even out the pins, turn the time disk counterclockwise.

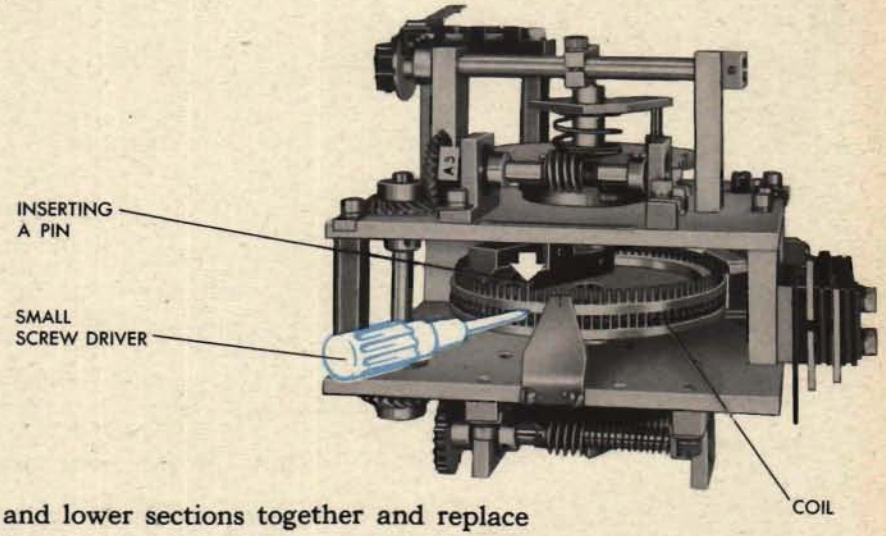

9 Put the upper and lower sections together and replace the seven screws.

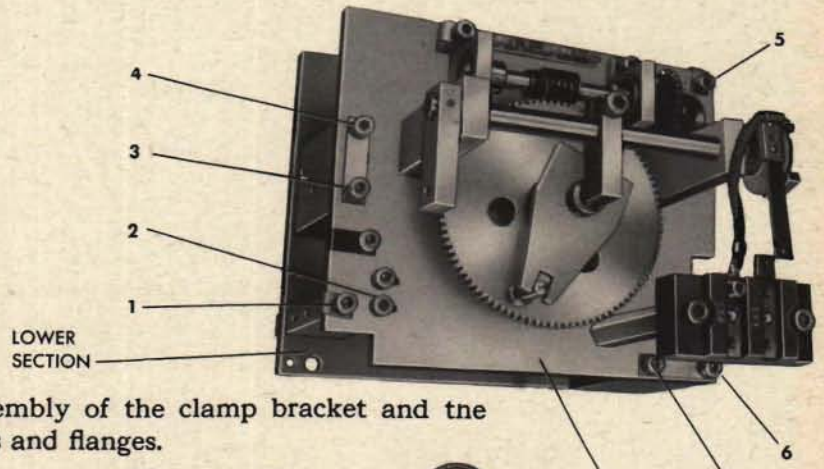

10 Remount the assembly of the clamp bracket and tne adjustment screws and flanges.

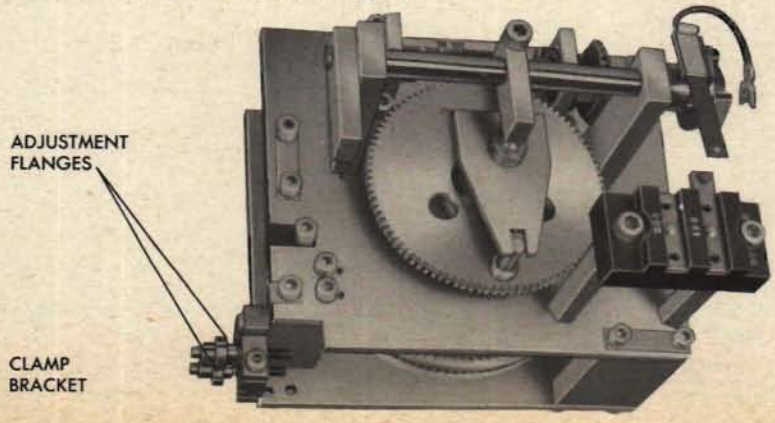

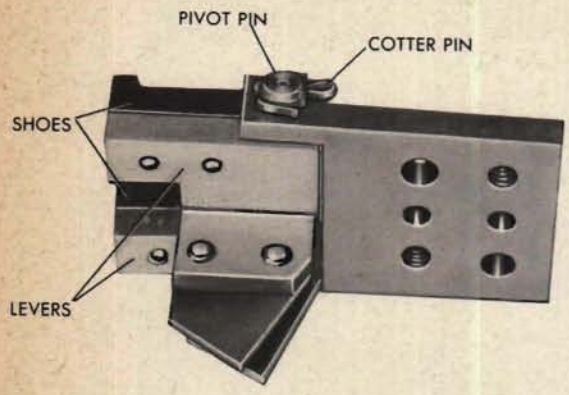

11 Reassemble the levers and the shoes on the pivot pin and fasten with the cotter pin. *Do not omit the tagged spacer.*

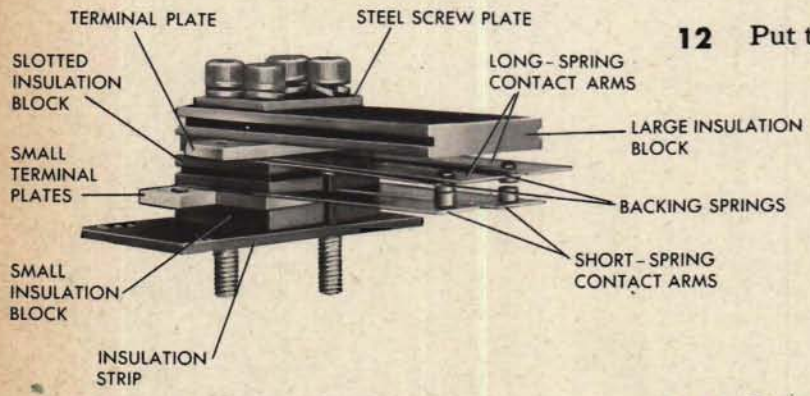

12 Put the contact assembly together.

13 Remount the contact assembly and lever assembly on the unit.

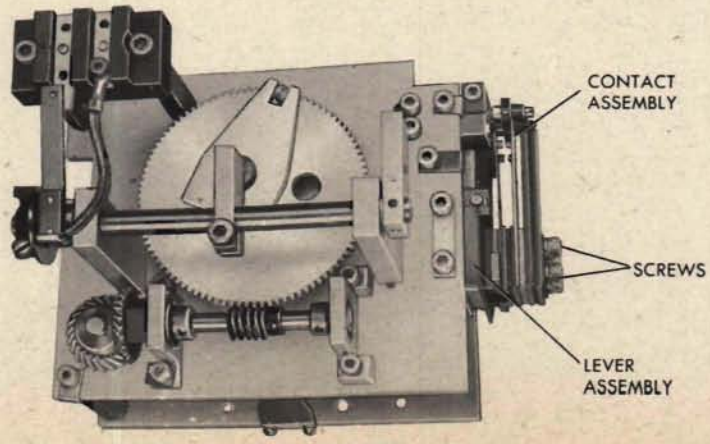

14 Pin the bevel gear to the shaft.

15 Connect the pigtail to the terminal block.

16 Adjust the contact assembly mechanically and tighten the screw on the clamp bracket.

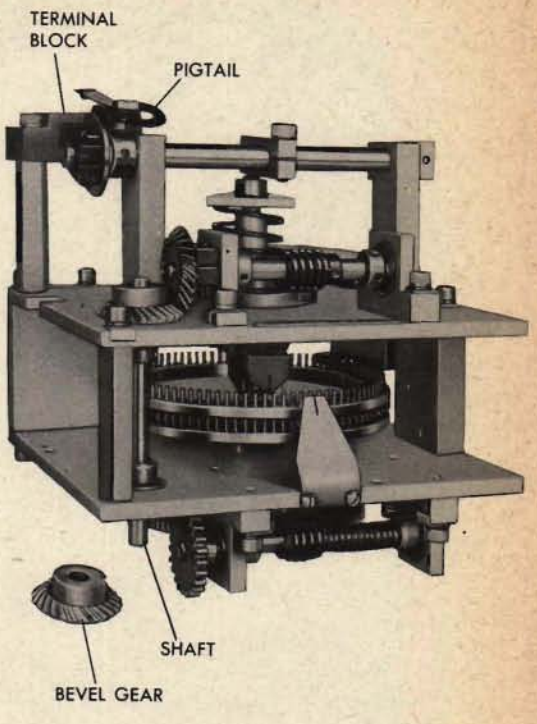

Bench checking the signal mechanism

1 All gears, bearings, and other moving parts should be lubricated with approved lubricant.

2 All contacts should be clean.

3 All moving parts, such as the setting arm, the linkage, the crank arm, and pins in the time disk, should operate freely.

4 There should be minimum lost motion between the gears, and minimum end shake in the shafts. The lines should turn freely.

5 The movable worm on the time input shaft should be free to move axially on the input shaft.

6 All adjustment clamps, including the clamp bracket and screw, should have sufficient holding power.

7 The pins should strike the levers correctly.

8 The levers should move freely on the pivot pin.

9 The contact assembly should be checked with the assembly drawing.

10 When the time disk is turned so that a pin engages both levers, the contact adjustment screws should be positioned so that the contacts make light but definite contact.

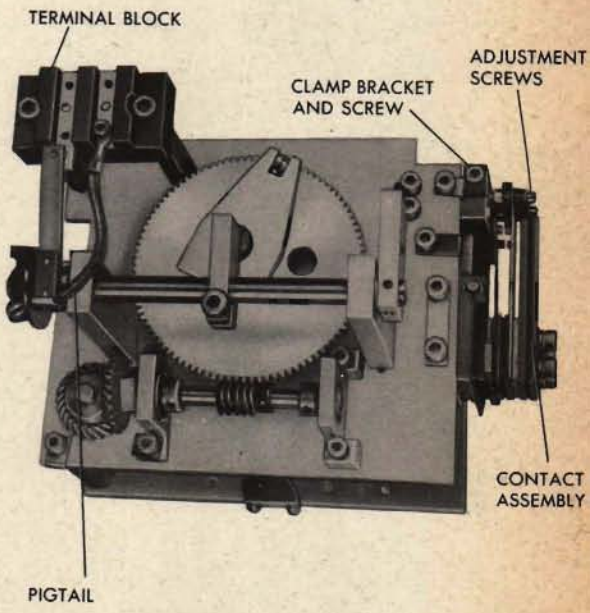

THE SOLENOID BUZZER
FRONT VIEW

SOLENOID BUZZER

Typical symptoms

The best way to test for trouble is to pass 115-volt A.C. through the coil. If the buzzer does not give a steady signal, look for the following:

No sound

Intermittent sound

Tinny sound

Weak sound

THE SOLENOID BUZZER
REAR VIEW

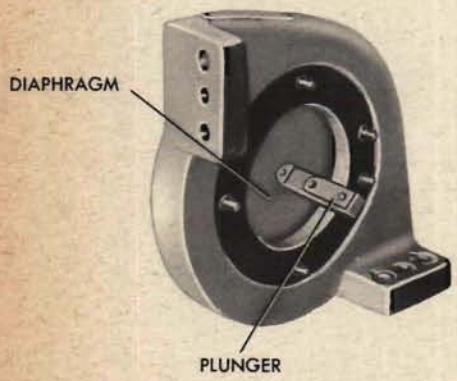

Locating the cause

LACK OF SOUND may be due to the following causes: The plunger in the coil assembly may be jammed so that the diaphragm cannot vibrate. The adjusting stop screw may be moved so far in that the plunger cannot function. The coil in the buzzer may be shorted or burned out. The soldered lead may be broken off at the coil terminal.

AN INTERMITTENT SOUND will result if the plunger is sticky.

A TINNY SOUND may be caused by a cracked diaphragm.

A WEAK SOUND or a hum indicates that the stop screw has backed out so far that the plunger cannot strike.

Disassembling the buzzer

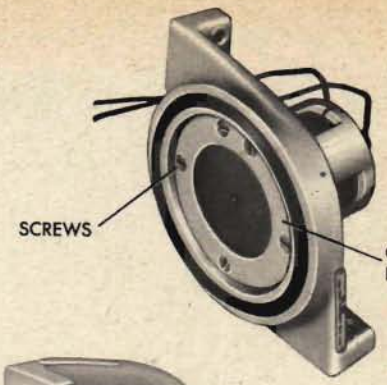

1 Loosen the five long flat-head screws which are staked in the clamping ring. This will separate the coil assembly and the bracket.

2 Remove the bracket assembly parts in this order: screws, clamping ring, insulation ring, diaphragm and plunger, insulation ring, bracket, and the other insulation ring.

NOTE: There are five bakelite bushings in the bracket through which the flat-head screws pass.

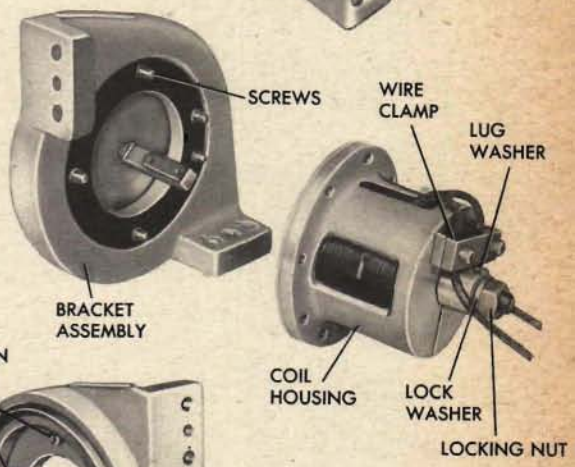

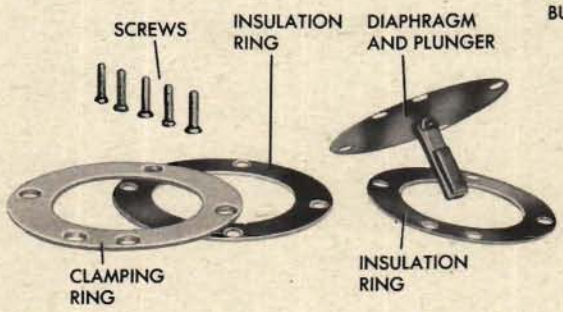

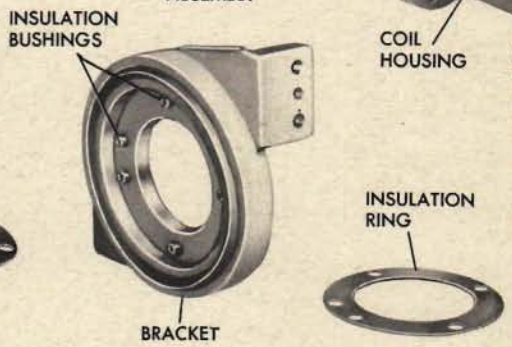

3 From the rear of the coil housing, remove the two bakelite pieces which act together as a clamp for the leads.

4 Remove the hexagonal locking nut, lock washer, and lug washer.

5 Back the adjusting screw out of the coil housing.

6 From the other end of the coil housing, remove the four small flat-head screws which hold the coil in the housing. Be careful not to break the connection at the coil terminal.

7 Separate the coil assembly from the housing.

8 The split insulation disk between the coil assembly and the housing can be removed by pushing or lifting it out. Be careful not to break it.

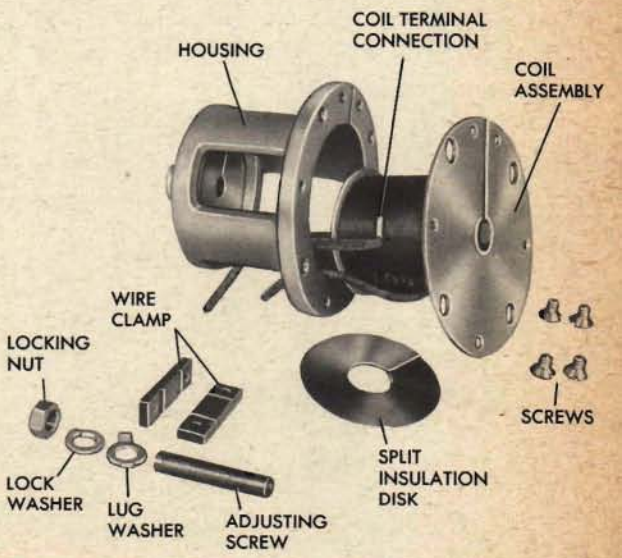

Repairing the parts

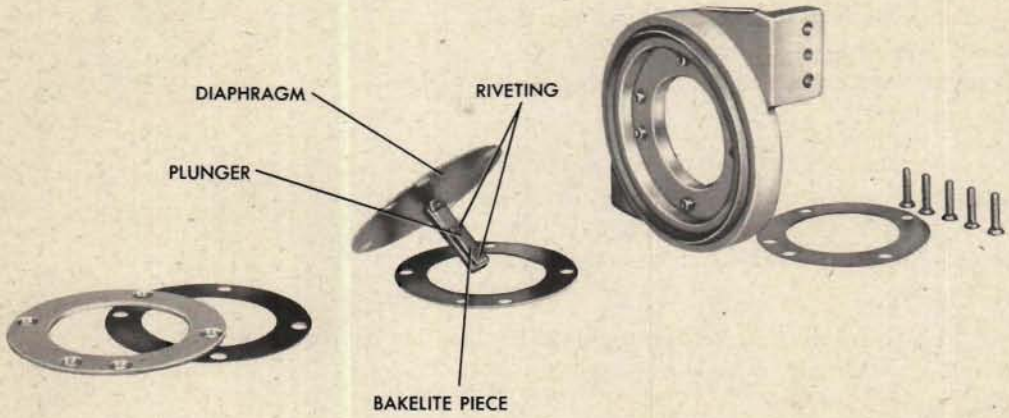

Repairing a jammed or stuck plunger

Remove the diaphragm and the plunger which is riveted to it. Then remove the high spots from the bakelite pieces on the plunger. *Do not use lubricant to relieve binding.*

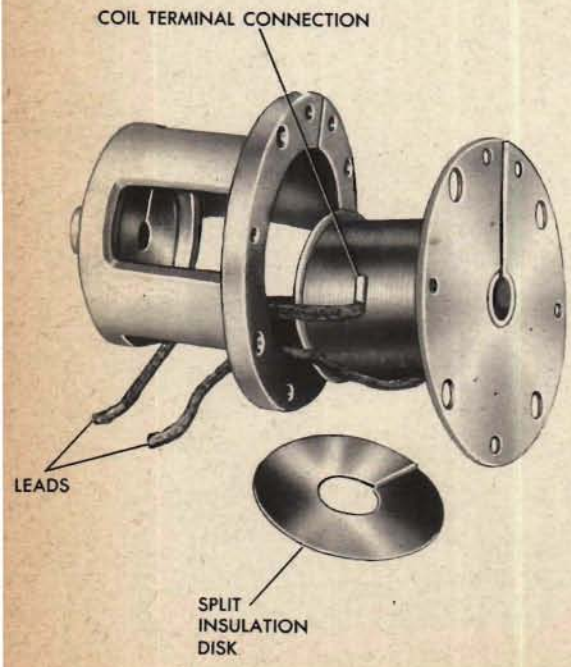

Replacing a burned-out or shorted coil

A burned-out or shorted coil must be replaced. In an emergency where no replacement is available, the coil assembly can be rebuilt. Consult the assembly drawing for wire size and construction details.

Repairing broken leads or terminal connections

See the chapter on *Wiring*, page 380.

Replacing a cracked diaphragm

If the diaphragm is cracked, both the diaphragm and the plunger must be replaced. When riveting, make sure that the plunger is perpendicular to the diaphragm.

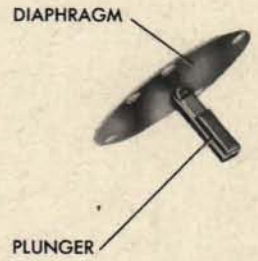

Reassembling the buzzer

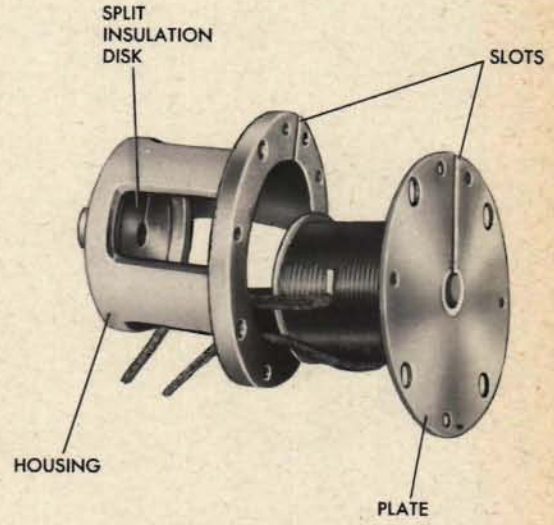

1 Replace the split insulation disk in the housing.

2 Run the leads from the coil assembly through the opening in the housing. Line up the slot in the coil assembly plate with the slot in the housing.

3 Seat the coil assembly in the housing and secure it with the four screws. *Stake the screws.*

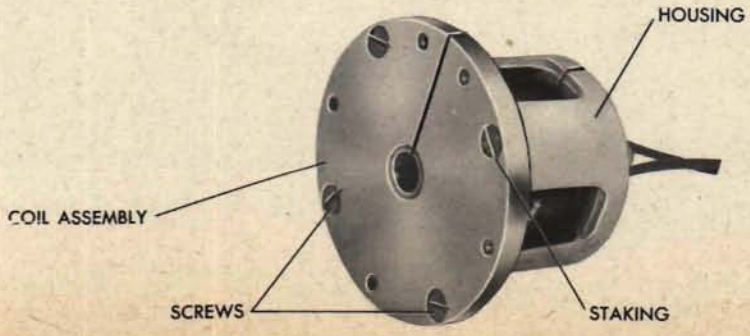

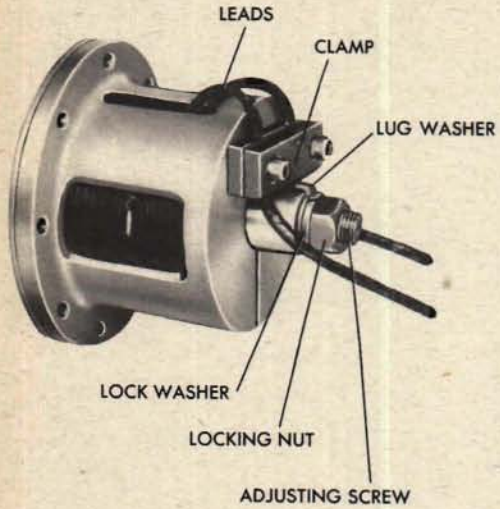

4 Replace the adjusting screw with its slotted end out.

5 Remount the lug washer, lock washer, and the locking nut on the screw.

6 Fasten the leads to the housing by means of the bakelite clamp. To avoid breaking the connections at the coil terminal, be sure the leads are left slack.

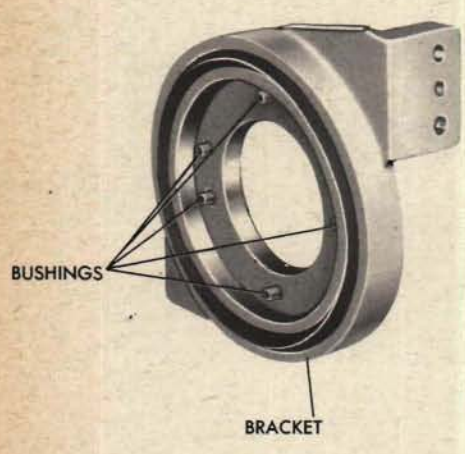

7 Replace the five plastic bushings in the bracket.

8 Mount the rings and the diaphragm in their correct order in the bracket, *with the insulation rings between the metal parts.*

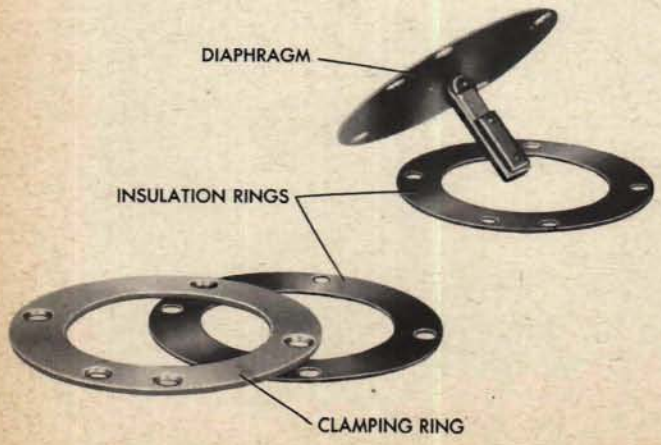

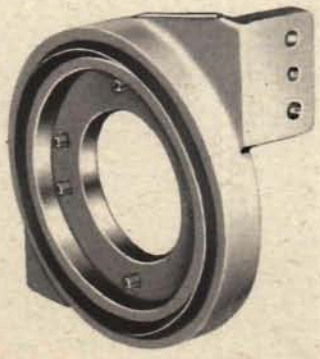

9 Insert the five long flat-head screws. Put the insulation ring over the ends of the screws. Mount the coil assembly and tighten the screws.
Be very careful not to break the diaphragm at the point where it is riveted to the plunger.

10 Apply 115-volt A.C. to the coil. Turn the adjusting screw to obtain the maximum volume of sound. Tighten the locking nut.

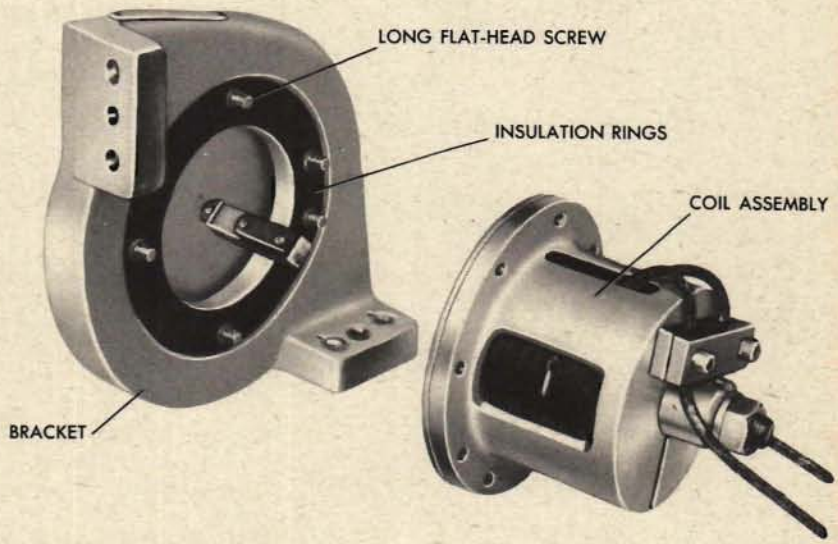

Bench checking the buzzer

1 The leads should be soldered to the coil.

2 All the flat-head screws should be staked.

3 Test the volume of sound by passing 115-volt A.C. through the unit.

4 The locking nut should be tight.

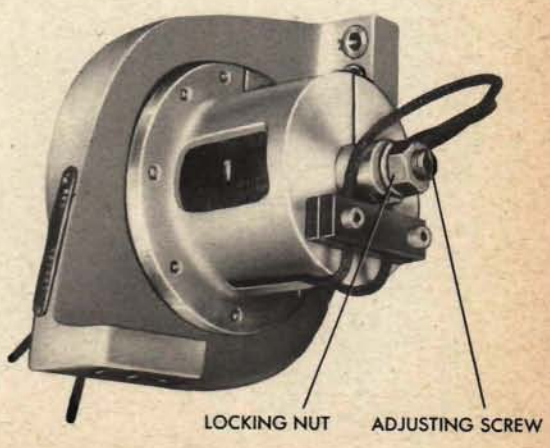

CURRENT INTERRUPTER

Essentially, the current interrupter is a pair of contacts which are made to open and close rapidly. One contact is attached to a pivoted bakelite arm; the other contact is mounted in a screw. A follower on the arm is held against a cam by spring tension. Turning the cam opens and closes the contacts.

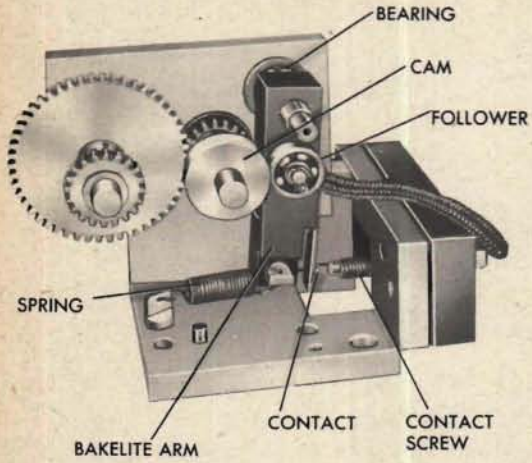

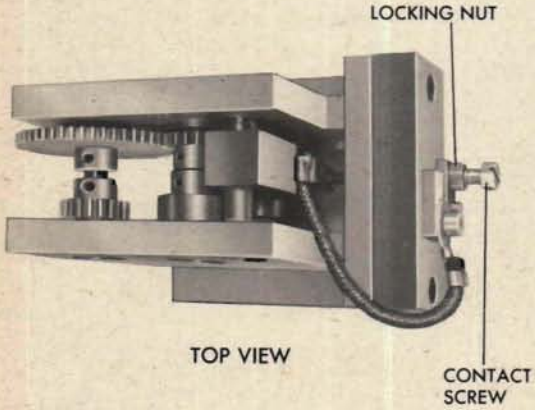

TOP VIEW

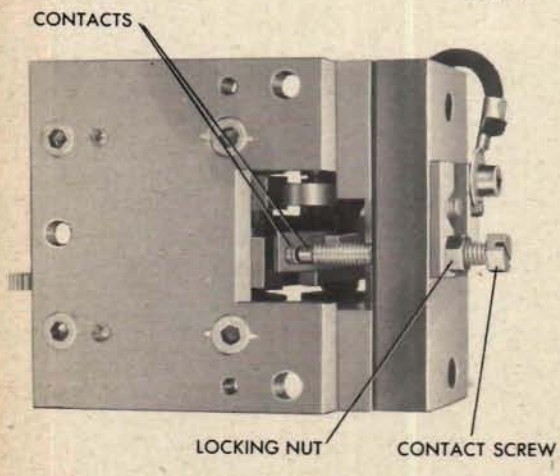

BOTTOM VIEW

Typical symptoms

If the buzzers do not sound the time of flight interrupted signal properly, the current interrupter may be at fault. Look for one of the following typical symptoms in the current interrupter.

JAMMING: The shaft line cannot be turned, or the bakelite arm cannot pivot.

STICKING: The shaft line resists turning past certain points or turns sluggishly. The bakelite arm pivots sluggishly.

ELECTRICAL TROUBLE: The buzzer circuit does not open and close, even though the contacts do.

Locating the cause

Jamming or sticking

A jammed or sticky shaft line may be the result of dirty or damaged gear teeth or bearings. If the gearing is jammed the buzzer circuit may be open or may be closed continuously, depending on the position of the cam.

A jammed or sticky bakelite arm is usually due to dirty or damaged bearings. If the bakelite arm does not pivot, the buzzer circuit usually is closed.

Electrical trouble

If the buzzer circuit is open, even though the contacts can be seen to close as the cam rotates, probably the pigtail lead has an open or the contacts are dirty.

If the buzzer circuit is not functioning properly, even though all parts seem to operate smoothly, probably the contact screw is out of adjustment. If the circuit is always closed, the contact may be screwed in too far. If the contact is always open, the contact screw may be backed out too far. The contacts can be adjusted without removing the current interrupter from the instrument. Always tighten the locking nut after an adjustment has been made.

Disassembling the current interrupter

Disconnect the leads from the bus bars of the current interrupter. Take out the two screws which fasten the unit to the large plate and remove the unit from the instrument.

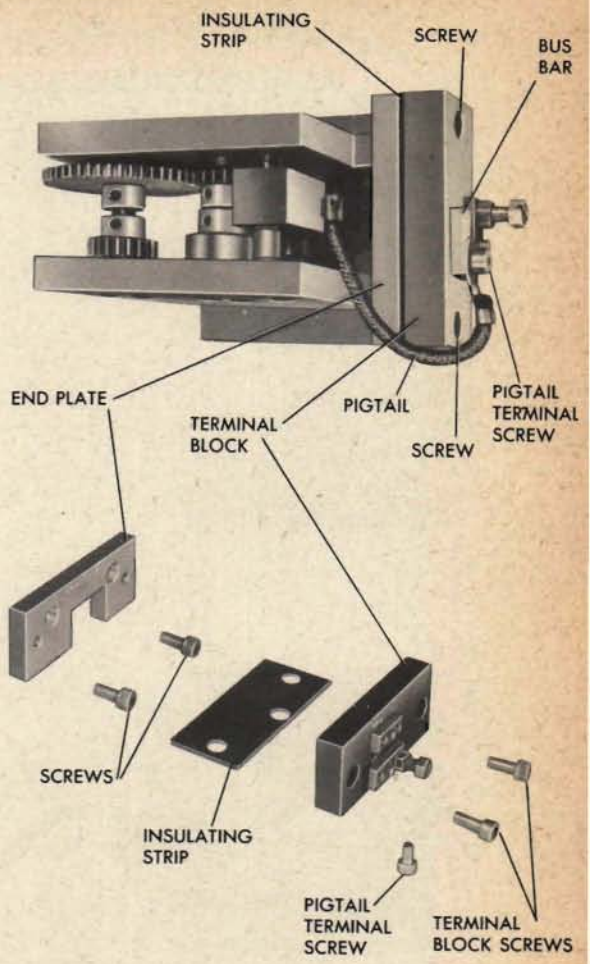

1 Disconnect the pigtail wire from the bus bar.

2 Remove the two screws holding the terminal block and insulating strip to the end plate.

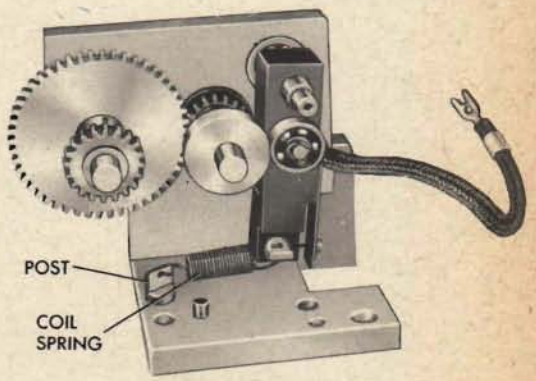

3 Take out the two screws holding the end plate and lift off the plate.

4 Unhook the coil spring from the post in the bottom plate.

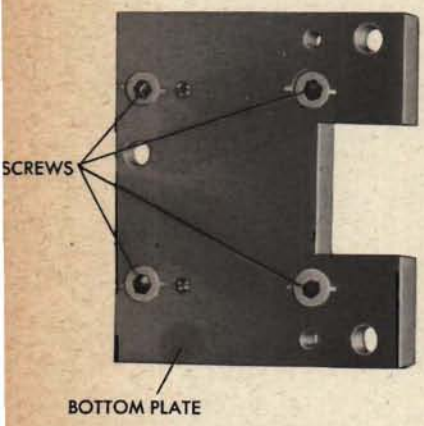

5 Remove the bottom plate by taking out the four staked screws.

6 Separate the two side plates and remove the small shafts. Tag the spacers on the shafts.

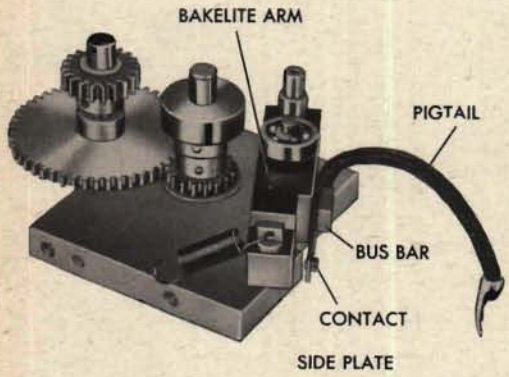

7 Remove the screw from the bus bar on the bakelite arm.

8 Separate the pigtail, backing strip and leaf-spring contact arm which are secured to the bakelite arm by a dowel pin and a screw.

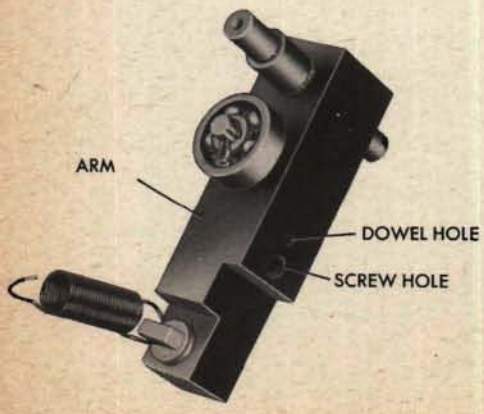

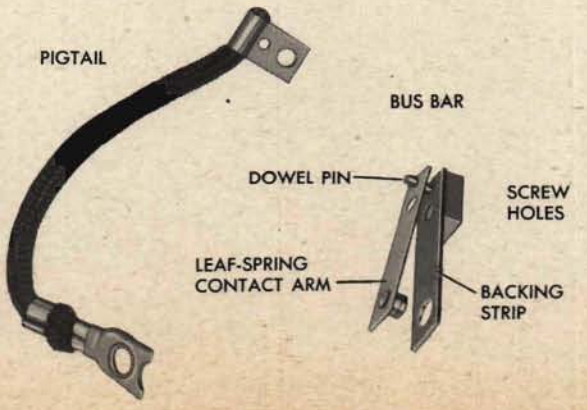

Repairing the parts

Cleaning the parts

Dirt should be removed by cleaning the parts with an approved solvent. Clean and repair the contacts, as described on page 521.

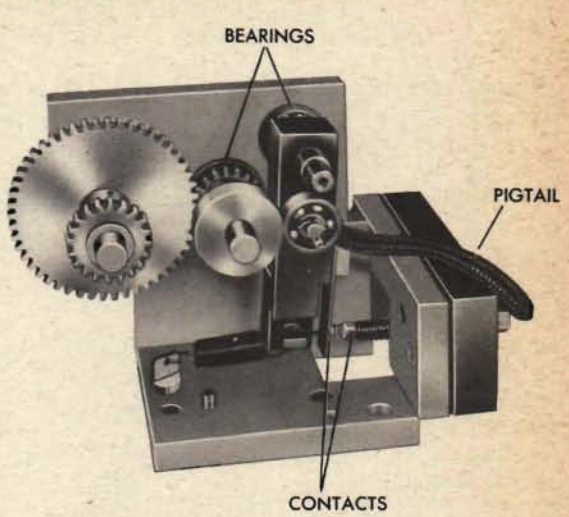

Repairing gear teeth, bearings, pigtails

Many repairs can be made without disassembling the unit. Burrs on gear teeth may be removed by a fine jeweler's file. Damaged bearings or damaged contacts should be replaced. If it is necessary to replace a pigtail, refer to the chapter on *Wiring*, page 380.

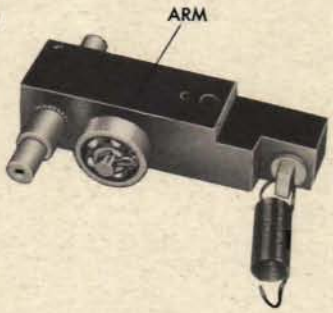

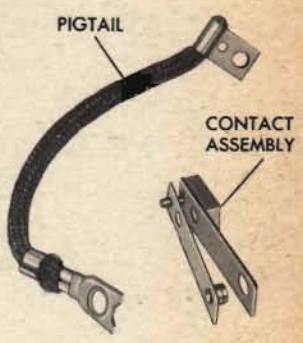

Reassembling the current interrupter

1. Remount the contact assembly and the pigtail on the bakelite arm.
2. Replace the three shafts in the plate, using the correct spacers.
3. Set the shafts in the other side plate.

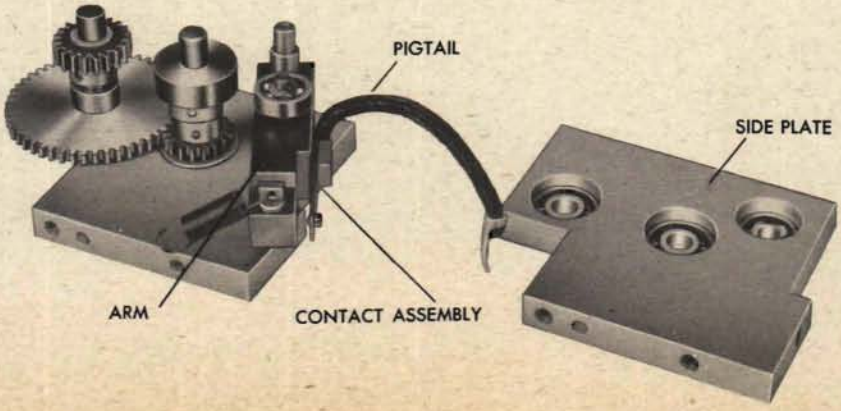

4 Mount the assembly on the bottom plate and stake the four screws.

Attach the coil spring to the post on the plate.

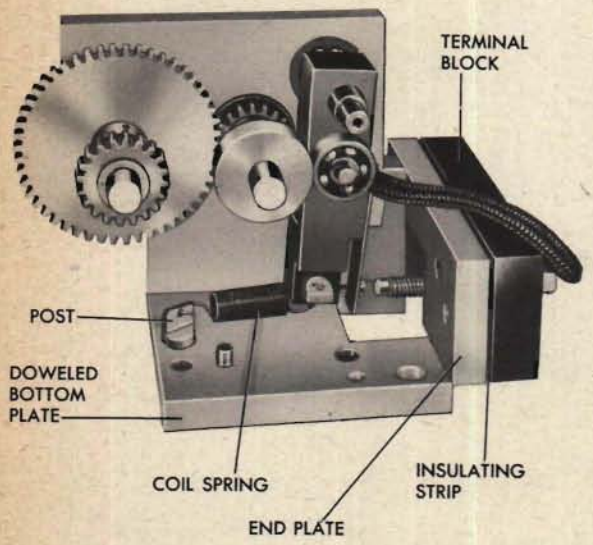

5 Replace the end plate.

6 Replace the insulating strip and the terminal block.

7 Connect the pigtail to the upper bus bar.

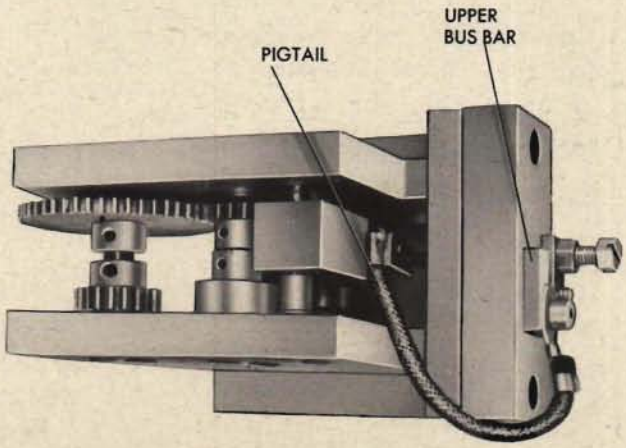

8 Make sure that the contacts are aligned. The screw in the bakelite arm can be used to align the contact assembly with the adjustable contact.

9 Adjust the contact gap and tighten the locking nut.

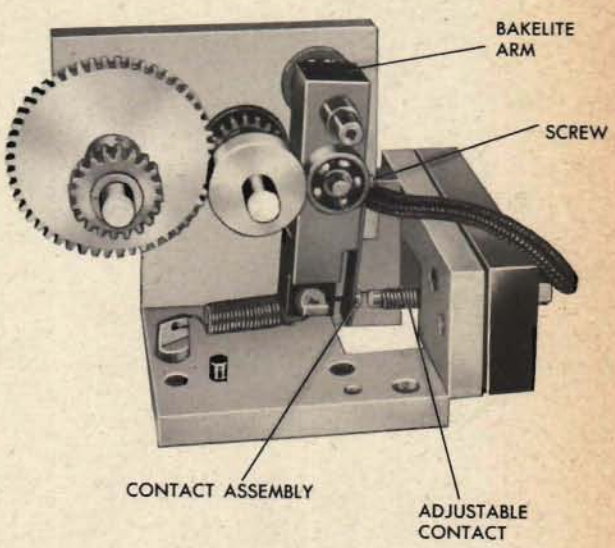

Bench checking the contact interrupter

1 The bearings and gears should be lubricated with an approved lubricant.

2 The gears should turn freely.

3 The contacts should touch each other squarely.

4 The contact screw should be locked.

5 The spring should be hooked to both posts.

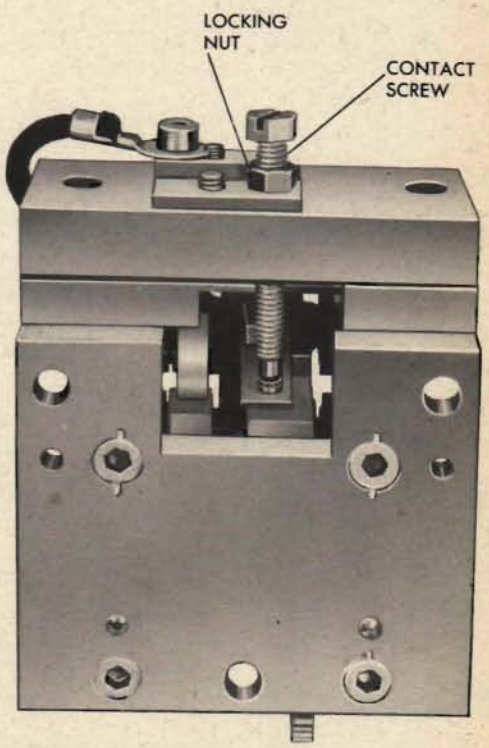

SIGNAL BUTTON

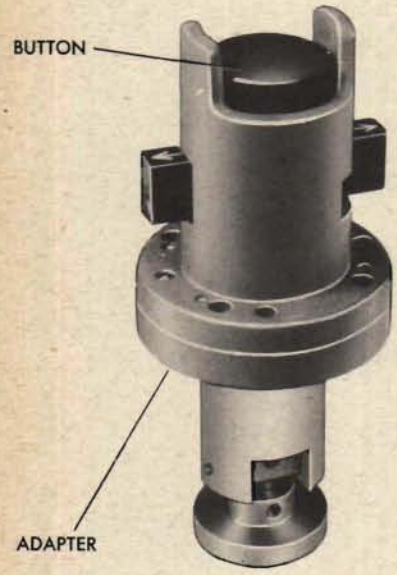

Typical symptoms

One or more of the following typical symptoms will indicate the source of trouble when the signal button does not operate properly.

JAMMING: The button cannot be moved.

STICKING: The button resists moving past certain points, or it operates sluggishly.

FAILURE TO RETURN: The button or sleeve, even though free to move, does not spring back to normal position.

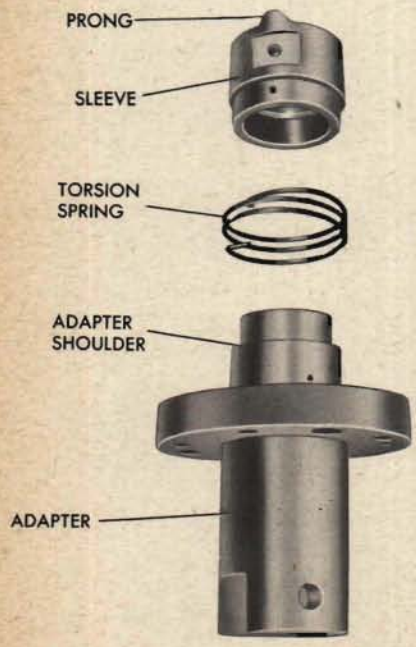

Locating the cause

Jamming or sticking may be caused by dirt in the adapter or between moving parts.

A burred or bent shaft may cause sluggish movement or binding of the button. Binding of the sleeve may occur if the torsion spring wrapped around the sleeve gets caught between the sleeve and the adapter shoulder.

If the sleeve feels sluggish when being turned, it may be seizing on the adapter due to inadequate lubrication. If the sleeve fails to spring back after being turned, the torsion spring may be unhooked.

Disassembling the signal button

1 Remove the two arms which form the sleeve.

2 Separate the guard from the adapter by removing the flat-head screws. For convenience in reassembly, scribe the guard and the adapter before separating them.

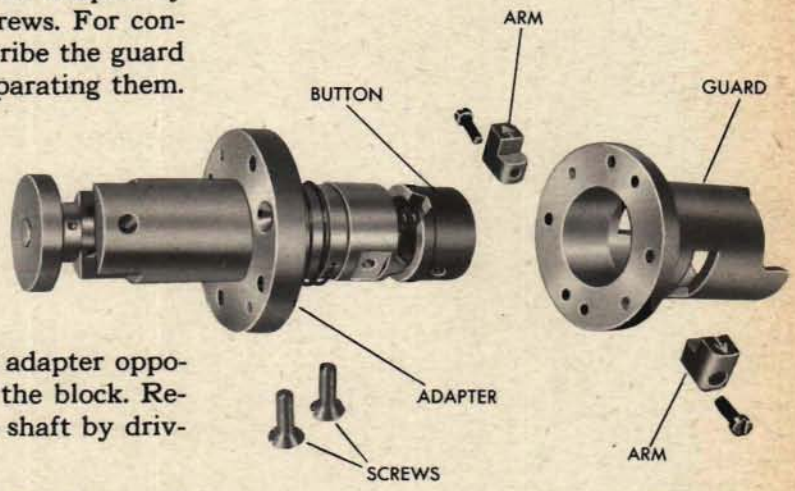

3 Put a scribe mark on the adapter opposite the set-screw hole in the block. Remove the button from the shaft by drivout the taper pin.

4 Remove the washer and the long coil spring from the shaft.

5 Slide the shaft with the disk and the block out of the adapter.

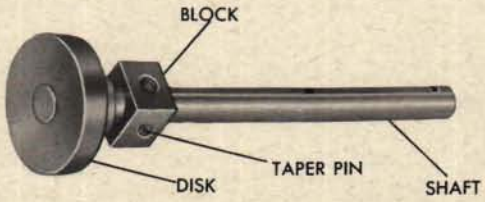

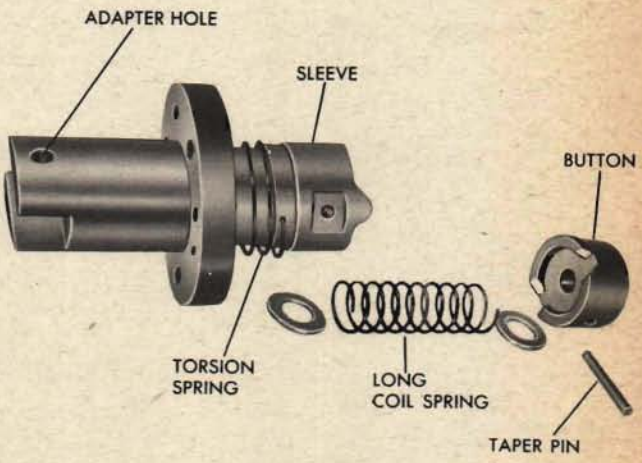

6 Drive out the taper pins to remove the disk and block.

7 Remove the sleeve by unhooking the torsion spring from the hole in the sleeve.

8 Take the other washer out of the adapter.

9 Remove the torsion spring from the adapter by taking the long hook out of the hole.

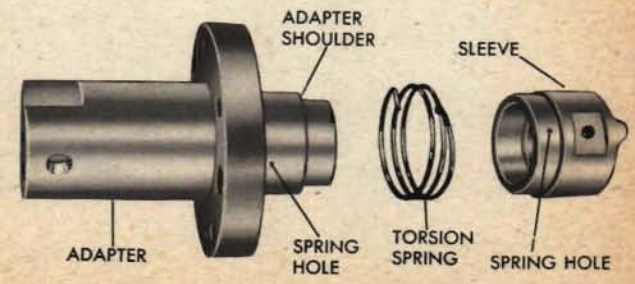

Repairing the parts

Disassembly is usually required, since most of the trouble in the signal button results from binding.

Cleaning and repairing the parts

The parts should be cleaned with an approved solvent to remove any dirt and to permit the detection of burrs. Burrs should be removed, and the parts then polished. A new spring can be made if the torsion spring is damaged and the sleeve is not returning properly.

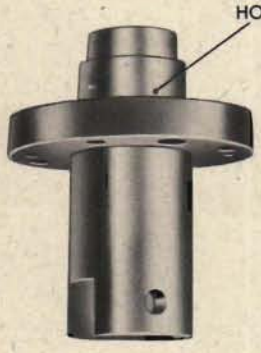

Lubrication

All parts should be lubricated with an approved lubricant before reassembly.

Reassembling the signal button

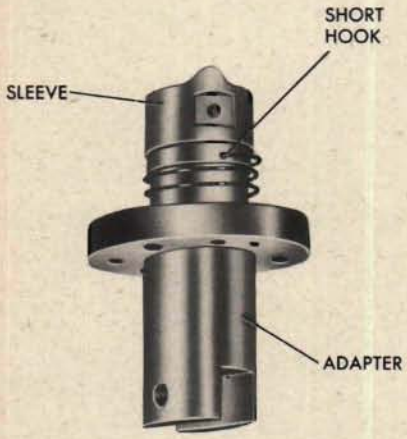

1. Replace the torsion spring, putting the long hook in the hole in the adapter.
2. Push the spring down and remount the sleeve. *Lubricate the inside and outside of the sleeve and the adapter.*
3. Put the short hook in the hole in the sleeve. The sleeve should seat on the adapter shoulder and *not* on the spring coil.
4. Repin the block and disk to the shaft and stake the pins. Lubricate the shaft and mount it in the adapter, using the mark made during disassembly as a guide.

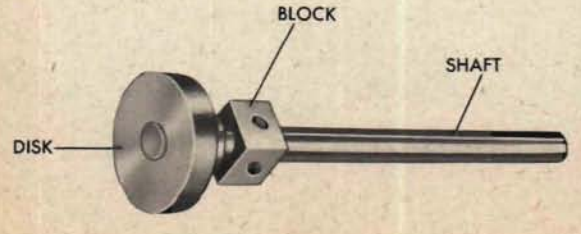

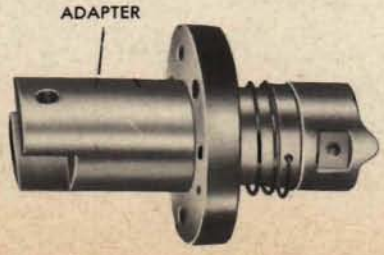

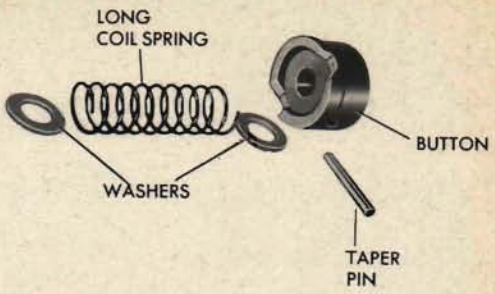

5 Put the washer on the shaft.

6 Put the long coil spring on top of the washer.

7 Replace the other washer and the button. Drive in the taper pin and stake it.

8 Replace the guard and one arm as follows: Hold the adapter and pull the disk down. Wedge the fingers between the adapter and the disk. Revolve the sleeve and pull down the disk until the prong of the sleeve is seated in the notch of the button. *Be sure that the torsion spring is in the correct position.* Holding the parts in this position, *replace the guard,* and remount one of the arms.

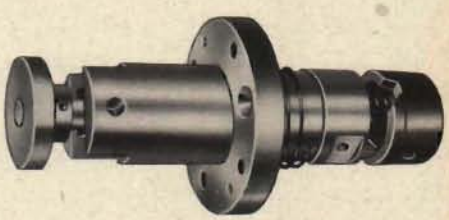

9 Remount the other arm.

10 Secure the adapter and guard with the two flat-head screws, and stake the screws.

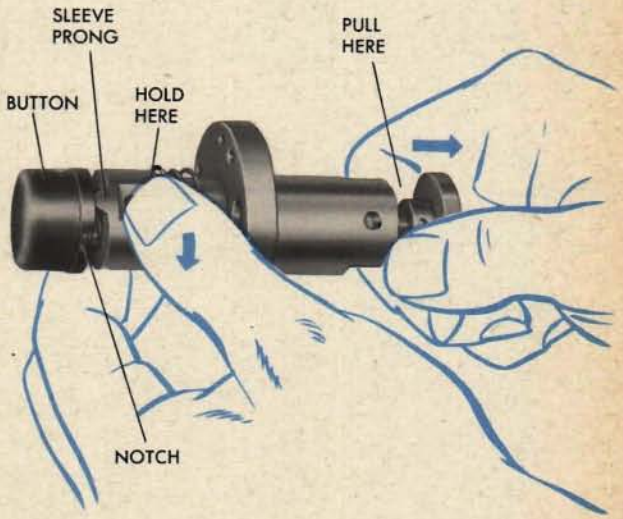

Bench checking the signal button

1 The arms should turn easily through their full travel to the point where they strike against the limits of the cutout section in the guard. Then, when released, the arms should spring back to the opposite limits of the cutout section.

2 It should be possible to push the button down ⅛ inch with the arms in the normal (time of flight) position and ¼ inch when they are turned clockwise (spotted salvo position).

3 The button and the arms should spring back to the normal position when released.

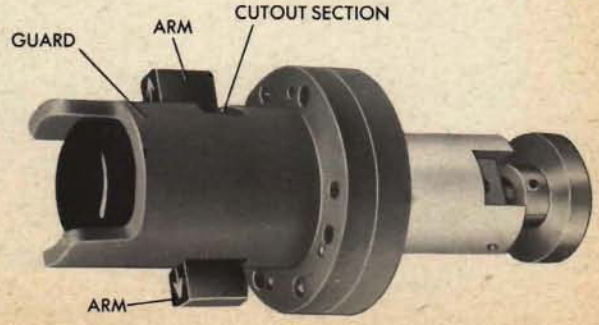

THE SOLENOID LOCK AND CLUTCH

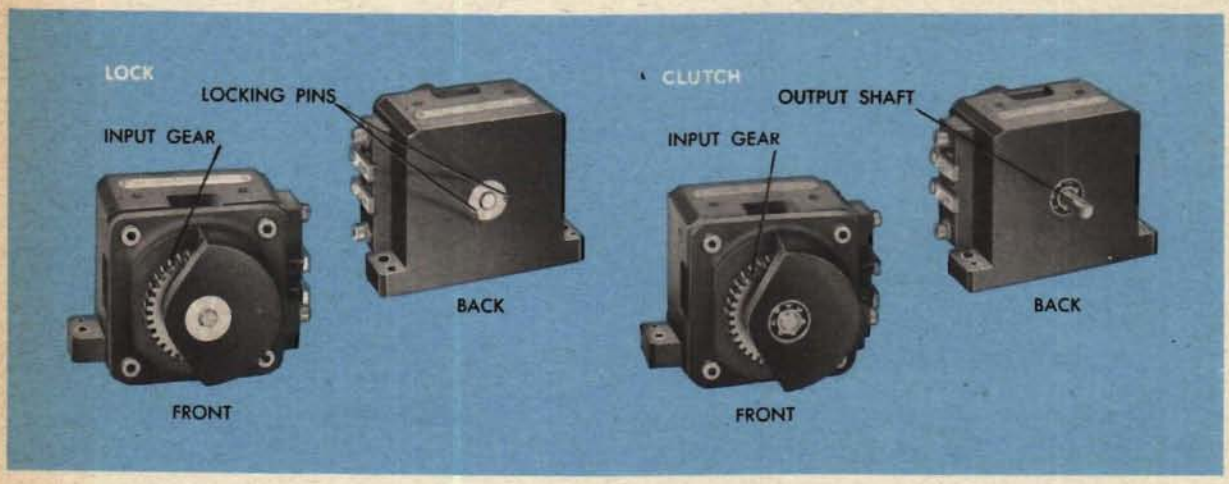

A solenoid lock is used to prevent a shaft line from turning. *A solenoid clutch* connects and disconnects a shaft line.

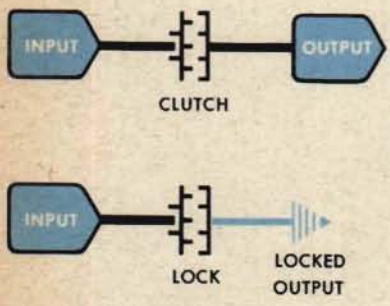

The chief difference between them is that one jaw of the lock is fixed to the unit housing, while both jaws of the clutch are free to turn. Since the two units may develop similar troubles, they are discussed together.

When the clutch is engaged, the clutch output line is connected to the input line. When it is open, or not engaged, the output line is not connected to the input line and is not driven, even though the input line continues to turn.

When the lock is energized, its jaws engage and the shaft line is prevented from turning.

Checking operation within the instrument

It is assumed in this check within the instrument that the shaft lines are free.

With the power ON and the input shaft turning, energize the unit. When energized, a lock must prevent a line from turning. A clutch should drive an output line when the clutch input line is turned.

Turn the power OFF. The lock or clutch should then disengage.

Slipping may be checked when the unit is energized. If it is slipping, the unit may sound like a ratchet device. If the locking pins are sheared, a lock may make a scraping sound.

A unit may sound noisy for other reasons, but still function normally. Noise usually indicates that trouble is developing, however. If the cause is not eliminated, the unit may develop trouble within a short time.

Typical symptoms

Sometimes failure of a unit may be traced to faulty wiring, a faulty push-button switch, or a lack of power to energize the unit.

If the input shaft line, the switch, and the input wiring are normal, a solenoid lock or clutch may behave abnormally in one of four ways:

The unit may fail to engage.
The unit may engage, but slip.
The unit may engage, but fail to release.
The unit may be noisy.

Locating the cause

Failure to engage

If the unit fails to engage, the trouble may be due to one or more of these causes:

Open or defective solenoid coil. Replace the solenoid coil or replace the unit.
Rusted or dirty pins in the sliding half of the lock or clutch, or dirt in the pin track. The pins should be cleaned. Earlier models of locks and clutches use steel balls instead of pins. In units of this type, replace the balls with pins.
Improperly adjusted pronged spring. Disassemble the unit and adjust the spring. This spring has two functions. It aids the small coil springs in separating the jaws of the clutch, and at the same time it acts as a shading coil to reduce the noise caused by the 60-cycle pulsation.
In a lock, the locking pins may have sheared off or fallen out. Disassemble the unit and replace the locking pins.

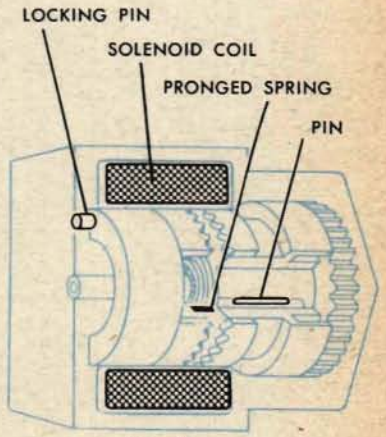

LOCK

Slipping

A lock or clutch may engage but slip if it has one of the following troubles:

Rusted pins. Clean or replace the pins.
Dirt in the pin track. Clean the pins and track.
Improperly adjusted pronged spring. Disassemble the unit to adjust the spring.
Overloaded or jammed output line. Refer to the instrument OP.

Failure to release

A lock or clutch which does not release may have one or more of these troubles, all of which require disassembly:

Rusted pins. Clean or replace the pins.
Dirt in the pin track. Clean the pins and the track.
Weak or rusted coil springs. Replace the springs.
Improperly adjusted pronged spring. Adjust the spring.

Noisy unit

If the unit is noisy, check for these troubles:

Improperly adjusted pronged spring. Disassemble the unit and adjust the spring.

Poor alignment of parts. Disassemble the unit and realign the parts.

Sticking clutch teeth. Disassemble the unit and clean the teeth.

Overloading. If the output shaft line is overloaded, the teeth of one jaw may slip on those of the other and force the shifting mechanism back along the shaft. Consult the instrument OP.

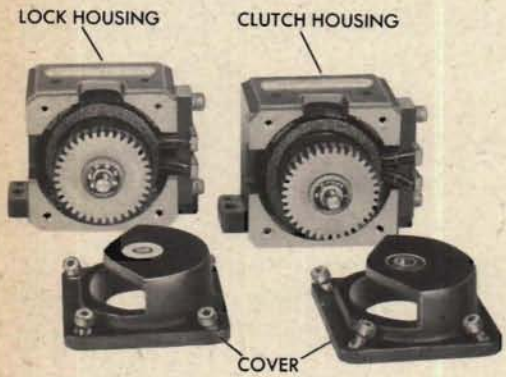

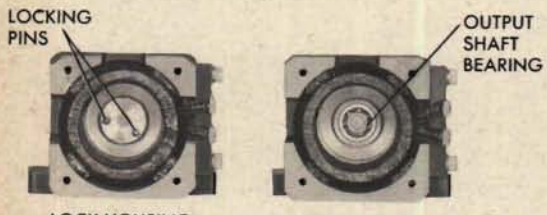

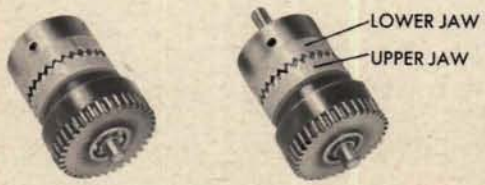

CLUTCH MECHANISM

Disassembling and repairing the units

1 Remove the cover from the housing.

2 Lift out the clutch mechanism and the shaft. The clutch mechanism consists of the lower hub and jaw, the spacer and the pronged spring, and the shifting mechanism. All these parts are free on the shaft except the lower hub and jaw which are pinned to the shaft.

3 To check the shifting mechanism, pull it apart slightly and allow it to snap back together. This action must be free. If the mechanism sticks, it requires cleaning or polishing.

4 Check further by holding the clutch jaw in one hand and pulling out the gear and turning it. While turning it, press the gear back against the jaw. The gear should slide into place easily without sticking. If the movement is sticky, the pins may be dirty, rusted or worn. Test for excessive lost motion by turning the gear back and forth in the hub. New pins must be used if the lost motion is excessive.

5 To disassemble the shifting mechanism, hold it with the clutch teeth facing downward. Use a thin rod inserted through the top bearing to tap the lower bearing out of place. Rest the rod on the outer race of the lower bearing and move it to a different point on the race after each tap. When removing this bearing, be sure not to damage it. Save the springs, pins, and retainer.

6 Before separating the gear from the hub, mark each part so that the pin holes can be matched during reassembly.

7 Pull the gear from the hub. If the two parts are stuck together, it may be necessary to drive them apart.

8 Wash out the pin slots. Run a pencil point along the slots to feel for roughness. Rough spots may be smoothed out by polishing. Use a piece of fine sandpaper wrapped once around a 0.100 inch rod.

9 Excessive lost motion may be caused by worn pins or slots. New pins should be made of a stainless-type steel or of phosphor bronze, 0.750 inch long and slightly over 0.125 inch in diameter. Polish the pins to size so that they fit smoothly. Wash the parts in solvent before inserting the pins.

10 Refit the gear in the hub and insert the three pins.

11 Put a drop of oil on each pin.

12 Pull the hub about ¼ inch away from the gear. Holding the hub in one hand, turn the gear with the thumb of the other hand. While still holding this load on the gear, press the gear in toward the hub. It should slide in fairly easily if the surfaces are smooth and there is not too much lost motion between the gear, hub, and pins.

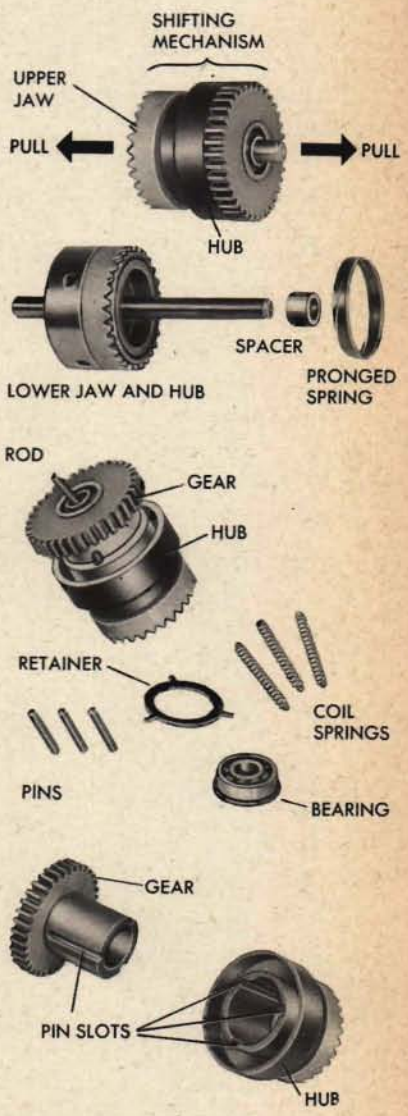

Reassembling the unit

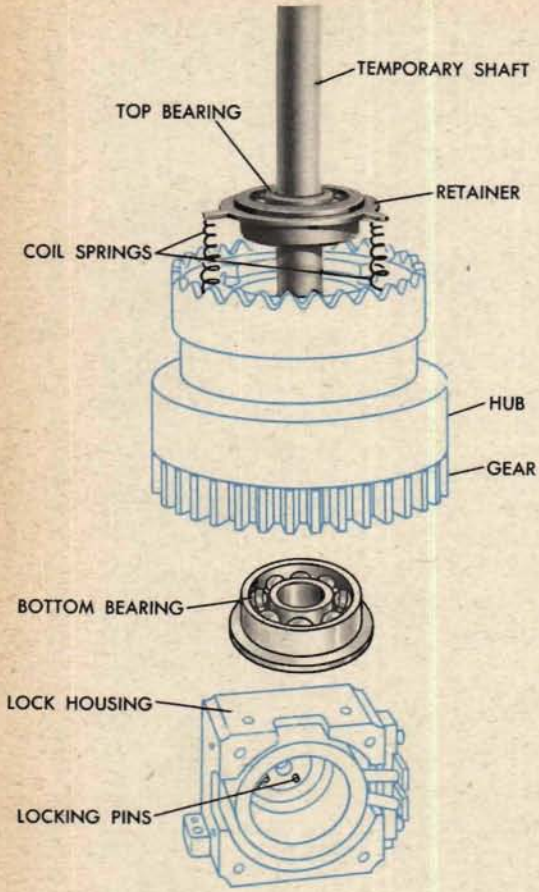

When the gear slides into the hub freely, proceed with assembly. Make sure that all bearings are clean and free.

1. Replace the bottom bearing in the hub.
2. Insert a rod or temporary shaft through the hub and gear, and through the bottom bearing.
3. Insert the three coil springs.
4. Put the top bearing in the retainer.
5. Slide the bearing over the shaft, aligning the retainer fingers with the springs. Press the bearing down until it holds. If the retainer is permitted to turn, the springs will fly out.
6. Remove the temporary shaft.
7. In a lock, check the locking pins in the housing to be sure they are not missing, bent, or sheared off.

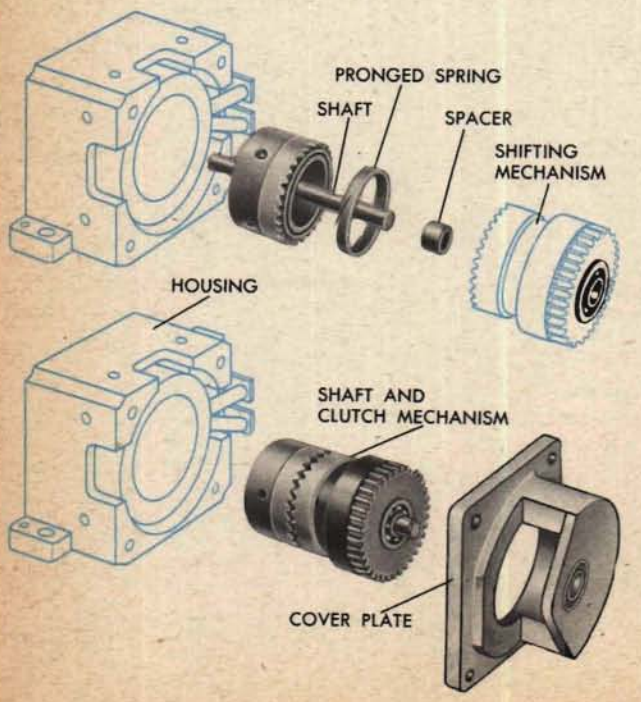

8. Fit the pronged spring into the lower hub with the prongs down. The spring should be free in its groove.
9. Fit the spacer on the shaft.
10. Oil the bearings and the shifting mechanism.
11. Slide the shifting mechanism on the shaft.
12. Insert the shaft and clutch mechanism in the housing.
13. Replace the cover plate and fasten it with four screws.

Adjusting the unit

1 Energize and de-energize the solenoid several times. If the unit clicks when the power is turned OFF, the unit is engaging and disengaging properly.

2 If the unit does not disengage when the power is OFF, the prongs on the spring may not be bent out far enough.

3 If the unit chatters when the power is ON, the spring prongs may be bent out too far. To eliminate the chatter, remove the spring and carefully bend the prongs in about 0.005 inch.

4 If the unit sticks in its energized position, bend the prongs out equally.

5 When the unit engages and disengages properly, energize the coil again and turn the gear. If the unit hums, remove the spring and smooth the solid end of it with sandpaper on a flat plate. Again reinstall and recheck. Continue alternately sanding the back of the spring and bending the prongs until the hum is negligible.

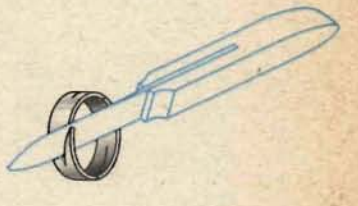

ADJUSTING SPRING PRONGS

Bench checking the unit

To simulate conditions of operation, turn the power ON and put a load on the unit by trying to turn the gear. In checking a clutch, fasten a bakelite clamp to the output shaft to prevent its turning. Keeping the load on, turn the power OFF. The mechanism should now release.

If it does not release, the spring prongs may not have been bent out far enough, or the shifting mechanism may not have been adjusted to eliminate sticking.

THE SOLENOID SIGNAL

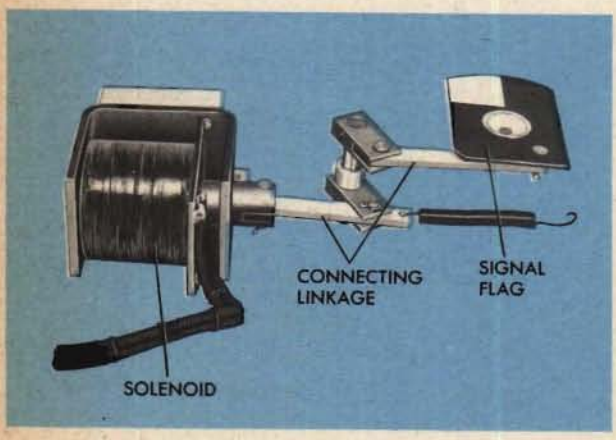

The complete solenoid signal consists of a signal flag, a connecting linkage, and a solenoid which is controlled by a remote switch.

The parts of a solenoid signal are built into the gearing unit of the dial group to which it is related. The signal flag itself is visible through an opening in the dial mask. Since the solenoid signal cannot be removed from the instrument as a separate unit without disturbing other units, the trouble should be accurately located and an attempt made to effect repairs with the least possible amount of disassembly.

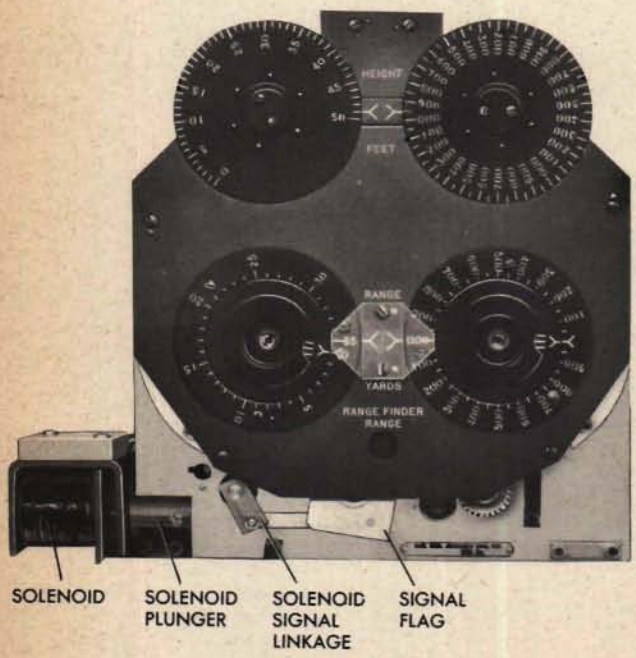

Typical symptoms

The solenoid signal may develop either electrical or mechanical trouble. If it is noted that the signal is not operating properly, look for the following typical symptoms.

JAMMING: When the solenoid is energized or de-energized, the plunger does not move.

STICKING: When the solenoid is energized or de-energized, the plunger resists the action of the solenoid or of the spring.

SLIPPING: Movement of the plunger does not move the signal flag, or the plunger will not move out of the solenoid when the solenoid is de-energized.

ELECTRICAL TROUBLE: The solenoid does not energize properly when the circuit is closed.

Locating the cause

Jamming or sticking

Jamming or sticking may cause complete failure of a solenoid signal or cause it to operate erratically or noisily. If the solenoid signal appears to be jamming or sticking, unhook the spring from the linkage and try to move the linkage back and forth by hand. If this does not reveal the source of trouble, disconnect the plunger from the linkage by removing the clevis pin which joins them. Swing the linkage aside and try each part separately. If both the plunger and the linkage are free after being separated, probably the solenoid is cocked or at the wrong height with respect to the linkage.

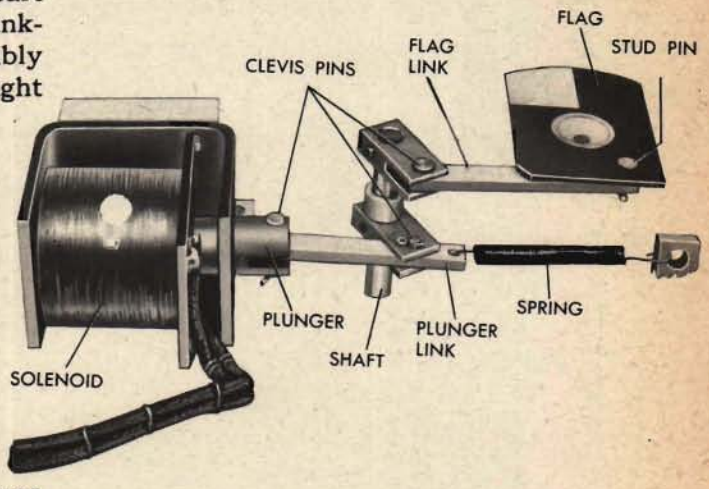

Besides a misaligned solenoid, the plunger may jam or stick because of dirt or oil inside the coil. Remove only the plunger to clean the inside of a coil, complete disassembly being unnecessary.

The linkage may jam or stick because of a frozen clevis pin, a dirty or damaged yoke, a bent link, a bent shaft, or a dirty or damaged bearing. A badly bent flag may also cause sticking or jamming by interfering with adjacent parts. Bearings can usually be cleaned, and yokes can be cleaned and polished in place, provided precautions are taken to protect the rest of the equipment. Bent links or shafts or parts which are otherwise damaged should be removed from the instrument for repair.

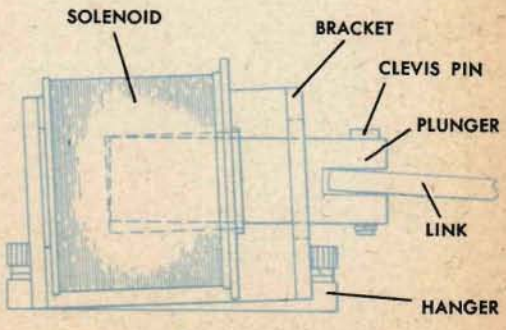

SOLENOID COCKED

The signal flag may fail to return to its normal de-energized position because of a weakened or unhooked spring. Before increasing the spring tension, be certain that the unit as a whole operates freely and that the spring *is* faulty, because excessive tension increases operating noise.

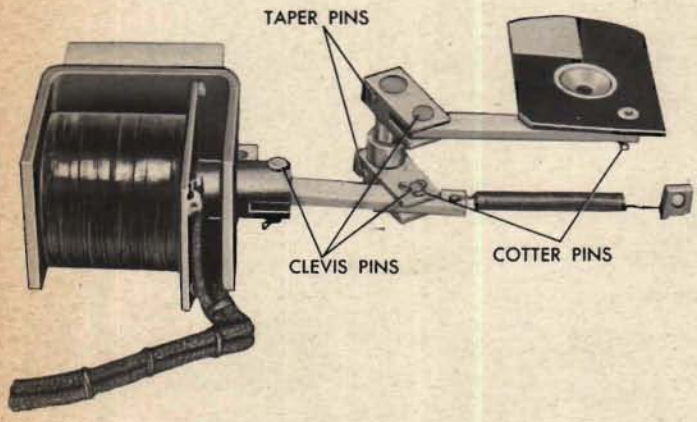

Slipping

If the signal does not move when the plunger is moved in and out of the solenoid, look for a missing taper pin or clevis pin. If a missing clevis pin is replaced, it should be fastened with a cotter pin.

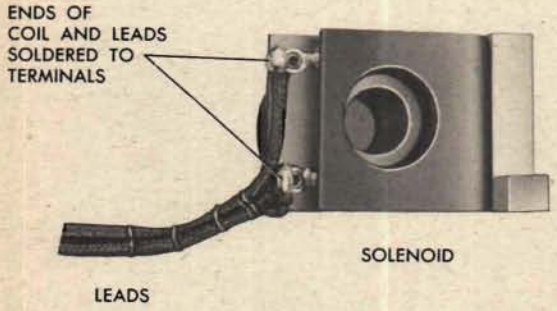

Electrical trouble

If the solenoid does not energize properly when the circuit is closed, look for a broken wire, a wire loose at the terminal, a broken coil wire at the terminal, an internal break in the coil, or a burned-out coil.

Examine the lead and coil connections at the terminal for breaks or looseness. A broken wire must be replaced and a loose wire repaired. Be sure that each of the two terminals is securely mounted. A loose or damaged terminal must also be repaired. Use an ohmmeter to check the coil for continuity. A coil with an internal break, or a burned-out coil, must be replaced. Follow the instructions given in the chapter on *Wiring*, page 384, in order to locate a break in the electrical circuit.

Disassembling the unit

As the solenoid signal is actually a part of another unit and disassembly of that unit upsets its adjustment to the instrument, the trouble should be isolated and if possible repaired in place. When a part must be removed for repair or replacement, if accessible it should be disassembled in the instrument. If the faulty part is inaccessible, the dial gearing unit will have to be removed and disassembled. The instrument OP should be consulted for instructions on removing the dial gearing unit.

If only the solenoid must be disassembled, separate it from the other parts of the solenoid signal by removing the cotter pin and clevis pin which fasten the plunger to the plunger link.

Unfasten the two screws which hold the solenoid hanger to its mounting plate. Disconnect the leads from the terminal block and carefully lift the solenoid out of the instrument.

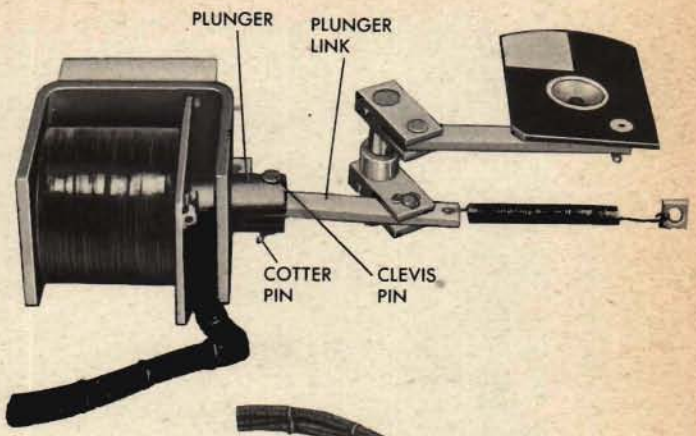

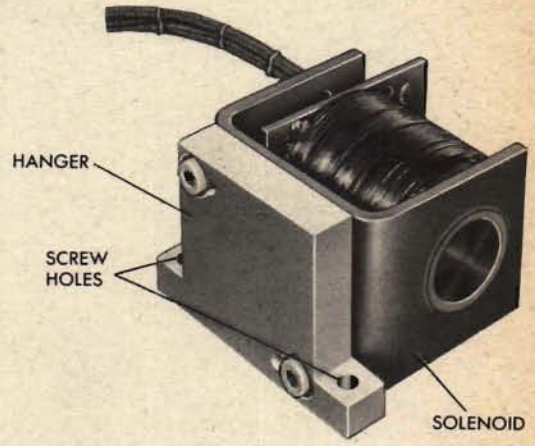

To disassemble the solenoid:

1 Pull out the plunger.

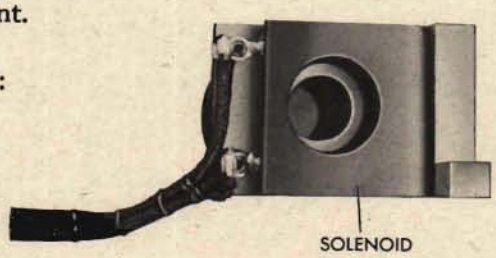

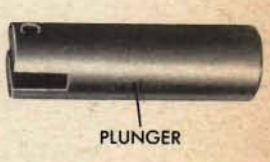

2 Remove the two screws which hold the solenoid bracket to the hanger and lift off the hanger.

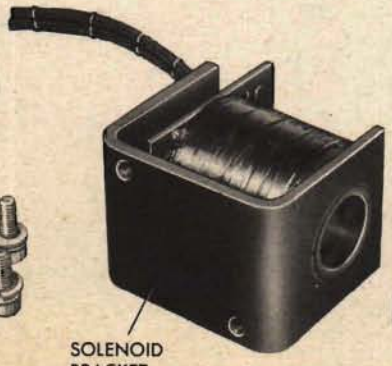

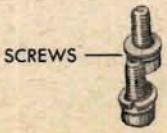

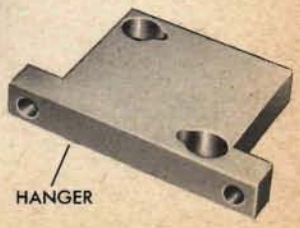

To disassemble the solenoid signal linkage:

1 Unhook the spring from the post and link.

2 Remove the three cotter pins.

3 Removal of the signal flag depends on the type of construction. Where the flag is mounted on a fixed stud, remove the snap ring and lift the flag off the stud. Where the flag hub is pinned to a bearing-mounted shaft, drive the taper pins out of the hub and collars and slide the shaft out of the parts.

4 Push out the two yoke pivot studs and separate the link from the yokes.

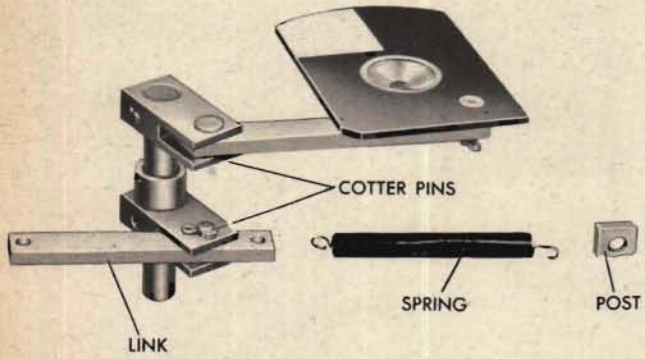

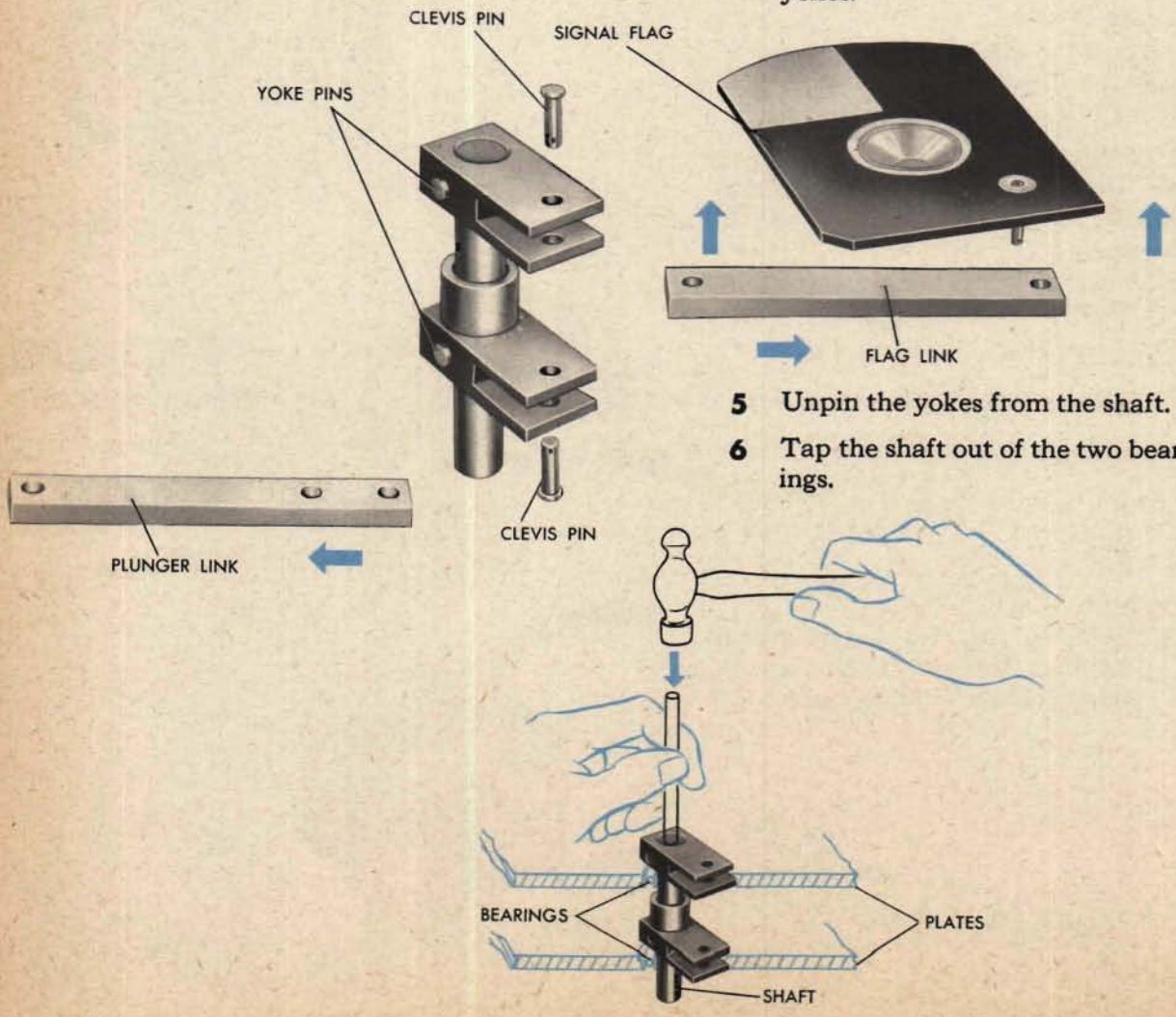

5 Unpin the yokes from the shaft.

6 Tap the shaft out of the two bearings.

Repairing the parts

Repairing a bent shaft or link

A badly bent or damaged shaft or link must be replaced. If it is only slightly bent, remove and straighten it. Before reassembly, smooth all surfaces by polishing. Keep trying the shaft in the yokes and bearings until a good fit is obtained.

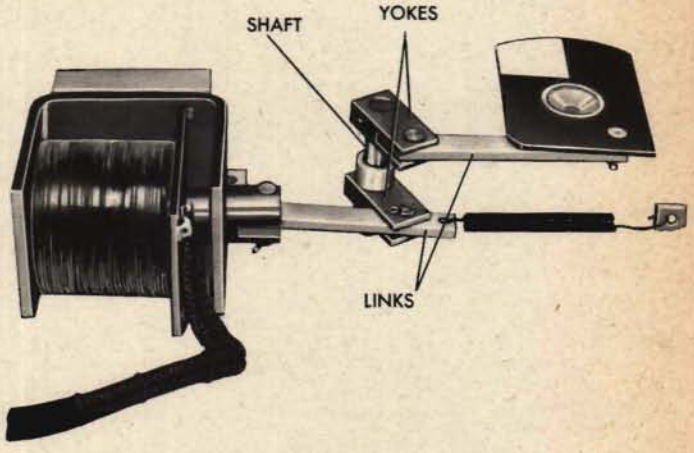

Aligning a cocked solenoid

Chattering in the solenoid usually means that the solenoid is cocked. To re-align a solenoid, first try to adjust the position of the metal bracket supporting the coil. Shift the metal bracket slightly on the hanger. If this does not align the solenoid, reposition the hanger.

If the solenoid still chatters, check to be sure that the bottom of the hanger sets squarely on the plate.

Never ream out the core in order to eliminate chattering.

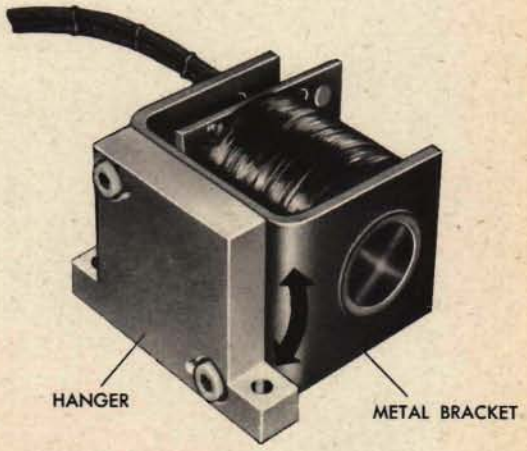

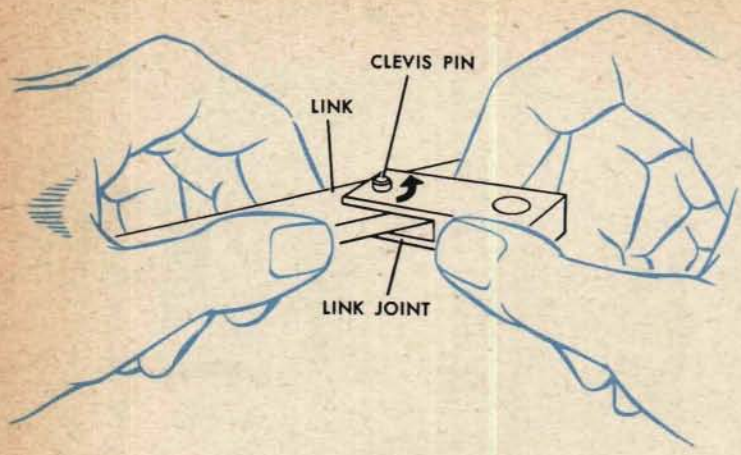

Repairing a link joint

Stiffness in a link joint may be caused by either of two faults: the link binding in the yoke slot, or the clevis pin binding in the hole. The four flat working surfaces of the joint may be freed by rubbing them on a fine flat file. Remove just enough metal to eliminate burrs and obtain a free fit. If a clevis pin binds, it should be polished to remove any roughness, and the hole should be cleared of score marks and burrs by means of the correct size of reamer.

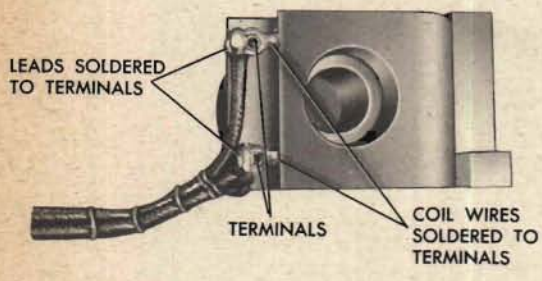

Repairing electrical parts

Electrical trouble can sometimes be repaired by disassembling the solenoid alone. A loose or open wire at a terminal can be repaired by resoldering it to the terminal. A loose terminal can be reriveted.

Never try to repair a coil with an internal break. A coil that is burned out or has an internal break must be replaced. Consult the chapter on wiring before making any electrical repairs.

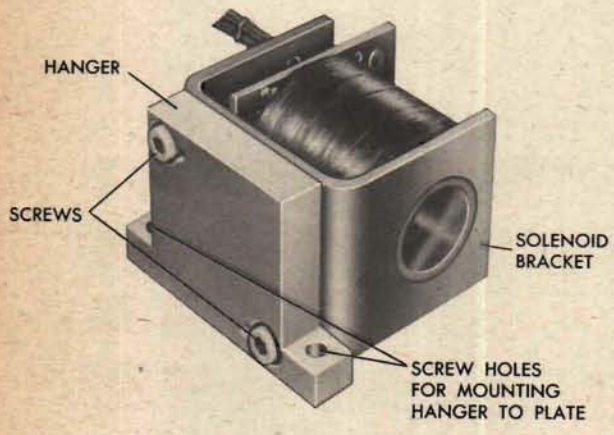

Reassembling the unit

1. Mount the solenoid bracket on the hanger and fasten the two screws.
2. Mount the solenoid in the instrument by fastening the screws which hold the hanger to the plate.
3. Mount the shaft through the two bearings in the plates and through the two yokes and spacer.
4. Pin the yokes to the shafts.

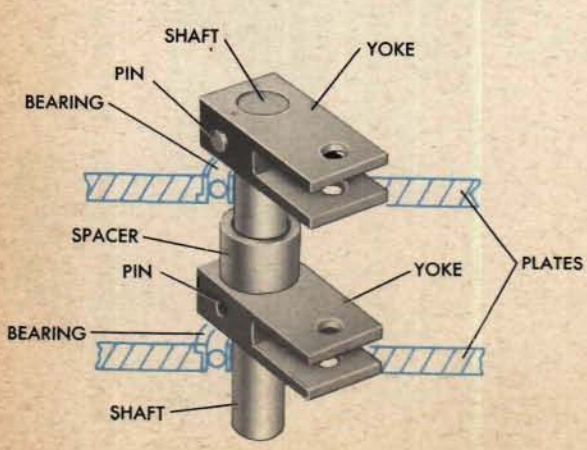

5 Join the flag and flag link and fasten them with the cotter pin.

6 Replace the signal flag and secure it.

7 Mount the other end of the flag link in its yoke. Install the clevis pin and the cotter pin.

8 Mount the plunger arm in the yoke. Install the clevis pin and the cotter pin.

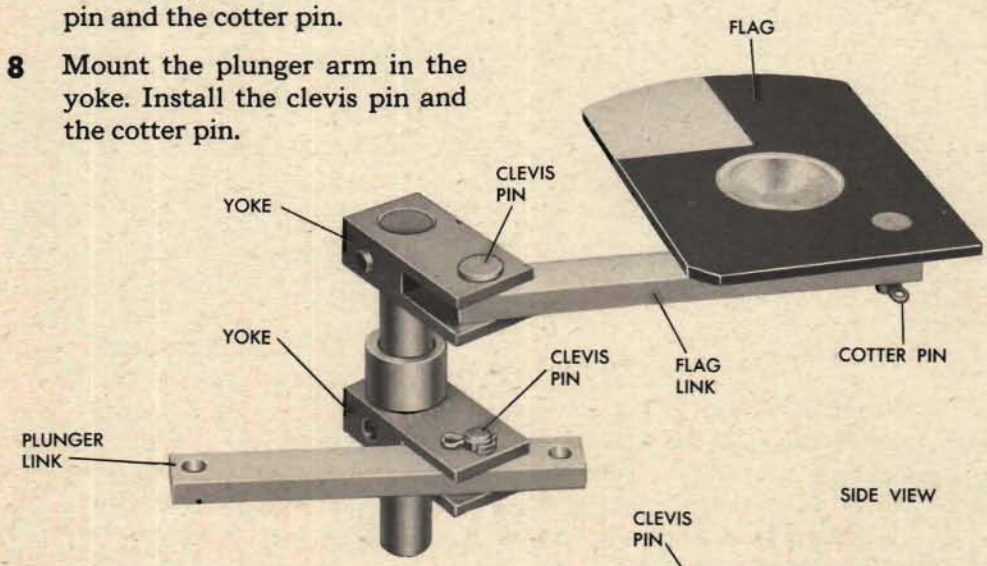

9 After the solenoid signal linkage has been mounted in the instrument, connect the plunger link to the plunger by installing the clevis pin and the cotter pin.

10 Fasten the spring to the post and to the plunger link.

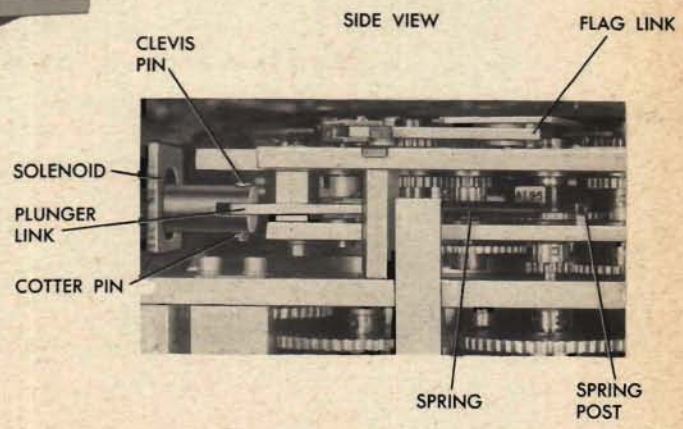

Bench checking the unit

1 The linkage must operate freely.

2 Check the wiring for continuity.

3 Test the solenoid action by supplying an independent 115-volt A.C. to the coil terminals. Do not mistake an a-c hum for chatter.

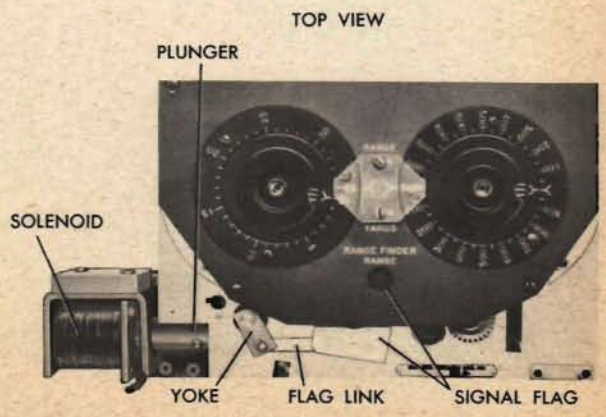

PAGES 556 to 561 are reserved for lubrication instructions. At the time of printing, various lubricants and methods were being tested at several Naval activities. Results of these experiments will be distributed as replacements for these pages.

PAGES 556 to 561 are reserved for lubrication instructions. At the time of printing, various lubricants and methods were being tested at several Naval activities. Results of these experiments will be distributed as replacements for these pages.

PAGES 556 to 561 are reserved for lubrication instructions. At the time of printing, various lubricants and methods were being tested at several Naval activities. Results of these experiments will be distributed as replacements for these pages.

PAGES 556 to 561 are reserved for lubrication instructions. At the time of printing, various lubricants and methods were being tested at several Naval activities. Results of these experiments will be distributed as replacements for these pages.

PAGES 556 to 561 are reserved for lubrication instructions. At the time of printing, various lubricants and methods were being tested at several Naval activities. Results of these experiments will be distributed as replacements for these pages.

PAGES 556 to 561 are reserved for lubrication instructions. At the time of printing, various lubricants and methods were being tested at several Naval activities. Results of these experiments will be distributed as replacements for these pages.

DISTRIBUTION

Requests for additional copies of OP 1140A should be submitted on NAVGEN 47, FORMS AND PUBLICATIONS REQUISITION, to the nearest Publications and Printing Office. Mailing addresses should be obtained from List 10 VV of the Standard Navy Distribution List.

DISTRIBUTION:

Standard Navy Distribution List No. 43 (Part 1) and Edition No. 3 (Part 2) to Catalog of Activities of the Navy.

2 copies unless otherwise noted.

1. A, B, D, E, F, H, K, L*; 2. F, G, H, I, S, U; 3. (3 copies), B, C, D, M, T, U, V, LLL, MMM; 3. (1 copy), X, Y, Z; 6. (1 copy), A; 7. (6 copies), D; 7. (15 copies), L, M; 7. (5 copies), P, S, T, SS, TT; 7. K, X, FFF, N*; 8. (15 copies), T-34, T-35, T-36, T-40, T-60; 8. (5 copies), CC; 10. (1 copy), N*; 10. (40 copies), VV; 11. A (5 copies), BuShips, CNO, BuPers; 12. A*.

*Applicable Addressees